Canon

PRO-2000

Online Manual

Printer Functions
Handling and Use of Paper
Changing Settings from Operation Panel/Web Browser
Printer Parts
Network Setting
Adjustments for Better Print Quality
Color Management
Maintenance and Consumables
Specifications
Safety
Basic Printing Workflow
Enhanced Printing Options
Windows Software
Mac OS Software
Managing Print Jobs
Troubleshooting
List of Support Code for Error

English

Contents

Using This Online Manual. 19

Trademarks and Licenses. 20

Search Tips. 29

Printer Functions. 31

- Connecting Device to Printer Directly via Wireless LAN (Direct Connection). 32
- Managing Printer Conveniently Using Quick Utility Toolbox. 33
- Available Connection Methods. 34
- Managing Printer Status Using Device Management Console. 37

Handling and Use of Paper. 38

- Paper. 40
  - Types of Paper. 41
  - Paper Sizes. 42
  - Using Paper Other Than Genuine Paper and feed confirmed Paper. 45
  - Printing on Paper Other Than Genuine Paper and feed confirmed Paper Using Existing Settings. . . . 46
  - Printing on Paper Other Than Genuine Paper and feed confirmed Paper by Adding a Media Type. . . . 47
  - Updating paper information. 48
- Handling rolls. 49
  - Loading Rolls on the Roll Holder. 50
  - Loading the Upper Roll on the Printer. 53
  - Loading the Lower Roll on the Roll Unit (Option). 58
  - Changing the Type of Paper. 63
  - Specifying the Paper Length. 66
  - Removing the Upper Roll from the Printer. 67
  - Removing the Lower Roll from the Roll Unit (Option). 70
  - Removing Rolls From the Roll Holder. 73
  - Feeding Roll Paper Manually. 75
  - Keeping Track of the Amount of Roll Paper Left. 76
  - Specifying the Ink Drying Time for Rolls. 77
  - Specifying the Cutting Method for Rolls. 80
  - Cutting the Leading Edge of Roll Paper Automatically. 88
  - Reducing Dust from Cutting Rolls. 90
  - Automatically Switch Rolls. 92

Handling sheets. 93
Loading Sheets in the Printer. 94
Printing From a Desired Starting Point. 98
Removing Sheets. 101
Basket. 103
Parts of the Basket. 104
Using the Basket. 105
Example Basket Configurations. 108
Storing the Basket. 112
Roll Unit. 114
Parts of the Roll Unit. 115
Roll Unit. 117
Switching Roll Unit Modes. 118
Using the Roll Unit In Take-Up Mode. 120
Removing Printed Paper from the Roll Unit. 129
Changing Settings from Operation Panel/Web Browser. 133
Operations and Touch Screen. 134
Operation Panel. 135
Touch Screen. 137
Checking Instructions During Printer Operations. 140
Changing Settings from Operation Panel. 142
Printer Menu Operations. 143
Menu Operations. 144
Menu Structure. 149
Changing Settings from Operation Panel. 162
Setting Items on Operation Panel. 164
Job management. 165
Test print. 166
Print settings. 167
LAN settings. 168
Device user settings. 177
Language selection. 179
Paper-related settings. 180
Auto maintenance settings. 182

Administrator password setting. 183
Setting Administrator Password on Operation Panel. 184
Hard disk settings. 186
Special administration mode. 187
Printer information. 188
Status Print. 189
Changing Printer's Setting Using Web Browser. 192
Changing Settings Using Web Browser. 193
Changeable Setting Items Using Web Browser. 196
Setting Password. 198
Registering Printer's Root Certificate to Web Browser. 200
Setting Mail Server. 204
Receiving Printer Status by E-mail. 206
Printer Parts. 208
Printer Parts. 209
Front. 210
Back. 212
Top Cover (Inside). 213
Carriage. 214
Ink Tank Cover (Inside). 215
Hard Disk. 216
Printer Hard Disk Operations. 217
Checking Free Hard Disk Space. 218
Erasing Data on Printer's Hard Disk. 219
Optional accessories. 220
Roll Holder Set. 221
Stand. 222
Stand Parts. 223
Roll Unit. 224
Network Setting. 225
Network Connection Tips. 226
Default Network Settings. 227
Another Printer Found with Same Name. 229

Connecting to Another Computer via LAN/Changing from USB to LAN Connection. 230
Printing Network Settings. 231
Changing LAN Connection Method/Changing Wireless LAN Connection Method (Windows). 247
Changing Network Settings Using Remote UI. 249
Sharing the Printer on a Network (Mac OS). 250
Settings on Print Server. 251
Settings on Client PC. 252
Restrictions on Printer Sharing. 253
Connecting Smartphone/Tablet to Printer via Wireless LAN. 254
Connecting Smartphone/Tablet to Printer via Wireless LAN Router. 255
Adjustments for Better Print Quality. 257
Adjusting the Print Head. 258
Adjusting the Print Head. 259
Automatic Adjustment to Straighten Lines and Colors. 260
Manual Adjustment to Straighten Lines and Colors. 262
Troubleshooting Paper Abrasion and Blurry Images. 264
Adjusting Feed Amount. 266
Adjusting Feed Amount. 267
Selecting Feed Amount Adjustment Method. 268
Automatic Banding Adjustment. 269
Manual Banding Adjustment. 271
Fine-Tuning Paper Feed Amount. 273
Adjusting Line Length. 274
Adjusting Vacuum Strength. 276
Color Management. 277
Color Calibration. 278
Managing Colors. 279
Performing Color Calibration. 281
Adjustment Types of Color Calibration. 284
Maintenance and Consumables. 287
Ink Tanks. 289
Ink Tanks. 290

Replacing Ink Tanks. 292
Checking Ink Tank Levels. 304
When to Replace Ink Tanks. 306
Print Head. 307
Print Head. 308
Checking for Nozzle Clogging. 309
Cleaning the Print Head. 311
Replacing the Print Head. 314
Maintenance Cartridge. 322
Maintenance Cartridge. 323
Replacing the Maintenance Cartridge. 324
Checking the Remaining Maintenance Cartridge Capacity. 329
When to Replace the Maintenance Cartridge. 330
Cutter Blade. 331
Cutter Blade. 332
Replacing the Cutter Blade. 333
Performing Maintenance Functions from Your Computer (Mac OS). 337
Cleaning the Print Heads. 338
Printing a Nozzle Check Pattern. 340
Adjusting the Paper Feed Volume. 342
Cleaning the Printer. 343
Cleaning the Printer Exterior. 344
Cleaning Inside the Top Cover. 346
Cleaning the Roll Unit. 349
Other Maintenance. 350
Preparing to Transfer the Printer. 351
Reinstalling the Printer. 357
Specifications. 362
Printer Specifications. 363
Specifications. 364
Print Area. 369
Safety. 371

Safety Precautions. 372
Regulatory Information. 373
WEEE (EU&EEA). 375
Basic Printing Workflow. 387
Printing procedure. 388
Printing Options Using Rolls and Sheets. 389
Turning the Printer On and Off. 391
Loading and Printing on Rolls. 394
Loading and Printing on Sheets. 397
Printing in Windows. 399
Printing from Mac OS. 401
Canceling print jobs. 403
Canceling Print Jobs from the Control Panel. 404
Canceling Print Jobs from Windows. 405
Canceling Print Jobs from Mac OS. 407
Pausing Printing. 408
Pausing Printing. 409
Enhanced Printing Options. 410
Printing from Computer (Mac OS). 414
Printing with Easy Setup. 416
Setting the Number of Copies and Printing Order. 422
Using Roll Unit to Use 2-Level Rolls. 424
About 2-Level Roll Switching. 425
Setting the Paper Rolls in the Printer According to the Intended Use. 426
Printing by Automatically Switching Upper-level and Lower-level Roll Papers. 428
How to Switch Paper Rolls. 431
Reflect Roll Unit Settings in the Printer Driver. 436
Changing the Print Quality and Correcting Image Data. 437
Adjusting Color Balance. 438
Setting the Print Quality Level (Custom). 440
Printing a Color Document in Monochrome. 441
Adjusting Tone. 442
Specifying Color Correction. 445

Optimal Photo Printing of Image Data. 447
Adjusting Colors with the Printer Driver. 448
Printing with ICC Profiles (Specifying an ICC Profile from the Application Software). 450
Printing with ICC Profiles (Specifying an ICC Profile from the Printer Driver). 452
Interpreting the ICC Profile. 453
Adjusting Brightness. 454
Adjusting Contrast. 456
Scaled Printing. 458
Printing to Oversized Paper Sizes. 460
Setting Paper Dimensions (Custom Size). 462
Print Area. 463
Prints without Edges Based on the Scenarios. 465
Printing without Margins to Match Roll Paper Width. 466
Printing Full-Size without Margins. 469
Changing the Clear Coating Settings. 472
Printing Hanging and Horizontal Banners (Large-Format Printing). 474
Printing by Dividing/Joining Documents. 476
Lining Up and Printing Multiple Documents. 477
Printing by Connecting Multiple Pages. 478
Printing Multiple Pages All on One Page. 480
Printing Document in Center of Paper. 482
Printing by Saving Roll Paper. 484
Saving Roll Paper by Rotating Document 90 Degrees. 485
Saving Roll Paper by Eliminating Upper and Lower Margins on Document. 486
Switching the Paper Source to Match the Purpose. 487
Cutting Roll Paper after Printing. 489
Printing from Printer. 490
Printing from USB Flash Drive. 491
Printing Data Saved on USB Flash Drive. 492
Setting Items for Printing Using Operation Panel. 495
Printing from Smartphone/Tablet. 496
Connecting Smartphone/Tablet to Printer Directly via Wireless LAN (Direct Connection). 497
Windows Software. 501
Mac OS Software. 502

Printer Driver. 503
Overview of the Printer Driver. 504
Canon IJ Printer Driver. 505
Checking Layout in Preview before Printing. 506
Registering a Changed Printing Profile. 507
How to Open the Printer Driver Setup Window. 509
Page Setup Dialog. 510
Print Dialog. 511
Updating Media Information in Printer Driver. 513
Correcting Media Information in Printer Driver (When Printer Used in Shared Environment). . . . 515
Confirm the Printer Paper Information. 516
Setting Accounting Information. 517
Deleting the Undesired Print Job. 518
Display the Printing Status Screen. 519
Canon IJ Printer Utility3. 520
Opening the Canon IJ Printer Utility3. 521
Checking the Ink Status from Your Computer. 522
Instructions for Use (Printer Driver). 523
Description of Print Dialog. 524
Quality & Media. 525
Color Options. 527
Paper Detailed Settings. 530
Page Processing. 533
Additional Settings. 535
Specifications. 536
Updating the Printer Driver. 537
Obtaining the Latest Printer Driver. 538
Delete the Unnecessary Canon IJ Printer from the Printer List. 539
Before Installing the Printer Driver. 540
Installing the Printer Driver. 541
Managing Print Jobs. 542
Checking Print Job Information. 543
Basic Print Job Operations. 544
Using Printer Hard Disk. 545
Saving Print Jobs on Printer Hard Disk. 547

Managing Job Queue (Deleting or Preempting Other Jobs). . . . 550
Managing Pending Jobs (Printing or Deleting Jobs on Hold). . . . 553
Printing Saved Jobs. . . . 555
Deleting Saved Jobs. . . . 559
Moving Saved Jobs. . . . 562
Advanced Print Job Operations. . . . 565
Saving Print Jobs Sent from Sources Other than Printer Driver. . . . 566
Printing without Saving Jobs in Common Box. . . . 568
Setting Passwords for Personal Boxes. . . . 569
Naming Personal Boxes. . . . 571
Displaying List of Saved Jobs. . . . 574
Printing List of Saved Jobs. . . . 576
Displaying Details of Saved Jobs. . . . 577
Renaming Saved Jobs. . . . 580
Printer Hard Disk Operations. . . . 217
Checking Free Hard Disk Space. . . . 218
Troubleshooting. . . . 585
I want to easily create vertical or horizontal banners.. . . . 588
Does this printer support sub-ink tank system?. . . . 589
I want to know how to configure roll cutting.. . . . 590
I want to configure so that the roll is cut automatically after waiting for the ink to dry.. . . . 591
I want to print borderless (without a border). . . . 592
I want to know the paper types that can be used in this printer.. . . . 593
The paper type that I want to print is not displayed on the Touch Screen.. . . . 594
What type of function is color calibration?. . . . 595
Can I perform duplex printing?. . . . 596
I want to perform enlargement printing.. . . . 597
Problems Regarding Paper. . . . 598
Clearing Jammed Roll Paper. . . . 599
Clearing a Jammed Sheet. . . . 604
Roll paper cannot be inserted into the Paper Feed Slot. . . . 608
Paper cannot be fed automatically. . . . 609
Cannot load sheets. . . . 610
Paper is not cut straight. . . . 611
Paper is not cut. . . . 613

The size of clear film cannot be detected. 614
Margins are wide. 615
When printing on roll paper, the printed surface becomes scratched. 616

Printing Does Not Start. 617

The Data lamp on the Control Panel does not light up. 618
The printer does not respond even if print jobs are sent. 619
"Filling the ink" is displayed. 620
"Agitating the ink" is displayed. 621

The Printer Stops During a Print Job. 622

Printing stops and an error message is displayed. 623
The printer ejects blank, unprinted paper. 624

Problems with the Printing Quality. 625

Printing is faint. 626
Paper rubs against the printhead. 628
The edges of the paper are dirty. 630
The surface of the paper is dirty. 632
The back side of the paper is dirty. 633
Immediately after borderless printing, the trailing edge margin is soiled during regular printing. 634
Printed colors are inaccurate. 635
Banding in different colors occurs. 637
Colors in printed images are uneven. 639
Image edges are blurred or white banding occurs. 641
The contrast becomes uneven during printing. 642
The length of printed images is inaccurate in the feeding direction. 643
Images are printed crooked. 644
Documents are printed in monochrome. 645
Line thickness is not uniform. 646
Lines or colors are misaligned. 647
Borders appear in borderless printing. 648

Cannot Print over Network. 649

Cannot Connect Printer to Network. 650
Cannot Print over TCP/IP Network. 651
Cannot Print over Bonjour networks (Mac OS). 652

Cannot Find Printer on Network. 653

Cannot Find Printer on Check Printer Settings Screen (Windows). 654

Cannot Proceed beyond Printer Connection Screen/Connect Cable Screen. 655
Searching Printer by IP Address or Host Name During Setup. 657
Installation Problems. 660
Removing Printer Software. 661
Other Problems. 662
The printer does not turn on. 663
The printer takes time to start up. 664
If the Printer Makes a Strange Sound. 665
Messages advising to check the maintenance cartridge are not cleared. 667
The printer consumes a lot of ink. 668
Printed pages are not collected cleanly in the basket. 669
When Trim edge first is set, the trimmed paper is drawn into the roll unit. 670
Ink Level Detection. 671
List of Support Code for Error. 672
1005. 674
100A. 675
100B. 676
100E. 677
100F. 678
1012. 679
1018. 680
1019. 681
1021. 682
1022. 683
1023. 684
1024. 685
1025. 687
1051. 688
1052. 689
1054. 690
1055. 691
1056. 692
1057. 693

1061. 694
1200. 695
1201. 696
1210. 697
1213. 698
1214. 699
1300. 700
1306. 701
1317. 702
1318. 703
1322. 704
1323. 705
1324. 706
1325. 707
1401. 708
1403. 709
1408. 710
1409. 711
140A. 712
140B. 713
140C. 714
140F. 715
1477. 716
1478. 717
1480. 718
1481. 719
1485. 720
1492. 721
1494. 722
1495. 723
1500. 724
1551. 725
1552. 726

1570. 727
1571. 728
1660. 729
168B. 730
1720. 731
1721. 732
1722. 733
1730. 734
1731. 735
1752. 736
1753. 737
1756. 738
1757. 739
1875. 740
2001. 741
2002. 742
2130. 743
2131. 744
2132. 745
3000. 746
3001. 747
3101. 748
3200. 749
3201. 750
3250. 751
3306. 752
3311. 753
3312. 754
3313. 755
3314. 756
3315. 757
3316. 758
3317. 759

3330. 760
3331. 761
3332. 762
3333. 763
3334. 764
3335. 765
3336. 766
3340. 767
3341. 768
3350. 769
3351. 770
3352. 771
3414. 772
3415. 773
3416. 774
3417. 775
3418. 776
3419. 777
3420. 778
3421. 779
3422. 780
3423. 781
3424. 782
4107. 783
4111. 784
4112. 785
4113. 786
4114. 787
4115. 788
4116. 789
4117. 790
4118. 791
4119. 792

4120. 793
4121. 794
4801. 795
4900. 796
4901. 797
4903. 798
4905. 799
4910. 800
4911. 801
4913. 802
4920. 803
4922. 805
4924. 806
4925. 807
4926. 808
4927. 809
4931. 810
4932. 811
4933. 812
4934. 813
4935. 814
4950. 815
4951. 816
4952. 817
4953. 818
4954. 819
4955. 820
4956. 821
4957. 822
4959. 823
5106. 824
5200. 825
5A60. 826

5A61. 827
5B16. 828
5B20. 829
5B21. 830
5C00. 831
6502. 832
6700. 833
6702. 834
6820. 835
6900. 836
6901. 837
6902. 838
6910. 839
6911. 840
6920. 841
6921. 842
6930. 843
6931. 844
6932. 845
6933. 846
6940. 847
6941. 848
6942. 849
6943. 850
6944. 851
6945. 852
6946. 853
7001. 854
7003. 855
7004. 856
7050. 857
7051. 858
7052. 859

8200. 860
9000. 861
9110. 862
B20A. 863
B510. 864

Using This Online Manual

- Symbols Used in This Document
- Touch-enabled Device Users (Windows)

Symbols Used in This Document

Warning

Instructions that, if ignored, could result in death or serious personal injury caused by incorrect operation of the equipment. These must be observed for safe operation.

Caution

Instructions that, if ignored, could result in personal injury or material damage caused by incorrect operation of the equipment. These must be observed for safe operation.

Important

Instructions including important information. To avoid damage and injury or improper use of the product, be sure to read these indications.

Note

Instructions including notes for operation and additional explanations.

Basics

Instructions explaining basic operations of your product.

Note

- Icons may vary depending on your product.

Touch-enabled Device Users (Windows)

For touch actions, you need to replace "right-click" in this document with the action set on the operating system. For example, if the action is set to "press and hold" on your operating system, replace "right-click" with "press and hold."

Trademarks and Licenses

- Microsoft is a registered trademark of Microsoft Corporation.
- Windows is a trademark or registered trademark of Microsoft Corporation in the U.S. and/or other countries.
- Windows Vista is a trademark or registered trademark of Microsoft Corporation in the U.S. and/or other countries.
- Internet Explorer is a trademark or registered trademark of Microsoft Corporation in the U.S. and/or other countries.
- Mac, Mac OS, AirPort, Safari, Bonjour, iPad, iPhone and iPod touch are trademarks of Apple Inc., registered in the U.S. and other countries. App Store, AirPrint and the AirPrint logo are trademarks of Apple Inc.
- IOS is a trademark or registered trademark of Cisco in the U.S. and other countries and is used under license.
- Google Cloud Print, Google Chrome, Chrome OS, Chromebook, Android, Google Play, Google Drive, Google Apps and Picasa are either registered trademarks or trademarks of Google Inc.
- Adobe, Flash, Photoshop, Photoshop Elements, Lightroom, Adobe RGB and Adobe RGB (1998) are either registered trademarks or trademarks of Adobe Systems Incorporated in the United States and/or other countries.
- Bluetooth is a trademark of Bluetooth SIG, Inc., U.S.A. and licensed to Canon Inc.
- Autodesk and AutoCAD are registered trademarks or trademarks of Autodesk, Inc., and/or its subsidiaries and/or affiliates in the USA and/or other countries.

Note

- The formal name of Windows Vista is Microsoft Windows Vista operating system.

Copyright (c) 2003-2004, Apple Computer, Inc. All rights reserved.

Redistribution and use in source and binary forms, with or without modification, are permitted provided that the following conditions are met:

1. Redistributions of source code must retain the above copyright notice, this list of conditions and the following disclaimer.
2. Redistributions in binary form must reproduce the above copyright notice, this list of conditions and the following disclaimer in the documentation and/or other materials provided with the distribution.
3. Neither the name of Apple Computer, Inc. ("Apple") nor the names of its contributors may be used to endorse or promote products derived from this software without specific prior written permission.

THIS SOFTWARE IS PROVIDED BY APPLE AND ITS CONTRIBUTORS "AS IS" AND ANY EXPRESS OR IMPLIED WARRANTIES, INCLUDING, BUT NOT LIMITED TO, THE IMPLIED WARRANTIES OF MERCHANTABILITY AND FITNESS FOR A PARTICULAR PURPOSE ARE DISCLAIMED. IN NO EVENT SHALL APPLE OR ITS CONTRIBUTORS BE LIABLE FOR ANY DIRECT, INDIRECT, INCIDENTAL, SPECIAL, EXEMPLARY, OR CONSEQUENTIAL DAMAGES (INCLUDING, BUT NOT LIMITED TO, PROCUREMENT OF SUBSTITUTE GOODS OR SERVICES; LOSS OF USE, DATA, OR PROFITS; OR BUSINESS INTERRUPTION) HOWEVER CAUSED AND ON ANY THEORY OF LIABILITY, WHETHER IN CONTRACT, STRICT LIABILITY, OR TORT INCLUDING NEGLIGENCE OR OTHERWISE) ARISING IN ANY WAY OUT OF THE USE OF THIS SOFTWARE, EVEN IF ADVISED OF THE POSSIBILITY OF SUCH DAMAGE.

Apache License

Version 2.0, January 2004

http://www.apache.org/licenses/

TERMS AND CONDITIONS FOR USE, REPRODUCTION, AND DISTRIBUTION

1. Definitions.

   "License" shall mean the terms and conditions for use, reproduction, and distribution as defined by Sections 1 through 9 of this document.

   "Licensor" shall mean the copyright owner or entity authorized by the copyright owner that is granting the License.

   "Legal Entity" shall mean the union of the acting entity and all other entities that control, are controlled by, or are under common control with that entity. For the purposes of this definition, "control" means (i) the power, direct or indirect, to cause the direction or management of such entity, whether by contract or otherwise, or (ii) ownership of fifty percent (50%) or more of the outstanding shares, or (iii) beneficial ownership of such entity.

   "You" (or "Your") shall mean an individual or Legal Entity exercising permissions granted by this License.

   "Source" form shall mean the preferred form for making modifications, including but not limited to software source code, documentation source, and configuration files.

   "Object" form shall mean any form resulting from mechanical transformation or translation of a Source form, including but not limited to compiled object code, generated documentation, and conversions to other media types.

   "Work" shall mean the work of authorship, whether in Source or Object form, made available under the License, as indicated by a copyright notice that is included in or attached to the work (an example is provided in the Appendix below).

   "Derivative Works" shall mean any work, whether in Source or Object form, that is based on (or derived from) the Work and for which the editorial revisions, annotations, elaborations, or other modifications represent, as a whole, an original work of authorship. For the purposes of this License, Derivative Works shall not include works that remain separable from, or merely link (or bind by name) to the interfaces of, the Work and Derivative Works thereof.

   "Contribution" shall mean any work of authorship, including the original version of the Work and any modifications or additions to that Work or Derivative Works thereof, that is intentionally submitted to Licensor for inclusion in the Work by the copyright owner or by an individual or Legal Entity authorized to submit on behalf of the copyright owner. For the purposes of this definition, "submitted" means any form of electronic, verbal, or written communication sent to the Licensor or its representatives, including but not limited to communication on electronic mailing lists, source code control systems, and issue tracking systems that are managed by, or on behalf of, the Licensor for the purpose of discussing and improving the Work, but excluding communication that is conspicuously marked or otherwise designated in writing by the copyright owner as "Not a Contribution."

   "Contributor" shall mean Licensor and any individual or Legal Entity on behalf of whom a Contribution has been received by Licensor and subsequently incorporated within the Work.

2. Grant of Copyright License. Subject to the terms and conditions of this License, each Contributor hereby grants to You a perpetual, worldwide, non-exclusive, no-charge, royalty-free, irrevocable

copyright license to reproduce, prepare Derivative Works of, publicly display, publicly perform, sublicense, and distribute the Work and such Derivative Works in Source or Object form.

3. Grant of Patent License. Subject to the terms and conditions of this License, each Contributor hereby grants to You a perpetual, worldwide, non-exclusive, no-charge, royalty-free, irrevocable (except as stated in this section) patent license to make, have made, use, offer to sell, sell, import, and otherwise transfer the Work, where such license applies only to those patent claims licensable by such Contributor that are necessarily infringed by their Contribution(s) alone or by combination of their Contribution(s) with the Work to which such Contribution(s) was submitted. If You institute patent litigation against any entity (including a cross-claim or counterclaim in a lawsuit) alleging that the Work or a Contribution incorporated within the Work constitutes direct or contributory patent infringement, then any patent licenses granted to You under this License for that Work shall terminate as of the date such litigation is filed.
4. Redistribution. You may reproduce and distribute copies of the Work or Derivative Works thereof in any medium, with or without modifications, and in Source or Object form, provided that You meet the following conditions:

    1. You must give any other recipients of the Work or Derivative Works a copy of this License; and
    2. You must cause any modified files to carry prominent notices stating that You changed the files; and
    3. You must retain, in the Source form of any Derivative Works that You distribute, all copyright, patent, trademark, and attribution notices from the Source form of the Work, excluding those notices that do not pertain to any part of the Derivative Works; and
    4. If the Work includes a "NOTICE" text file as part of its distribution, then any Derivative Works that You distribute must include a readable copy of the attribution notices contained within such NOTICE file, excluding those notices that do not pertain to any part of the Derivative Works, in at least one of the following places: within a NOTICE text file distributed as part of the Derivative Works; within the Source form or documentation, if provided along with the Derivative Works; or, within a display generated by the Derivative Works, if and wherever such third-party notices normally appear. The contents of the NOTICE file are for informational purposes only and do not modify the License. You may add Your own attribution notices within Derivative Works that You distribute, alongside or as an addendum to the NOTICE text from the Work, provided that such additional attribution notices cannot be construed as modifying the License.

    You may add Your own copyright statement to Your modifications and may provide additional or different license terms and conditions for use, reproduction, or distribution of Your modifications, or for any such Derivative Works as a whole, provided Your use, reproduction, and distribution of the Work otherwise complies with the conditions stated in this License.

5. Submission of Contributions. Unless You explicitly state otherwise, any Contribution intentionally submitted for inclusion in the Work by You to the Licensor shall be under the terms and conditions of this License, without any additional terms or conditions. Notwithstanding the above, nothing herein shall supersede or modify the terms of any separate license agreement you may have executed with Licensor regarding such Contributions.
6. Trademarks. This License does not grant permission to use the trade names, trademarks, service marks, or product names of the Licensor, except as required for reasonable and customary use in describing the origin of the Work and reproducing the content of the NOTICE file.
7. Disclaimer of Warranty. Unless required by applicable law or agreed to in writing, Licensor provides the Work (and each Contributor provides its Contributions) on an "AS IS" BASIS, WITHOUT WARRANTIES OR CONDITIONS OF ANY KIND, either express or implied, including, without

limitation, any warranties or conditions of TITLE, NON-INFRINGEMENT, MERCHANTABILITY, or FITNESS FOR A PARTICULAR PURPOSE. You are solely responsible for determining the appropriateness of using or redistributing the Work and assume any risks associated with Your exercise of permissions under this License.

8. Limitation of Liability. In no event and under no legal theory, whether in tort (including negligence), contract, or otherwise, unless required by applicable law (such as deliberate and grossly negligent acts) or agreed to in writing, shall any Contributor be liable to You for damages, including any direct, indirect, special, incidental, or consequential damages of any character arising as a result of this License or out of the use or inability to use the Work (including but not limited to damages for loss of goodwill, work stoppage, computer failure or malfunction, or any and all other commercial damages or losses), even if such Contributor has been advised of the possibility of such damages.
9. Accepting Warranty or Additional Liability. While redistributing the Work or Derivative Works thereof, You may choose to offer, and charge a fee for, acceptance of support, warranty, indemnity, or other liability obligations and/or rights consistent with this License. However, in accepting such obligations, You may act only on Your own behalf and on Your sole responsibility, not on behalf of any other Contributor, and only if You agree to indemnify, defend, and hold each Contributor harmless for any liability incurred by, or claims asserted against, such Contributor by reason of your accepting any such warranty or additional liability.
END OF TERMS AND CONDITIONS

---- Part 1: CMU/UCD copyright notice: (BSD like) -----

Copyright 1989, 1991, 1992 by Carnegie Mellon University

Derivative Work - 1996, 1998-2000

Copyright 1996, 1998-2000 The Regents of the University of California

All Rights Reserved

Permission to use, copy, modify and distribute this software and its documentation for any purpose and without fee is hereby granted, provided that the above copyright notice appears in all copies and that both that copyright notice and this permission notice appear in supporting documentation, and that the name of CMU and The Regents of the University of California not be used in advertising or publicity pertaining to distribution of the software without specific written permission.

CMU AND THE REGENTS OF THE UNIVERSITY OF CALIFORNIA DISCLAIM ALL WARRANTIES WITH REGARD TO THIS SOFTWARE, INCLUDING ALL IMPLIED WARRANTIES OF MERCHANTABILITY AND FITNESS. IN NO EVENT SHALL CMU OR THE REGENTS OF THE UNIVERSITY OF CALIFORNIA BE LIABLE FOR ANY SPECIAL, INDIRECT OR CONSEQUENTIAL DAMAGES OR ANY DAMAGES WHATSOEVER RESULTING FROM THE LOSS OF USE, DATA OR PROFITS, WHETHER IN AN ACTION OF CONTRACT, NEGLIGENCE OR OTHER TORTIOUS ACTION, ARISING OUT OF OR IN CONNECTION WITH THE USE OR PERFORMANCE OF THIS SOFTWARE.

---- Part 2: Networks Associates Technology, Inc copyright notice (BSD) -----

Copyright (c) 2001-2003, Networks Associates Technology, Inc

All rights reserved.

Redistribution and use in source and binary forms, with or without modification, are permitted provided that the following conditions are met:

* Redistributions of source code must retain the above copyright notice, this list of conditions and the following disclaimer.
* Redistributions in binary form must reproduce the above copyright notice, this list of conditions and the following disclaimer in the documentation and/or other materials provided with the distribution.
* Neither the name of the Networks Associates Technology, Inc nor the names of its contributors may be used to endorse or promote products derived from this software without specific prior written permission.

THIS SOFTWARE IS PROVIDED BY THE COPYRIGHT HOLDERS AND CONTRIBUTORS ``AS IS'' AND ANY EXPRESS OR IMPLIED WARRANTIES, INCLUDING, BUT NOT LIMITED TO, THE IMPLIED WARRANTIES OF MERCHANTABILITY AND FITNESS FOR A PARTICULAR PURPOSE ARE DISCLAIMED. IN NO EVENT SHALL THE COPYRIGHT HOLDERS OR CONTRIBUTORS BE LIABLE FOR ANY DIRECT, INDIRECT, INCIDENTAL, SPECIAL, EXEMPLARY, OR CONSEQUENTIAL DAMAGES (INCLUDING, BUT NOT LIMITED TO, PROCUREMENT OF SUBSTITUTE GOODS OR SERVICES; LOSS OF USE, DATA, OR PROFITS; OR BUSINESS INTERRUPTION) HOWEVER CAUSED AND ON ANY THEORY OF LIABILITY, WHETHER IN CONTRACT, STRICT LIABILITY, OR TORT (INCLUDING NEGLIGENCE OR OTHERWISE) ARISING IN ANY WAY OUT OF THE USE OF THIS SOFTWARE, EVEN IF ADVISED OF THE POSSIBILITY OF SUCH DAMAGE.

---- Part 3: Cambridge Broadband Ltd. copyright notice (BSD) -----

Portions of this code are copyright (c) 2001-2003, Cambridge Broadband Ltd.

All rights reserved.

Redistribution and use in source and binary forms, with or without modification, are permitted provided that the following conditions are met:

* Redistributions of source code must retain the above copyright notice, this list of conditions and the following disclaimer.
* Redistributions in binary form must reproduce the above copyright notice, this list of conditions and the following disclaimer in the documentation and/or other materials provided with the distribution.
* The name of Cambridge Broadband Ltd. may not be used to endorse or promote products derived from this software without specific prior written permission.

THIS SOFTWARE IS PROVIDED BY THE COPYRIGHT HOLDER ``AS IS'' AND ANY EXPRESS OR IMPLIED WARRANTIES, INCLUDING, BUT NOT LIMITED TO, THE IMPLIED WARRANTIES OF MERCHANTABILITY AND FITNESS FOR A PARTICULAR PURPOSE ARE DISCLAIMED. IN NO EVENT SHALL THE COPYRIGHT HOLDER BE LIABLE FOR ANY DIRECT, INDIRECT, INCIDENTAL, SPECIAL, EXEMPLARY, OR CONSEQUENTIAL DAMAGES (INCLUDING, BUT NOT LIMITED TO, PROCUREMENT OF SUBSTITUTE GOODS OR SERVICES; LOSS OF USE, DATA, OR PROFITS; OR BUSINESS INTERRUPTION) HOWEVER CAUSED AND ON ANY THEORY OF LIABILITY, WHETHER IN CONTRACT, STRICT LIABILITY, OR TORT (INCLUDING NEGLIGENCE OR OTHERWISE) ARISING IN ANY WAY OUT OF THE USE OF THIS SOFTWARE, EVEN IF ADVISED OF THE POSSIBILITY OF SUCH DAMAGE.

---- Part 4: Sun Microsystems, Inc. copyright notice (BSD) -----

Copyright c 2003 Sun Microsystems, Inc., 4150 Network Circle, Santa Clara, California 95054, U.S.A. All rights reserved.

Use is subject to license terms below.

This distribution may include materials developed by third parties.

Sun, Sun Microsystems, the Sun logo and Solaris are trademarks or registered trademarks of Sun Microsystems, Inc. in the U.S. and other countries.

Redistribution and use in source and binary forms, with or without modification, are permitted provided that the following conditions are met:

* Redistributions of source code must retain the above copyright notice, this list of conditions and the following disclaimer.
* Redistributions in binary form must reproduce the above copyright notice, this list of conditions and the following disclaimer in the documentation and/or other materials provided with the distribution.
* Neither the name of the Sun Microsystems, Inc. nor the names of its contributors may be used to endorse or promote products derived from this software without specific prior written permission.

THIS SOFTWARE IS PROVIDED BY THE COPYRIGHT HOLDERS AND CONTRIBUTORS ``AS IS'' AND ANY EXPRESS OR IMPLIED WARRANTIES, INCLUDING, BUT NOT LIMITED TO, THE IMPLIED WARRANTIES OF MERCHANTABILITY AND FITNESS FOR A PARTICULAR PURPOSE ARE DISCLAIMED. IN NO EVENT SHALL THE COPYRIGHT HOLDERS OR CONTRIBUTORS BE LIABLE FOR ANY DIRECT, INDIRECT, INCIDENTAL, SPECIAL, EXEMPLARY, OR CONSEQUENTIAL DAMAGES (INCLUDING, BUT NOT LIMITED TO, PROCUREMENT OF SUBSTITUTE GOODS OR SERVICES; LOSS OF USE, DATA, OR PROFITS; OR BUSINESS INTERRUPTION) HOWEVER CAUSED AND ON ANY THEORY OF LIABILITY, WHETHER IN CONTRACT, STRICT LIABILITY, OR TORT (INCLUDING NEGLIGENCE OR OTHERWISE) ARISING IN ANY WAY OUT OF THE USE OF THIS SOFTWARE, EVEN IF ADVISED OF THE POSSIBILITY OF SUCH DAMAGE.

---- Part 5: Sparta, Inc copyright notice (BSD) -----

Copyright (c) 2003-2009, Sparta, Inc

All rights reserved.

Redistribution and use in source and binary forms, with or without modification, are permitted provided that the following conditions are met:

* Redistributions of source code must retain the above copyright notice, this list of conditions and the following disclaimer.
* Redistributions in binary form must reproduce the above copyright notice, this list of conditions and the following disclaimer in the documentation and/or other materials provided with the distribution.
* Neither the name of Sparta, Inc nor the names of its contributors may be used to endorse or promote products derived from this software without specific prior written permission.

THIS SOFTWARE IS PROVIDED BY THE COPYRIGHT HOLDERS AND CONTRIBUTORS ``AS IS'' AND ANY EXPRESS OR IMPLIED WARRANTIES, INCLUDING, BUT NOT LIMITED TO, THE IMPLIED WARRANTIES OF MERCHANTABILITY AND FITNESS FOR A PARTICULAR PURPOSE ARE DISCLAIMED. IN NO EVENT SHALL THE COPYRIGHT HOLDERS OR CONTRIBUTORS BE LIABLE FOR ANY DIRECT, INDIRECT, INCIDENTAL, SPECIAL, EXEMPLARY, OR CONSEQUENTIAL DAMAGES (INCLUDING, BUT NOT LIMITED TO, PROCUREMENT OF SUBSTITUTE GOODS OR SERVICES; LOSS OF USE, DATA, OR PROFITS; OR BUSINESS INTERRUPTION) HOWEVER CAUSED AND ON ANY THEORY OF LIABILITY, WHETHER IN CONTRACT, STRICT LIABILITY, OR TORT (INCLUDING NEGLIGENCE OR OTHERWISE) ARISING IN ANY WAY OUT OF THE USE OF THIS SOFTWARE, EVEN IF ADVISED OF THE POSSIBILITY OF SUCH DAMAGE.

---- Part 6: Cisco/BUPTNIC copyright notice (BSD) -----

Copyright (c) 2004, Cisco, Inc and Information Network Center of Beijing University of Posts and Telecommunications.

All rights reserved.

Redistribution and use in source and binary forms, with or without modification, are permitted provided that the following conditions are met:

* Redistributions of source code must retain the above copyright notice, this list of conditions and the following disclaimer.
* Redistributions in binary form must reproduce the above copyright notice, this list of conditions and the following disclaimer in the documentation and/or other materials provided with the distribution.
* Neither the name of Cisco, Inc, Beijing University of Posts and Telecommunications, nor the names of their contributors may be used to endorse or promote products derived from this software without specific prior written permission.

THIS SOFTWARE IS PROVIDED BY THE COPYRIGHT HOLDERS AND CONTRIBUTORS ``AS IS'' AND ANY EXPRESS OR IMPLIED WARRANTIES, INCLUDING, BUT NOT LIMITED TO, THE IMPLIED WARRANTIES OF MERCHANTABILITY AND FITNESS FOR A PARTICULAR PURPOSE ARE DISCLAIMED. IN NO EVENT SHALL THE COPYRIGHT HOLDERS OR CONTRIBUTORS BE LIABLE FOR ANY DIRECT, INDIRECT, INCIDENTAL, SPECIAL, EXEMPLARY, OR CONSEQUENTIAL DAMAGES (INCLUDING, BUT NOT LIMITED TO, PROCUREMENT OF SUBSTITUTE GOODS OR SERVICES; LOSS OF USE, DATA, OR PROFITS; OR BUSINESS INTERRUPTION) HOWEVER CAUSED AND ON ANY THEORY OF LIABILITY, WHETHER IN CONTRACT, STRICT LIABILITY, OR TORT (INCLUDING NEGLIGENCE OR OTHERWISE) ARISING IN ANY WAY OUT OF THE USE OF THIS SOFTWARE, EVEN IF ADVISED OF THE POSSIBILITY OF SUCH DAMAGE.

---- Part 7: Fabasoft R&D Software GmbH & Co KG copyright notice (BSD) -----

Copyright (c) Fabasoft R&D Software GmbH & Co KG, 2003 oss@fabasoft.com

Author: Bernhard Penz

Redistribution and use in source and binary forms, with or without modification, are permitted provided that the following conditions are met:

* Redistributions of source code must retain the above copyright notice, this list of conditions and the following disclaimer.
* Redistributions in binary form must reproduce the above copyright notice, this list of conditions and the following disclaimer in the documentation and/or other materials provided with the distribution.
* The name of Fabasoft R&D Software GmbH & Co KG or any of its subsidiaries, brand or product names may not be used to endorse or promote products derived from this software without specific prior written permission.

THIS SOFTWARE IS PROVIDED BY THE COPYRIGHT HOLDER ``AS IS'' AND ANY EXPRESS OR IMPLIED WARRANTIES, INCLUDING, BUT NOT LIMITED TO, THE IMPLIED WARRANTIES OF MERCHANTABILITY AND FITNESS FOR A PARTICULAR PURPOSE ARE DISCLAIMED. IN NO EVENT SHALL THE COPYRIGHT HOLDER BE LIABLE FOR ANY DIRECT, INDIRECT, INCIDENTAL, SPECIAL, EXEMPLARY, OR CONSEQUENTIAL DAMAGES (INCLUDING, BUT NOT LIMITED TO, PROCUREMENT OF SUBSTITUTE GOODS OR SERVICES; LOSS OF USE, DATA, OR PROFITS; OR BUSINESS INTERRUPTION) HOWEVER CAUSED AND ON ANY THEORY OF LIABILITY, WHETHER

IN CONTRACT, STRICT LIABILITY, OR TORT (INCLUDING NEGLIGENCE OR OTHERWISE) ARISING IN ANY WAY OUT OF THE USE OF THIS SOFTWARE, EVEN IF ADVISED OF THE POSSIBILITY OF SUCH DAMAGE.

LEADTOOLS

Copyright (C) 1991-2009 LEAD Technologies, Inc.

CMap Resources

Copyright 1990-2009 Adobe Systems Incorporated.
All rights reserved.

Copyright 1990-2010 Adobe Systems Incorporated.
All rights reserved.

Redistribution and use in source and binary forms, with or without modification, are permitted provided that the following conditions are met:

Redistributions of source code must retain the above copyright notice, this list of conditions and the following disclaimer.

Redistributions in binary form must reproduce the above copyright notice, this list of conditions and the following disclaimer in the documentation and/or other materials provided with the distribution.

Neither the name of Adobe Systems Incorporated nor the names of its contributors may be used to endorse or promote products derived from this software without specific prior written permission.

THIS SOFTWARE IS PROVIDED BY THE COPYRIGHT HOLDERS AND CONTRIBUTORS "AS IS" AND ANY EXPRESS OR IMPLIED WARRANTIES, INCLUDING, BUT NOT LIMITED TO, THE IMPLIED WARRANTIES OF MERCHANTABILITY AND FITNESS FOR A PARTICULAR PURPOSE ARE DISCLAIMED. IN NO EVENT SHALL THE COPYRIGHT HOLDER OR CONTRIBUTORS BE LIABLE FOR ANY DIRECT, INDIRECT, INCIDENTAL, SPECIAL, EXEMPLARY, OR CONSEQUENTIAL DAMAGES (INCLUDING, BUT NOT LIMITED TO, PROCUREMENT OF SUBSTITUTE GOODS OR SERVICES; LOSS OF USE, DATA, OR PROFITS; OR BUSINESS INTERRUPTION) HOWEVER CAUSED AND ON ANY THEORY OF LIABILITY, WHETHER IN CONTRACT, STRICT LIABILITY, OR TORT (INCLUDING NEGLIGENCE OR OTHERWISE) ARISING IN ANY WAY OUT OF THE USE OF THIS SOFTWARE, EVEN IF ADVISED OF THE POSSIBILITY OF SUCH DAMAGE.

MIT License

Copyright (c) 1998, 1999, 2000 Thai Open Source Software Center Ltd

Permission is hereby granted, free of charge, to any person obtaining a copy of this software and associated documentation files (the "Software"), to deal in the Software without restriction, including without limitation the rights to use, copy, modify, merge, publish, distribute, sublicense, and/or sell copies of the Software, and to permit persons to whom the Software is furnished to do so, subject to the following conditions:

The above copyright notice and this permission notice shall be included in all copies or substantial portions of the Software.

THE SOFTWARE IS PROVIDED "AS IS", WITHOUT WARRANTY OF ANY KIND, EXPRESS OR IMPLIED, INCLUDING BUT NOT LIMITED TO THE WARRANTIES OF MERCHANTABILITY, FITNESS FOR A PARTICULAR PURPOSE AND NONINFRINGEMENT. IN NO EVENT SHALL THE AUTHORS OR COPYRIGHT HOLDERS BE LIABLE FOR ANY CLAIM, DAMAGES OR OTHER LIABILITY, WHETHER IN AN ACTION OF CONTRACT, TORT OR OTHERWISE, ARISING FROM, OUT OF OR IN CONNECTION WITH THE SOFTWARE OR THE USE OR OTHER DEALINGS IN THE SOFTWARE.

The following applies only to products supporting Wi-Fi.

(c) 2009-2013 by Jeff Mott. All rights reserved.

Redistribution and use in source and binary forms, with or without modification, are permitted provided that the following conditions are met:

* Redistributions of source code must retain the above copyright notice, this list of conditions, and the following disclaimer.
* Redistributions in binary form must reproduce the above copyright notice, this list of conditions, and the following disclaimer in the documentation or other materials provided with the distribution.
* Neither the name CryptoJS nor the names of its contributors may be used to endorse or promote products derived from this software without specific prior written permission.

THIS SOFTWARE IS PROVIDED BY THE COPYRIGHT HOLDERS AND CONTRIBUTORS "AS IS," AND ANY EXPRESS OR IMPLIED WARRANTIES, INCLUDING, BUT NOT LIMITED TO, THE IMPLIED WARRANTIES OF MERCHANTABILITY AND FITNESS FOR A PARTICULAR PURPOSE, ARE DISCLAIMED. IN NO EVENT SHALL THE COPYRIGHT HOLDER OR CONTRIBUTORS BE LIABLE FOR ANY DIRECT, INDIRECT, INCIDENTAL, SPECIAL, EXEMPLARY, OR CONSEQUENTIAL DAMAGES (INCLUDING, BUT NOT LIMITED TO, PROCUREMENT OF SUBSTITUTE GOODS OR SERVICES; LOSS OF USE, DATA, OR PROFITS; OR BUSINESS INTERRUPTION) HOWEVER CAUSED AND ON ANY THEORY OF LIABILITY, WHETHER IN CONTRACT, STRICT LIABILITY, OR TORT (INCLUDING NEGLIGENCE OR OTHERWISE) ARISING IN ANY WAY OUT OF THE USE OF THIS SOFTWARE, EVEN IF ADVISED OF THE POSSIBILITY OF SUCH DAMAGE.

Enter keywords in the search window and click (Search).

You can search for target pages in this guide.

Entry example: "(your product's model name) load paper"

Search Tips

You can search for target pages by entering keywords in the search window.

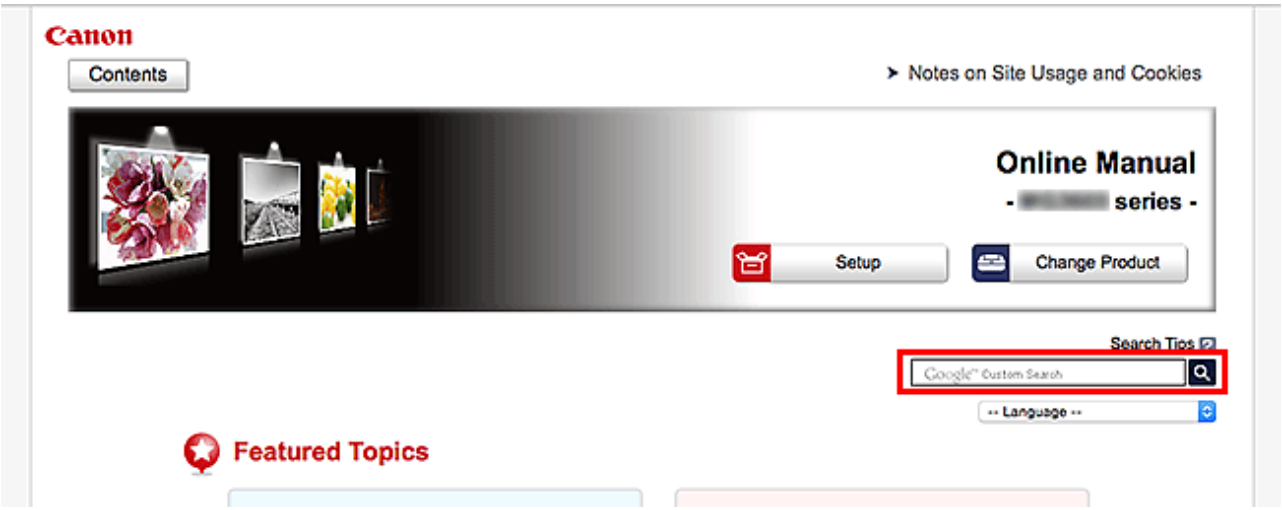

Important

- This function may not be available in some countries/regions.

Note

- The displayed screen may vary.
- When searching from this page without entering your product's model name or your application's name, all products supported by this guide will be considered for the search.
  If you want to narrow down the search results, add your product's model name or your application's name to the keywords.

- **Searching for Functions**

  Enter your product's model name and a keyword for the function you want to learn about

  Example: When you want to learn how to load paper
  Enter "(your product's model name) load paper" in the search window and perform a search

- **Troubleshooting Errors**

  Enter your product's model name and a support code

  Example: When the following error screen appears
  Enter "(your product's model name) 1003" in the search window and perform a search

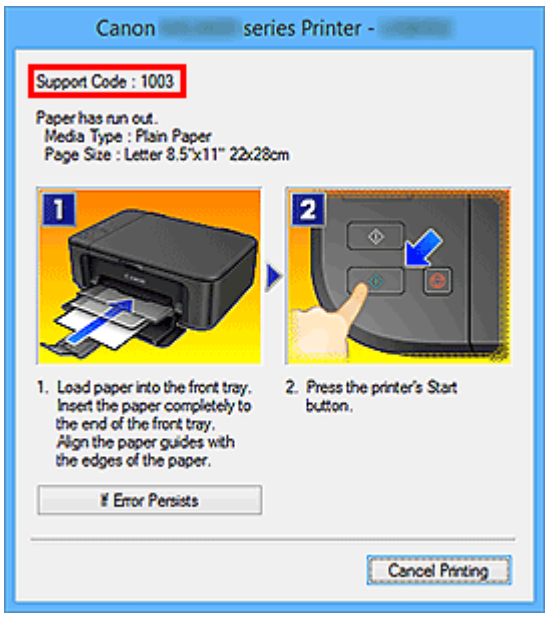

Note

- The displayed screen varies depending on your product.

- **Searching for Application Functions**

  Enter your application's name and a keyword for the function you want to learn about

  Example: When you want to learn how to print collages with My Image Garden
  Enter "My Image Garden collage" in the search window and perform a search

- **Searching for Reference Pages**

  Enter your model name and a reference page title*
  * You can find reference pages more easily by entering the function name as well.

  Example: When you want to browse the page referred to by the following sentence on a scanning procedure page
  Refer to "Color Settings Tab" for your model from Home of the Online Manual for details.
  Enter "(your product's model name) scan Color Settings Tab" in the search window and perform a search

Printer Functions

- Connecting Device to Printer Directly via Wireless LAN (Direct Connection)
- Managing Printer Conveniently Using Quick Utility Toolbox
- Available Connection Methods
- Managing Printer Status Using Device Management Console

Connecting Device to Printer Directly via Wireless LAN (Direct Connection)

The printer supports "direct connection" in which you can connect to the printer wirelessly from devices (e.g. smartphone, or tablet) without a wireless router.

Switch to "direct connection" to print wirelessly.

- Connecting Smartphone/Tablet to Printer Directly via Wireless LAN (Direct Connection)

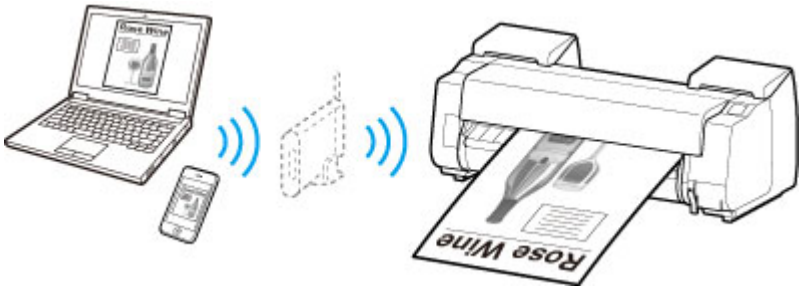

Managing Printer Conveniently Using Quick Utility Toolbox

Quick Utility Toolbox is a shortcut menu that lets you access the functions you want to use with one click. After installing utilities compatible with Quick Utility Toolbox, they will be added to this menu. The Quick Utility Toolbox provides a convenient way to quickly launch added utilities for making printer settings and doing other management tasks.

Refer to the following for details.

- Quick Utility Toolbox Guide (Windows)
- Quick Utility Toolbox Guide (Mac OS)

Available Connection Methods

The following connection methods are available on the printer.

Wireless Connection

- **With a wireless router**

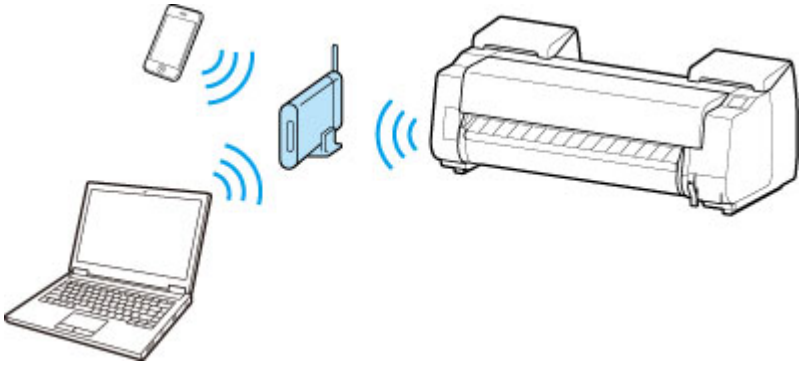

- **Without a wireless router**

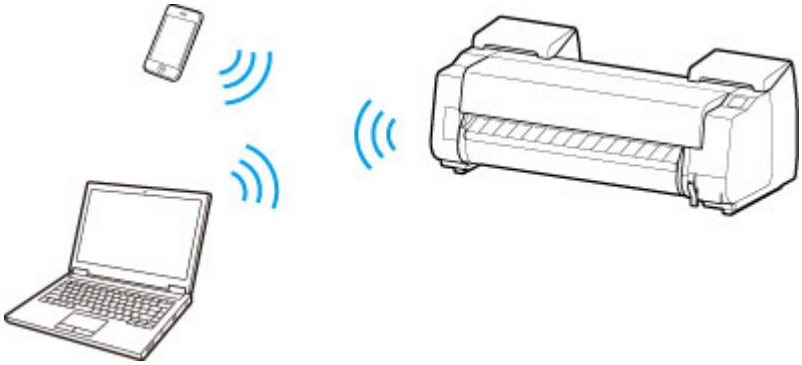

Wired Connection

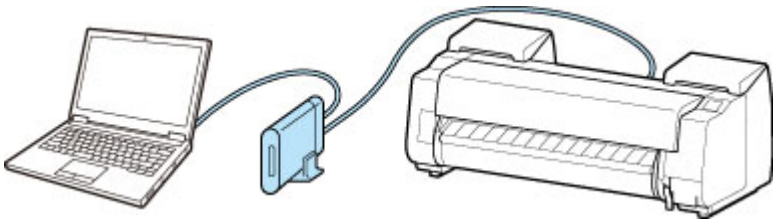

USB Connection

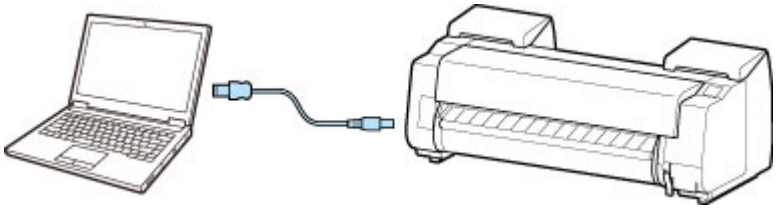

Wireless Connection

There are two methods for connecting the printer to your device (e.g. smartphone or tablet). One method is to connect using a wireless router, and the other method is to connect without using a wireless router.

The two connection methods cannot be used at the same time.

If you have a wireless router, we recommend you use the method described in Connection Using a Wireless Router.

When connecting another device while a device is already connected to the printer, connect it using the same connection method as the connected device.

If you connect using a different connection method, the connection to the device in use will be disabled.

- **Connection Using a Wireless Router**

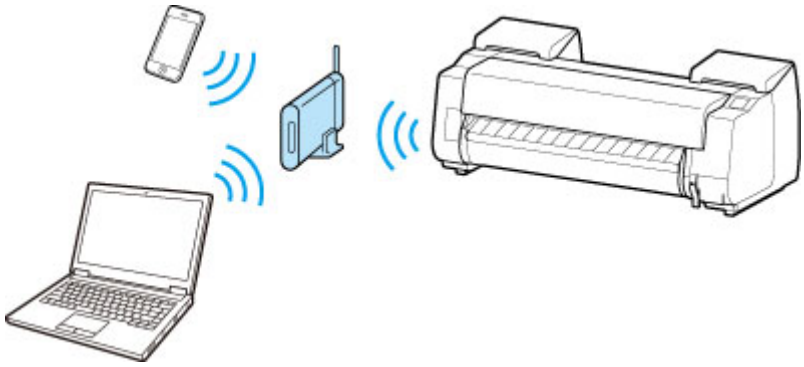

  - Connect the printer and a device using a wireless router.
  - Connection methods vary depending on the wireless router type.
  - You can change network settings such as the SSID and security protocol on the printer.
  - When the connection between a device and a wireless router is completed and (Wi-Fi icon) is displayed in the device's screen, you can connect the device to the printer using the wireless router.

- **Connection without Using a Wireless Router**

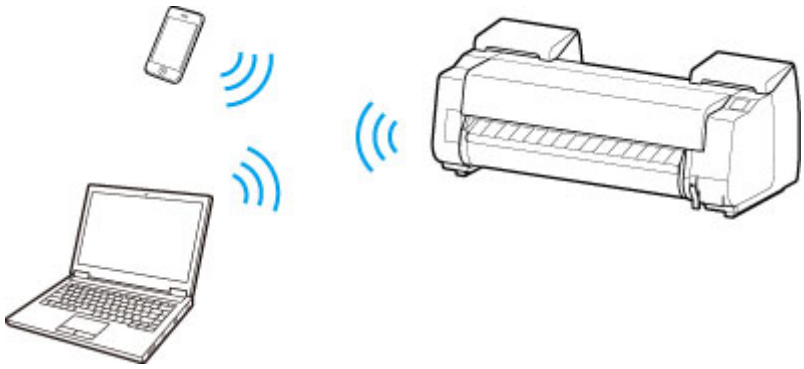

  - Connect the printer and a device without using a wireless router. Connect the device and the printer directly using the printer's direct connection.
  - If you connect a device connected to the Internet via a wireless router to the printer that is in the direct connection, the connection between the device and wireless router will be disabled. In that case, the connection of the device may switch to a mobile data connection automatically depending on your device. Transmission fees for connecting to the Internet using a mobile data connection apply.
  - In the direct connection, you can connect up to five devices at the same time. If you try to connect another device while five devices are already connected, disconnect a device you do not use and configure settings again.
  - Network settings such as the SSID and security protocol are specified automatically.

Wired Connection

Connect the printer and a hub or router with an Ethernet cable. Prepare an Ethernet cable.

USB Connection

Connect the printer and a computer with a USB cable. Prepare a USB cable.

Restrictions

(Appears in a new window)

Managing Printer Status Using Device Management Console

Device Management Console is software for checking the printer status or color calibrating the printer.

Use Device Management Console to:

- Check the status of a printer connected via a network or USB.
- E-mail the administrator in case of a printer warning or error.
- Identify the color calibration status or perform color calibration.

Refer to the following for details.

- Device Management Console Guide (Windows)
- Device Management Console Guide (Mac OS)

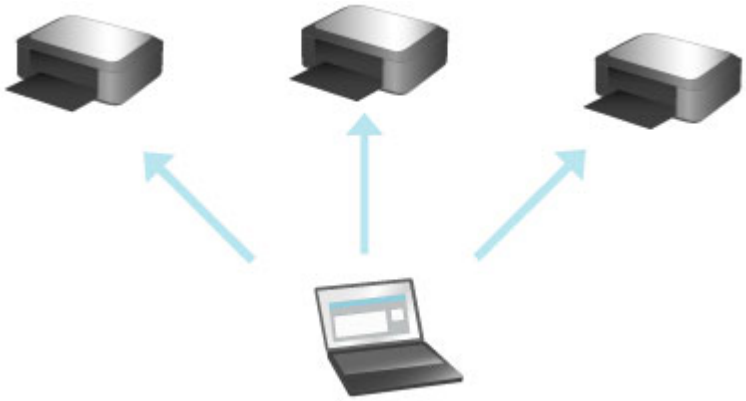

Handling and Use of Paper

- **Paper**
  - Types of Paper
  - Paper Sizes
  - Using Paper Other Than Genuine Paper and feed confirmed Paper
  - Printing on Paper Other Than Genuine Paper and feed confirmed Paper Using Existing Settings
  - Printing on Paper Other Than Genuine Paper and feed confirmed Paper by Adding a Media Type
  - Paper Information List
  - Updating paper information
- **Handling rolls**
  - Loading Rolls on the Roll Holder
  - Loading the Upper Roll on the Printer
  - Loading the Lower Roll on the Roll Unit (Option)
  - Changing the Type of Paper
  - Specifying the Paper Length
  - Removing the Upper Roll from the Printer
  - Removing the Lower Roll from the Roll Unit (Option)
  - Removing Rolls From the Roll Holder
  - Clearing Jammed Roll Paper
  - Feeding Roll Paper Manually
  - Keeping Track of the Amount of Roll Paper Left
  - Specifying the Ink Drying Time for Rolls
  - Specifying the Cutting Method for Rolls
  - Cutting the Leading Edge of Roll Paper Automatically
  - Reducing Dust from Cutting Rolls
  - Roll Holder Set

- Automatically Switch Rolls

- **Handling sheets**
  - Loading Sheets in the Printer
  - Changing the Type of Paper
  - Printing From a Desired Starting Point
  - Removing Sheets
  - Clearing a Jammed Sheet
- **Basket**
  - Parts of the Basket
  - Using the Basket
  - Example Basket Configurations
  - Storing the Basket
- **Roll Unit**
  - Parts of the Roll Unit
  - Roll Unit
  - Switching Roll Unit Modes
  - Using the Roll Unit In Take-Up Mode
  - Removing Printed Paper from the Roll Unit
- **Media Configuration Tool Guide**

Paper

- Types of Paper
- Paper Sizes
- Using Paper Other Than Genuine Paper and feed confirmed Paper
- Printing on Paper Other Than Genuine Paper and feed confirmed Paper Using Existing Settings
- Printing on Paper Other Than Genuine Paper and feed confirmed Paper by Adding a Media Type
- Paper Information List
- Updating paper information

Types of Paper

The following media types are supported by the printer. For details on the media types supported by the printer, see "Paper Information List."

- Plain Paper
- Coated Paper
- Photo Paper
- Glossy Paper
- Proofing Paper
- CAD-dedicated Paper Etc.

The Paper Information List includes the following information.

- Types of paper
- Paper handling
- Paper product specifications
- Use precautions
- Setting of printer driver, control panel etc.

Note

- For instructions on using paper not included in the Paper Information List, see "Using Paper Other Than Genuine Paper and feed confirmed Paper."

- Method of Updating Supported Paper
  Paper that is supported by the printer may be newly released on the Canon website.

  To use newly released paper, register the latest paper information on the printer with the Media Configuration Tool. (See "Updating paper information.")

  Important

  - Even if you are not using the printer driver, you should install the Media Configuration Tool in order to register the media types for your region in the printer.

    (See "Media Configuration Tool Guide" (Windows).)

    (See "Media Configuration Tool Guide" (Mac OS).)

Paper Sizes

Rolls

Rolls that meet the following conditions are supported.

- Outer diameter is 6.7 in (170 mm) or less
- Inner diameter of paper core: 2 or 3 inches
- Printing side out

Roll Width	Printer Driver **Roll Paper Width** Settings	Borderless Printing (*1)
609.6 mm (24.00 in)	**24-in. Roll (609.6mm)**	Recommended
594.0 mm (23.39 in)	**ISO A1/A2 Roll (594.0mm)**	Recommended
515.0 mm (20.28 in)	**JIS B2/B3 Roll (515.0mm)**	Recommended
431.8 mm (17.00 in)	**17-in. Roll (431.8mm)**	Recommended
420.0 mm (16.54 in)	**ISO A2/A3 Roll (420.0mm)**	Possible(*2)
406.4 mm (16.00 in)	**16-in. Roll (406.4mm)**	Possible(*2)
355.6 mm (14.00 in)	**14-in. Roll (355.6mm)**	Recommended
329.0 mm (12.95 in)	**A3+ Roll (329.0mm)**	Possible(*2)
300.0 mm (11.81 in)	**300mm Roll (300.0mm)**	Possible(*2)
297.0 mm (11.69 in)	**ISO A3/A4 Roll (297.0mm)**	Possible(*2)
257.0 mm (10.12 in)	**JIS B4 Roll (257.0mm)**	Possible(*2)
254.0 mm (10.00 in)	**10-in. Roll (254.0mm)**	Recommended
203.2 mm (8.00 in)	**8-in. Roll (203.2mm)**	Possible(*2)

*1:For details on media types that can be used for borderless printing, see "Paper Information List."

*2:As opposed to standard borderless printing, there will be a small margin on the left and right because the paper width is set a little bit smaller than the width of the document.

Sheets

Sheets of the following sizes are supported.

Paper Sizes	Dimensions
ISO A1	594.0 × 841.0 mm (23.39 × 33.11 in)
ISO A2	420.0 × 594.0 mm (16.54 × 23.39 in)
ISO A2+	431.8 × 609.6 mm (17.00 × 24.00 in)

Paper Sizes	Dimensions
ISO A3	297.0 × 420.0 mm (11.69 × 16.54 in)
ISO A3+	329.0 × 483.0 mm (12.95 × 19.02 in)
ISO A4	210.0 × 297.0 mm (8.27 × 11.69 in)
ISO B2	500.0 × 707.0 mm (19.69 × 27.83 in)
ISO B3	353.0 × 500.0 mm (13.90 × 19.69 in)
ISO B4	250.0 × 353.0 mm (9.84 × 13.90 in)
JIS B2	515.0 × 728.0 mm (20.28 × 28.66 in)
JIS B3	364.0 × 515.0 mm (14.33 × 20.28 in)
JIS B4	257.0 × 364.0 mm (10.12 × 14.33 in)
22"x34"(ANSI D)	558.8 × 863.6 mm (22.00 × 34.00 in)
17"x22"(ANSI C)	431.8 × 558.8 mm (17.00 × 22.00 in)
11"x17"(Ledger)	279.4 × 431.8 mm (11.00 × 17.00 in)
13"x19"(Super B)	330.2 × 482.6 mm (13.00 × 19.00 in)
Letter(8.5"x11")	215.9 × 279.4 mm (8.50 × 11.00 in)
Legal(8.5"x14")	215.9 × 355.6 mm (8.50 × 14.00 in)
24"x36"(ARCH D)	609.6 × 914.4 mm (24.00 × 36.00 in)
18"x24"(ARCH C)	457.2 × 609.6 mm (18.00 × 24.00 in)
12"x18"(ARCH B)	304.8 × 457.2 mm (12.00 × 18.00 in)
9"x12"(ARCH A)	228.6 × 304.8 mm (9.00 × 12.00 in)
DIN C2	458.0 × 648.0 mm (18.03 × 25.51 in)
DIN C3	324.0 × 458.0 mm (12.76 × 18.03 in)
DIN C4	229.0 × 324.0 mm (9.02 × 12.76 in)
20"x24"	508.0 × 609.6 mm (20.00 × 24.00 in)
18"x22"	457.2 × 558.8 mm (18.00 × 22.00 in)
14"x17"	355.6 × 431.8 mm (14.00 × 17.00 in)
12"x16"	304.8 × 406.4 mm (12.00 × 16.00 in)
10"x12"	254.0 × 304.8 mm (10.00 × 12.00 in)
10"x15"	254.0 × 381.0 mm (10.00 × 15.00 in)

Paper Sizes	Dimensions
8"x10"	203.2 × 254.0 mm (8.00 × 10.00 in)
US Photo 16"x20"	406.4 × 508.0 mm (16.00 × 20.00 in)
Poster 20"x30"	508.0 × 762.0 mm (20.00 × 30.00 in)
13"x22"	329.0 × 558.0 mm (12.95 × 21.97 in)
Poster 300x900mm	300.0 × 900.0 mm (11.81 × 35.43 in)
Custom Paper Size	8.00 × 8.00 in (203.2 × 203.2 mm) to 24.02 × 70.87 in (610.0 × 1800.0 mm)

Note

- For details on non-standard sizes, see "Setting Paper Dimensions (Custom Size)" (Windows) or "Setting Paper Dimensions (Custom Size)" (Mac OS).
- Borderless printing is not supported on sheets.

Using Paper Other Than Genuine Paper and feed confirmed Paper

When using this printer to print on paper other than genuine Canon paper and feed confirmed paper, use paper that meets the following conditions.

Note

- For Canon genuine paper/feed confirmed paper, see "Paper Information List."

- Paper where the size is described in "Paper Sizes" (See "Paper Sizes.")
- Paper where the thickness is described in "Paper Thickness" in "Specifications" (See "Specifications.")
- Paper where bleeding and ink overflow does not occur when printing
- Paper that does not warp severely when loading the paper or printing

Important

- If you use paper other than Canon genuine paper and feed confirmed paper, Canon provides absolutely no guarantees regarding print quality or paper feed properties. For Canon genuine paper/feed confirmed paper, see "Paper Information List."

After loading the paper in the printer, select the media type in the control panel and printer driver and then perform the printing. For the media type, you can select easily from existing settings or you can create and use settings for the paper you are using.

Printing Using Existing Settings

You can print easily by selecting from existing settings provided in the printer control panel and printer driver. (See "Printing on Paper Other Than Genuine Paper and feed confirmed Paper Using Existing Settings.")

Printing Using Additional Settings

You can use the Media Configuration Tool function for adding custom paper to create settings suitable for non-Canon genuine paper/feed confirmed paper and add as a new media type to the printer's Control Panel and the printer driver for printing. (See "Printing on Paper Other Than Genuine Paper and feed confirmed Paper by Adding a Media Type.")

Printing on Paper Other Than Genuine Paper and feed confirmed Paper Using Existing Settings

You can easily print on paper other than genuine Canon paper and feed confirmed paper without making complicated settings by selecting the existing settings provided in the printer control panel and printer driver depending on the media type you are using. The existing settings consist of general-purpose paper settings provided for different media types.

Important

- The Canon genuine paper settings provided in the printer control panel and printer driver are optimized for Canon genuine paper. If these settings are selected for printing on paper other than Canon genuine paper, the ink may bleed or the print head may rub against the paper. To easily print on paper other than Canon genuine paper and feed confirmed paper, we recommend that you select one of the following general-purpose paper settings.

Note

- For an overview of the media types, see "Types of Paper."
- For instructions on selecting the media type with the control panel, see "Types of Paper". For instructions on selecting the media type with the printer driver, see "How to Open the Printer Driver Setup Window" (Windows) or "How to Open the Printer Driver Setup Window" (Mac OS).

Choosing General-Purpose Paper Settings

These settings anticipate a wide variety of paper other than Canon genuine paper and feed confirmed paper, and, therefore, these settings make it difficult for bleeding ink and print head rubbing to occur. For details on the relationships between the conditions of paper other than Canon genuine paper and feed confirmed paper and the media type to select, see "Paper Information List."

Note

- If you cannot obtain the desired results by selecting the general-purpose paper settings, use the custom paper adding function in Media Configuration Tool to create settings suitable for the paper you are using. For details, see "Printing on Paper Other Than Genuine Paper and feed confirmed Paper by Adding a Media Type."

Printing on Paper Other Than Genuine Paper and feed confirmed Paper by Adding a Media Type

Media Configuration Tool provides a function for adding custom paper for better print quality and improved paper feed properties when printing on paper other than Canon genuine paper/feed confirmed paper than when printing with general-purpose settings. You can use this function to configure settings such as the amount of ink used and the height of the print head according to the characteristics of the paper being used, and thereby realize higher print quality. Also, you can add the settings created with this function as a new media type to the printer control panel and printer driver.

For details on Media Configuration Tool, refer as follows.

- Media Configuration Tool Guide (Windows)
- Media Configuration Tool Guide (Mac OS)

Important

- For details on how to select the added media type in the control panel, see "Changing the Type of Paper."
- You can select the media type to be used in printing from **Media Type** in the **Main** sheet (Windows) or **Quality & Media** (Mac OS) in the printer driver. For details, see "Main Tab Description" (Windows) or "Quality & Media" (Mac OS).
- We recommend that you use an ICC profile created using commercially available profile creation software to perform color management accurately on paper other than Canon genuine paper and feed confirmed paper. You can register the ICC profile you created when creating a custom paper with Media Configuration Tool.

  (See "Adding Custom Paper" (Windows).)

  (See "Adding Custom Paper" (Mac OS).)

Updating paper information

You can update the printer's media information to the latest information by applying the latest version of the **Media Information File**.

For details on the procedure for applying the **Media Information File**, refer to the following.

- Media Configuration Tool Guide (Windows)
- Media Configuration Tool Guide (Mac OS)

Important

- If you are using the Media Configuration Tool, the new **Media Information File** is downloaded automatically when released on the Canon website. A computer connected to the Internet is required to download the **Media Information File**.

Handling rolls

- Loading Rolls on the Roll Holder
- Loading the Upper Roll on the Printer
- Loading the Lower Roll on the Roll Unit (Option)
- Changing the Type of Paper
- Specifying the Paper Length
- Removing the Upper Roll from the Printer
- Removing the Lower Roll from the Roll Unit (Option)
- Removing Rolls From the Roll Holder
- Feeding Roll Paper Manually
- Keeping Track of the Amount of Roll Paper Left
- Specifying the Ink Drying Time for Rolls
- Specifying the Cutting Method for Rolls
- Cutting the Leading Edge of Roll Paper Automatically
- Reducing Dust from Cutting Rolls
- Roll Holder Set
- Automatically Switch Rolls

Loading Rolls on the Roll Holder

When printing on roll paper, attach the roll paper to the Roll Holder.

Roll paper comes in two types: 2-inch and 3-inch cores. If using 3-inch core roll paper, attach the 3-Inch Paper Core Attachment to the Roll Holder and holder stopper.

Caution

- Set the roll on a table or other flat surface so that it does not roll or fall. Rolls are heavy, and dropping a roll may cause injury.

Important

- When handling the roll, be careful not to soil the printing surface. This may affect the printing quality. We recommend wearing clean cloth gloves when handling rolls to protect the printing surface.
- Cut the edge of the roll paper if it is uneven, dirty, or has tape residue. Otherwise, it may cause feeding problems and affect the printing quality. Be careful not to cut through any barcodes printed on the roll.

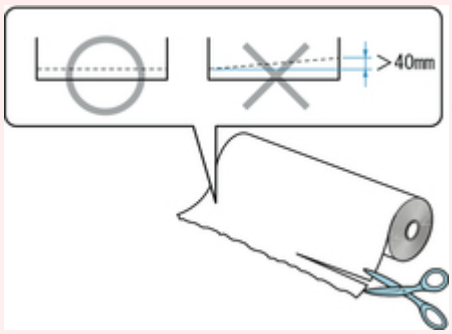

- Align the edges of the paper on both ends of the roll. This may cause feeding problems.

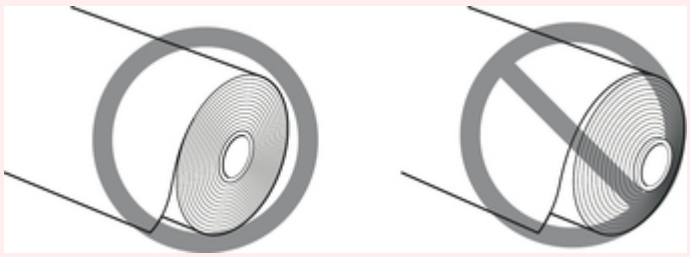

Note

- For details on roll paper sizes and types that can be used, see "Paper Sizes" or "Paper Information List".

1. Push holder stopper lever (A) toward shaft to release lock, and while holding in position (B), remove holder stopper from Roll Holder.

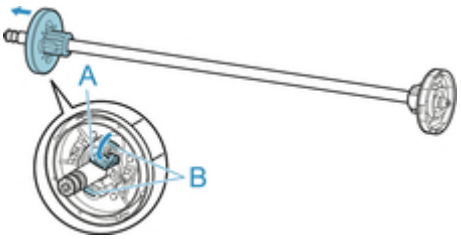

Important

- Do not use the roll holder for feeding paper with the spacer (A) removed from the flange. It will result in the paper being sent askew.

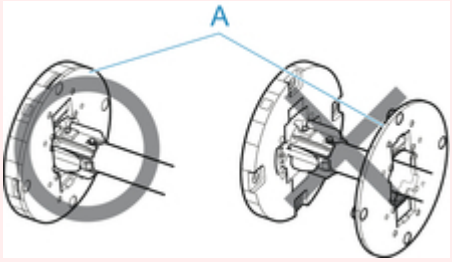

2. If using 3-inch core paper, align 3-Inch Paper Core Attachment tabs (A) with Roll Holder holes (B) and insert firmly.

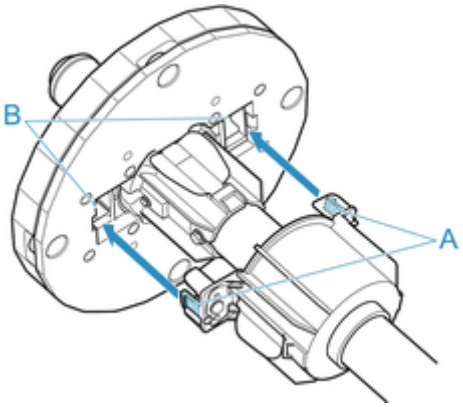

3. With leading edge of roll paper facing forward as shown, insert Roll Holder from right side of roll. Insert firmly until roll paper touches flange (A) of Roll Holder.

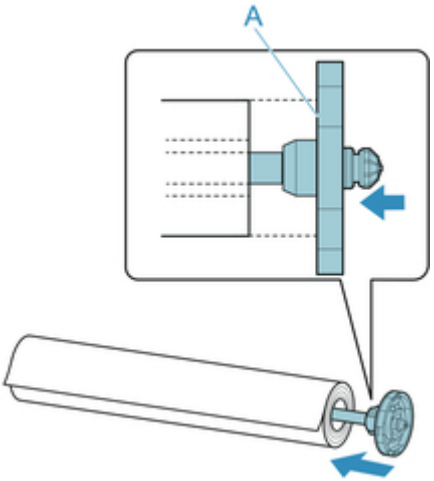

Important

- When loading a roll, be careful to avoid hitting the printer hard with the roll. This may damage the Roll Holder.

4. If using 3-inch core roll paper, attach 3-Inch Paper Core Attachment to holder stopper.

   Align the tabs (A) of the attachment with the holes (B) of the holder stopper, and insert firmly.

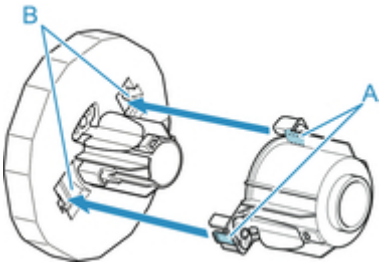

5. Insert holder stopper from left into Roll Holder as shown, and while holding in position (B), push firmly until holder stopper flange (A) touches roll paper. Lift holder stopper lever (C) from shaft to lock.

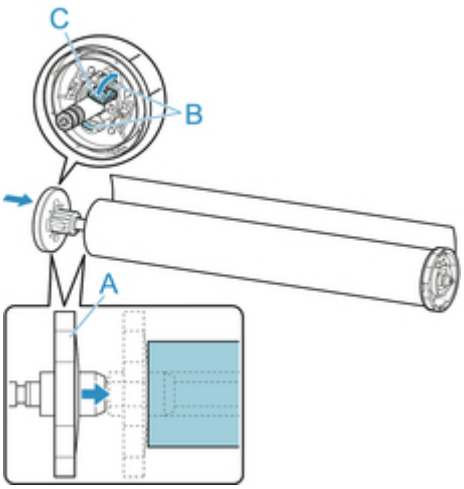

Loading the Upper Roll on the Printer

Follow these steps to load rolls in the printer.

Important

- Always load rolls when the printer is on. If the printer is off when you load a roll, the paper may not be advanced correctly when you turn the printer on.
- Before loading a roll, confirm whether the inside of the top cover or the output guide is soiled. If these areas are dirty, we recommend cleaning them in advance. (See "Cleaning Inside the Top Cover.").

Note

- When using the optional roll unit, you can also load roll paper on the roll unit separately from the printer that is described here. (See "Loading the Lower Roll on the Roll Unit (Option).")

1. Tap paper settings display area on Home screen of touch screen.

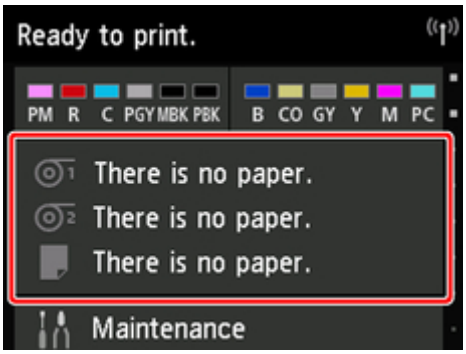

Note

- If the Home screen does not appear, tap the **Home** button.

2. Tap area.

3. Tap **Load paper.** or **Replace paper**, check message that appears, and then tap **Yes**.

Note

- If any cut sheet has been fed, or roll paper that will not be used has been fed from Roll 1 (Upper), a message is shown requesting you to remove it.

  After following the instructions on the screen to remove the paper, redo the operation.
- If roll paper is loaded in Roll 1 (Upper) but Roll 1 (Upper) is not selected as the paper source, a message asking you whether or not to change paper is displayed.

  Tap **Replace paper**, remove the paper, and go to the next step.

4. Open top cover and lift output guide.

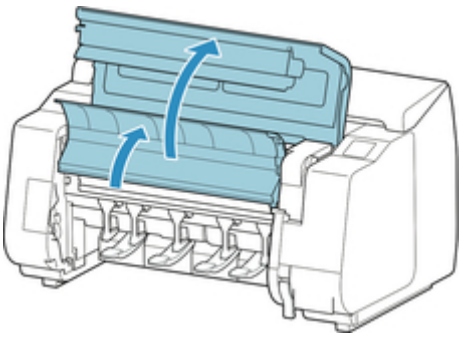

5. Hold flanges (A) so that roll holder's white gear is on left, align roll holder shaft with roll holder slot left and right guide grooves (B), and load.

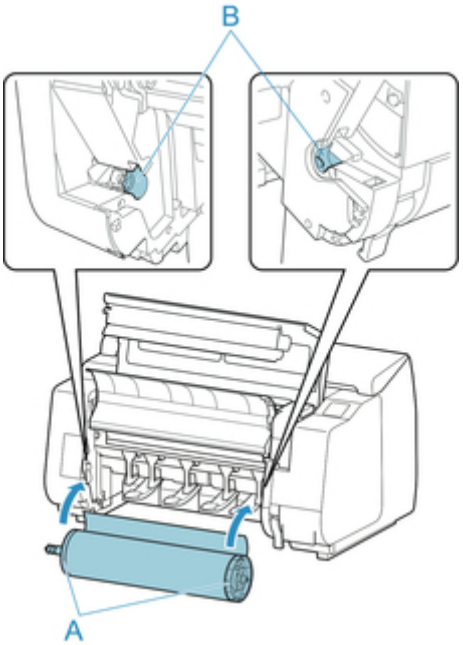

Caution

- Be careful not to drop the roll and hurt yourself when loading it.
- Be careful not to pinch your fingers between the Roll Holder shaft and the guide grooves (B) when loading the roll paper.

Important

- If the leading edge of the roll paper is secured with tape or a paper band so that it will not unravel, remove the tape or paper band before loading the roll paper into the roll holder slot.

  If you load the paper into the roll holder slot with the leading edge secured, only part of the roll paper is fed to the paper feed slot, resulting in damage to the roll paper.

Note

- For the procedure for attaching the roll paper to the Roll Holder, see "Loading Rolls on the Roll Holder."

6. Pull out roll paper evenly, insert leading edge between roll paper and arrows (A) directly beneath it, and feed roll paper until you hear a sound.

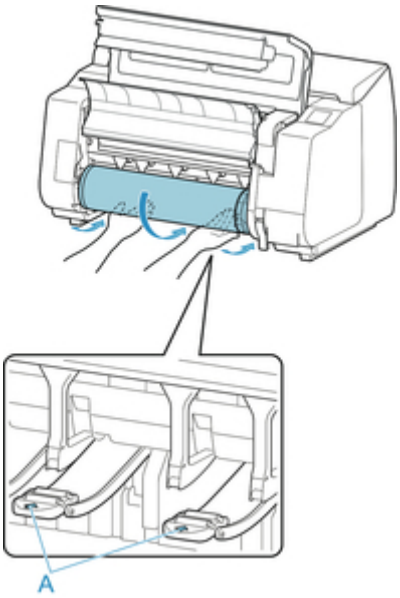

Important

- If the roll paper has become unwound, remove the slack before loading the roll paper.
- When feeding the leading edge of the roll paper, make sure the entire width of the roll paper is separating and feeding from the roll. If the roll paper is fed with some of the roll paper still stuck to the roll, the roll paper will be damaged.
- Be careful not to soil the printing surface of roll paper as you insert it in the slot. This may affect the printing quality. We recommend wearing clean cloth gloves when handling rolls to protect the printing surface.
- If the paper is wrinkled or warped, straighten it out before loading it.
- Load the roll so that there is no gap between the right edge of the paper and the Roll Holder.

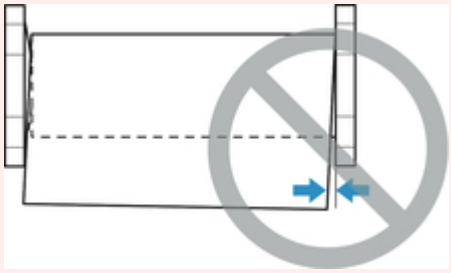

- Depending on the paper, the roll paper may be scratched when being fed and not feed well. In this case, you must feed the paper manually after setting **Paper retention setting** to **Release** on the touch screen. Lift the release lever, advance the roll paper until its leading edge appears on platen, lower the release lever, and then proceed to the next step. However, if **Paper retention setting** is set to **Release**, automatic switching of the upper and lower rolls is not possible.

7. Lower output guide.

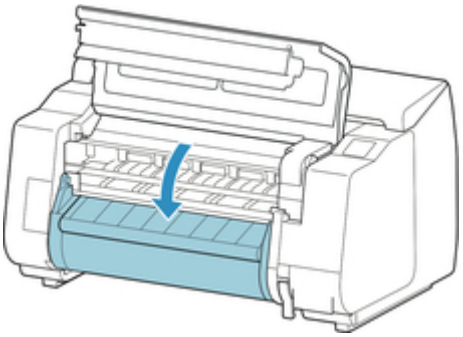

8. Close top cover.

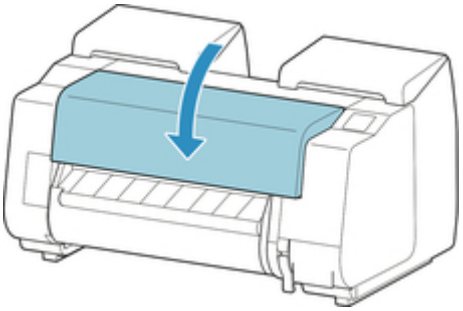

9. Tap **Start feeding**.

   The paper is now advanced.

10. Once paper feeding starts, you will need to do the following, based on the **Manage remaining roll amount** setting and the barcode printed on rolls. (See "Keeping Track of the Amount of Roll Paper Left.")

Manage remaining roll amount	**Barcodes**	**Printer Operation After the Paper is Fed**
Disable	Printed	A menu for selecting the media type appears on the touch screen. Operate the touch screen and select the media type to be used.
	Not printed	
Enable	Printed	The type and amount of paper left is automatically detected based on the barcode printed on the roll. There is no need to specify the type and length of the paper.
	Not printed	A menu for selection of the media type and length is shown on the touch screen. Operate the touch screen, select the media type to be used, and enter its length.

Important

- Cut the edge of the roll using the **Cut paper** function if the edge is creased or soiled. (See "Specifying the Cutting Method for Rolls.")

- When selecting the media type on the touch screen, make sure the media type set in the printer driver and the media type loaded on the printer match.

Note

- For details on media types that you can select, see "Paper Information List."
- Adjusting the printhead alignment with the type of paper to be used in printing may enhance printing quality. (See "Automatic Adjustment to Straighten Lines and Colors.")

Loading the Lower Roll on the Roll Unit (Option)

Follow these steps to load roll paper in the roll unit (Roll 2 (Lower)).

Important

- Always load rolls when the printer is on. If the printer is off when you load a roll, the paper may not be advanced correctly when you turn the printer on.
- Before loading a roll, confirm whether the inside of the top cover or the output guide is soiled. If these areas are dirty, we recommend cleaning them in advance. (See "Cleaning Inside the Top Cover.").
- If using the roll unit as the feed device, depending on the basket position, the ejected roll paper's cut end enters the roll unit and may cause a paper jam or affect the print quality when set to "Borderless Printing" or "Trim Edge First" when loading the paper. In this case, change the basket position, and then print. (See "Example Basket Configurations.")

1. Tap paper settings display area on Home screen of touch screen.

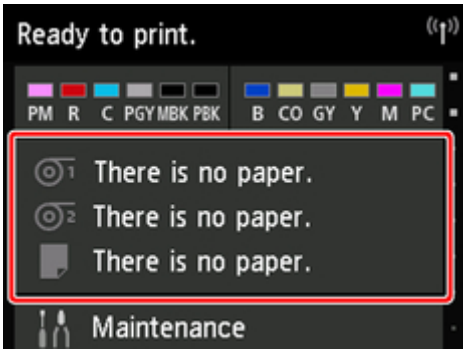

Note

- If the Home screen does not appear, tap the **Home** button.

2. Tap area.

3. Tap **Load paper.** or **Replace paper**, check message that appears, and then tap **Yes**.

Note

- If any cut sheet has been fed, or roll paper that will not be used has been fed from Roll 1 (Upper), a message is shown requesting you to remove it.

  After following the instructions on the screen to remove the paper, redo the operation.
- If roll paper is loaded in Roll 1 (Upper) but Roll 1 (Upper) is not selected as the paper source, a message asking you whether or not to change paper is displayed.

  Tap **Replace paper**, remove the paper, and go to the next step.

4. Change **Roll Holder Lock** switch on roll unit to release position.

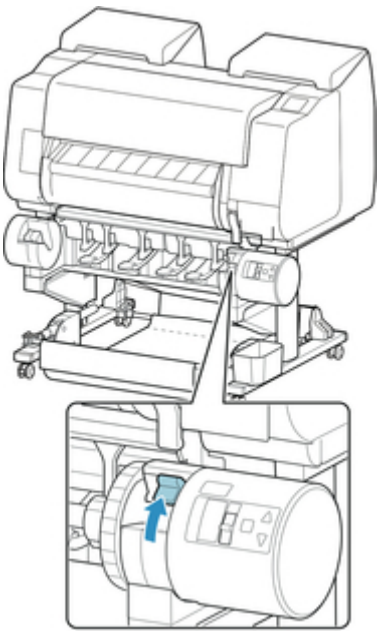

5. Hold flanges (A) so that roll holder's white gear is on left, align roll holder shaft with roll holder slot left and right guide grooves (B), and load.

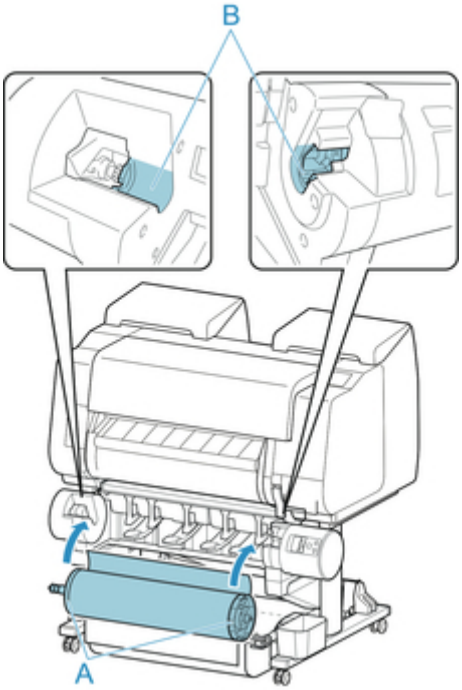

Caution

- Be careful not to drop the roll and hurt yourself when loading it.
- Be careful not to pinch your fingers between the Roll Holder shaft and the guide grooves (B) when loading the roll paper.

Important

- If the leading edge of the roll paper is secured with tape or a paper band so that it will not unravel, remove the tape or paper band before loading the roll paper into the roll holder slot.

  If you load the paper into the roll holder slot with the leading edge secured, only part of the roll paper is fed to the paper feed slot, resulting in damage to the roll paper.

Note

- For the procedure for attaching the roll paper to the Roll Holder, see "Loading Rolls on the Roll Holder."

6. Change **Roll Holder Lock** switch on roll unit to locked position.

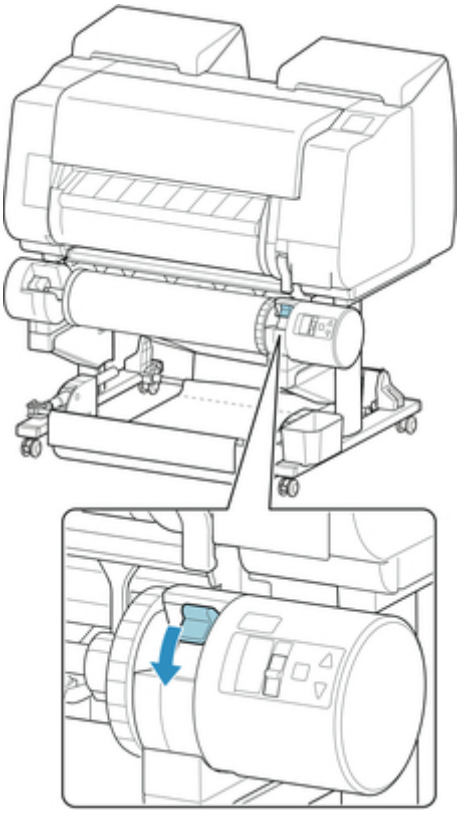

7. Change feed flap switch on top of roll unit to feed icon position on the left.

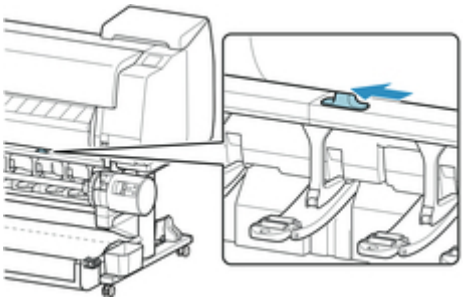

8. Pull out roll paper evenly, insert leading edge between roll paper and arrows (A) directly beneath it, and feed roll paper until you hear a sound.

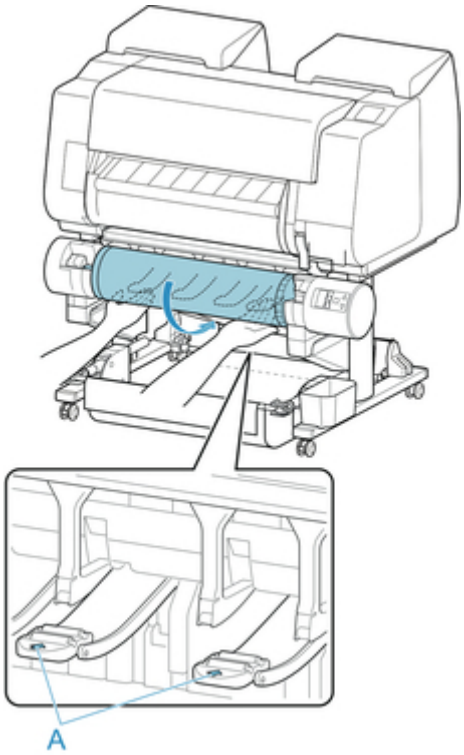

Important

- If the roll paper has become unwound, remove the slack before loading the roll paper.
- When feeding the leading edge of the roll paper, make sure the entire width of the roll paper is separating and feeding from the roll. If the roll paper is fed with some of the roll paper still stuck to the roll, the roll paper will be damaged.
- Be careful not to soil the printing surface of roll paper as you insert it in the slot. This may affect the printing quality. We recommend wearing clean cloth gloves when handling rolls to protect the printing surface.
- If the paper is wrinkled or warped, straighten it out before loading it.
- Load the roll so that there is no gap between the right edge of the paper and the Roll Holder.

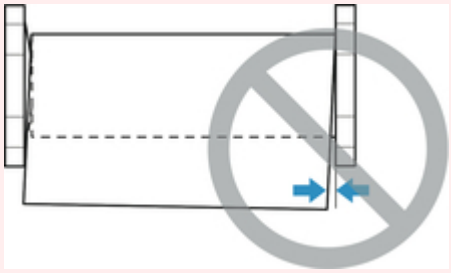

- Depending on the paper, the roll paper may be scratched when being fed and not feed well. In this case, you must feed the paper manually after setting **Paper retention setting** to **Release** on the touch screen. Lift the release lever, advance the roll paper until its leading edge appears on platen, lower the release lever, and then proceed to the next step. However, if **Paper retention setting** is set to **Release**, automatic switching of the upper and lower rolls is not possible.

9. Tap **Start feeding**.

   The paper is now advanced.

10. Once paper feeding starts, you will need to do the following, based on the **Manage remaining roll amount** setting and the barcode printed on rolls. (See "Keeping Track of the Amount of Roll Paper Left.")

Manage remaining roll amount	**Barcodes**	**Printer Operation After the Paper is Fed**
Disable	Printed	A menu for selecting the media type appears on the touch screen. Tap media type loaded.
	Not printed	
Enable	Printed	The type and amount of paper left is automatically detected based on the barcode printed on the roll. There is no need to specify the type and length of the paper.
	Not printed	A menu for selecting the media type and length appears on the touch screen. After tapping the media type loaded, enter the length of the paper loaded on the touch screen.

Important

- Cut the edge of the roll using the **Cut paper** function if the edge is creased or soiled. (See "Specifying the Cutting Method for Rolls.")
- When selecting the media type on the touch screen, make sure the media type set in the printer driver and the media type loaded on the printer match.

Note

- For details on media types that you can select, see "Paper Information List."
- Adjusting the printhead alignment with the type of paper to be used in printing may enhance printing quality. (See "Automatic Adjustment to Straighten Lines and Colors.")

Changing the Type of Paper

Follow these steps to change the type of paper specified on the printer after you have loaded paper.

If you continue using the same type of paper and set **Keep media type** to **Enable**, when you load paper, the media type selected before **Enable** was set is selected automatically, eliminating the need to set the media type. (See "Using the Same Type of Paper Regularly.")

Important

- For best printing results, the printer fine-tunes the print head height and the feed amount for each type of paper. Be sure to select the type of paper to use correctly before printing.
- Because the printer fine-tunes the feed amount for each type of paper, the margins and the size of printed images may vary depending on the type of paper used. If margins and the size of images are not as you expected, adjust the paper feed amount.

  (See "Adjusting Feed Amount.")
- Rolls and sheets have different printing areas, and sheets having a larger bottom margin than rolls.

  (See "Print Area.")

Changing the Type of Paper

Note

- When you load roll paper, a menu for selecting the media type appears on the touch screen. Tap the media type.

  If no barcode has been printed on the roll paper and you have set **Manage remaining roll amount** to **Enable**, specify the roll length after selecting the media type. (See "Specifying the Paper Length.")

1. Tap paper settings display area on Home screen of touch screen.

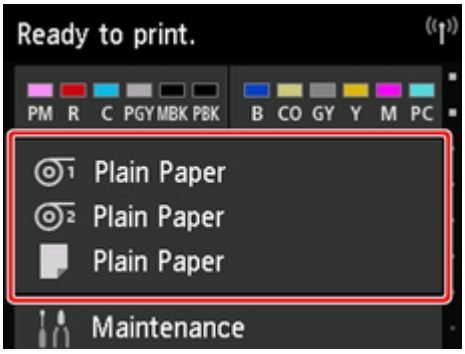

Note

- If the Home screen does not appear, tap the **Home** button.

2. Tap paper feed slot where paper whose type you want to change is loaded.

3. Tap **Paper settings**.

4. Tap **Type**.

5. Tap media type of roll paper loaded in printer.

Important

- Be sure to select the correct paper type. If this setting does not match the loaded paper, it may cause feed errors and affect printing quality.

Note

- For details on media types, see "Paper Information List." At the factory default settings, Plain Paper is selected for the media type.
- When the release lever is operated, the settings automatically return to the last selected media type.

Using the Same Type of Paper Regularly

Configure this setting so that current media type settings will be automatically selected when you load the same type of paper later.

1. Tap **Device settings** on Home screen of touch screen.

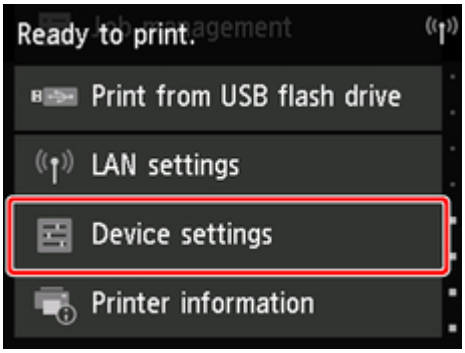

Note

- If the Home screen does not appear, tap the **Home** button.

2. Tap **Paper-related settings**.

3. Tap **Keep media type**.

4. Tap **Enable**.

Note

- The specified media type setting is updated in the following situations.
  - When using sheets, if you send a print job before loading a sheet, the media type setting is updated to match the type of paper specified by the print job.
  - If a barcode is printed on the roll paper and you have set **Manage remaining roll amount** to **Enable** in the operation panel menu, the media type setting is updated to match the media type specified by the barcode.
- To change the media type setting, see "Changing the Type of Paper."

Specifying the Paper Length

When changing the length of paper after the paper has been advanced, specify the length as follows.

Note

- Specify the roll paper length when you have set **Manage remaining roll amount** to **Enable**. (See "Keeping Track of the Amount of Roll Paper Left.")

1. Tap paper settings display area on Home screen of touch screen.

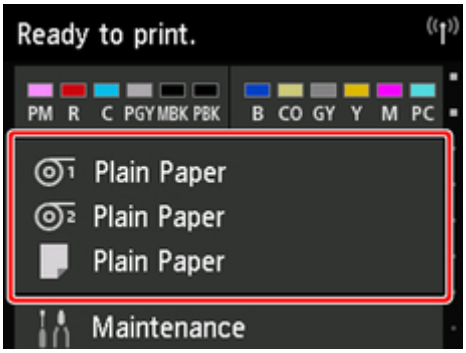

Note

- If the Home screen does not appear, tap the **Home** button.

2. Tap paper feed slot where paper whose length you want to change is loaded.

3. Tap **Paper settings**.

4. Tap **Length**.

5. Enter roll paper length.

   Specify the roll length as follows.

   1. Tap the gray numerical input field.
   2. Tap the keypad appearing on the touch screen, enter the roll paper length, and then tap **OK**.
   3. Check the entered length and tap **OK**.

Removing the Upper Roll from the Printer

Remove rolls from the printer as follows.

Note

- If you need to cut a printed roll, select **Feed/cut** in the printer menu and cut the roll paper at the desired position. (See "Specifying the Cutting Method for Rolls.")

1. Tap paper settings display area on Home screen of touch screen.

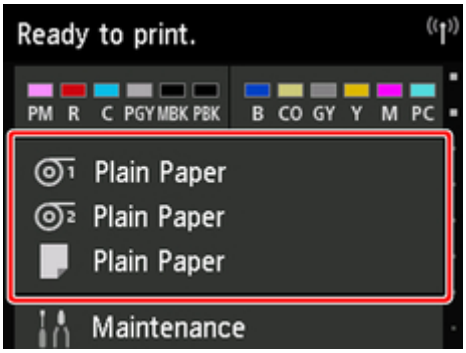

Note

- If the Home screen does not appear, tap the **Home** button.

2. Tap area.

3. Tap **Remove paper**.

4. Tap **Yes**.

   The roll is rewound.

Important

- If **Manage remaining roll amount** is set to **Enable** in the operation panel menu, a barcode is printed on the leading edge of the roll paper.

  Do not remove the roll before the barcode is printed. You will be unable to keep track of the amount of roll paper left. (See "Keeping Track of the Amount of Roll Paper Left.")

5. Open top cover and lift output guide.

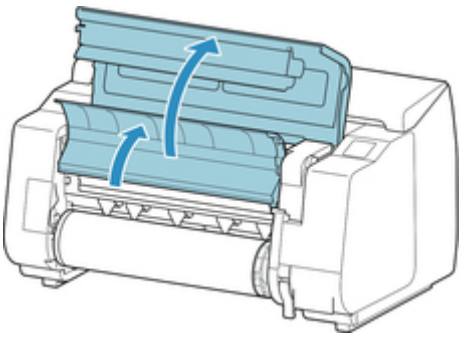

6. Using both hands, rotate the Roll Holder in the direction of the arrow to rewind the roll.

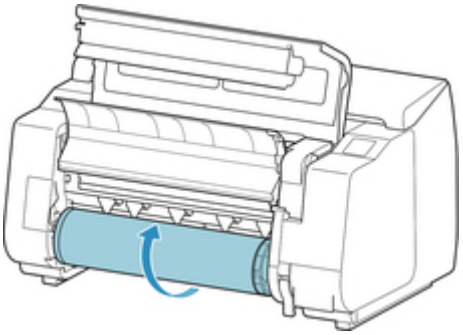

7. Hold Roll Holder by its flanges (A) and remove from roll holder slot.

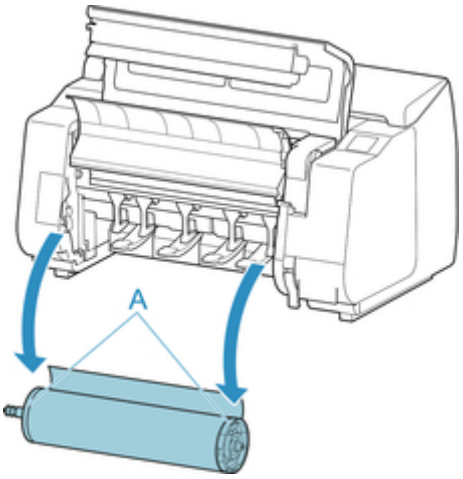

Note

- For instructions on removing the Roll Holder from rolls, see "Removing Rolls From the Roll Holder."

8. Lower output guide and close top cover.

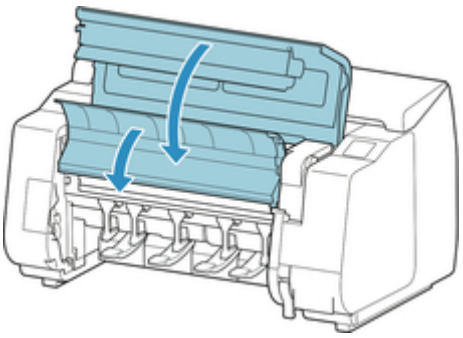

Note

- To load new paper in the printer at this point, see "Loading the Upper Roll on the Printer."
- Clean inside the top cover before loading paper.

  (See "Cleaning Inside the Top Cover.")

Removing the Lower Roll from the Roll Unit (Option)

Follow these steps to remove roll paper from the roll unit.

Note

- If you need to cut a printed roll, select **Feed/cut** in the printer menu and cut the roll paper at the desired position. (See "Specifying the Cutting Method for Rolls.")

1. Tap paper settings display area on Home screen of touch screen.

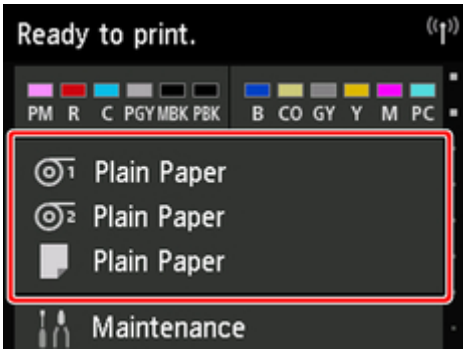

Note

- If the Home screen does not appear, tap the **Home** button.

2. Tap area.

3. Tap **Remove paper**.

4. Check touch screen message and tap **Yes**.

   The roll is rewound.

Important

- If **Manage remaining roll amount** is set to **Enable** in the operation panel menu, a barcode is printed on the leading edge of the roll paper.

  Do not remove the roll before the barcode is printed. You will be unable to keep track of the amount of roll paper left. (See "Keeping Track of the Amount of Roll Paper Left.")

5. Using both hands, rotate roll holder in direction of arrow to rewind roll paper.

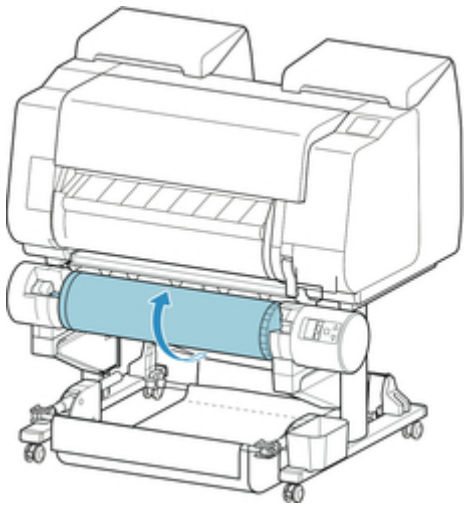

6. Change **Roll Holder Lock** switch on roll unit to release position.

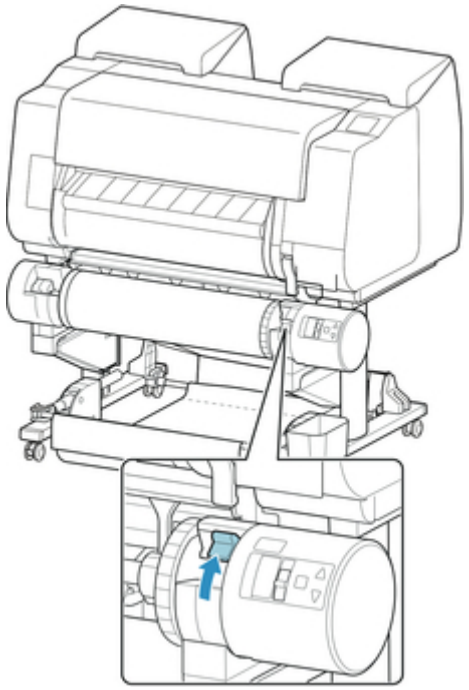

7. Hold roll holder by its flanges (A) and remove from roll holder slot.

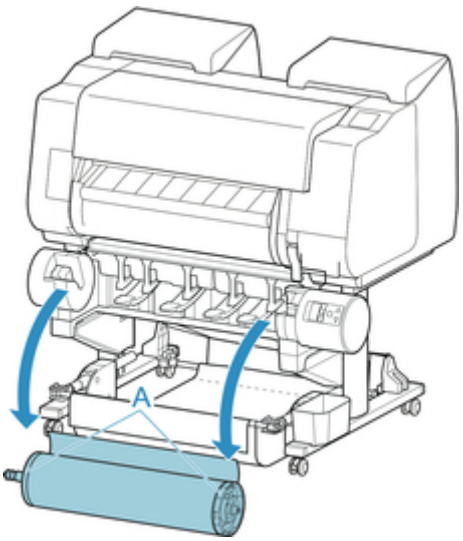

Note

- For instruction on removing the roll paper from the roll holder, see "Removing Rolls From the Roll Holder."
- To load new paper in the printer at this point, see "Loading the Upper Roll on the Printer."

Removing Rolls From the Roll Holder

1. Push holder stopper lever (A) toward shaft to release lock, and while holding in position (B), remove holder stopper from roll holder.

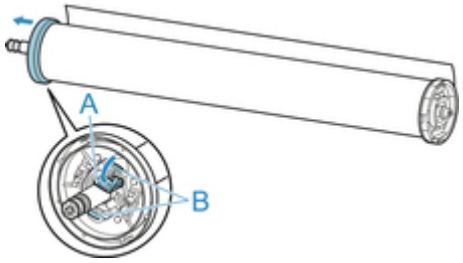

2. Remove roll holder from roll paper.

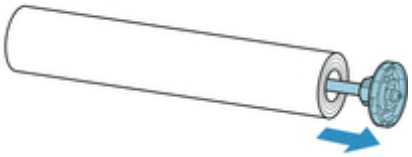

3. To remove 3-Inch Paper Core Attachment, press tabs (A) inward and remove attachment.

   - roll holder Side

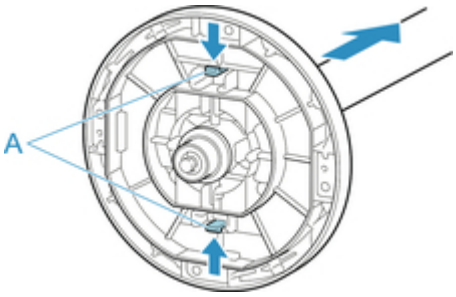

   - holder stopper Side

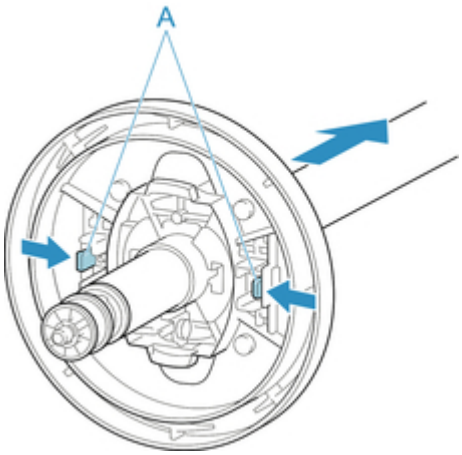

Important

- Store the roll in the original bag or box, away from high temperature, humidity, and direct sunlight. If paper is not stored properly, the printing surface may become scratched, which may affect the printing quality when you use it again.

Feeding Roll Paper Manually

After feeding the roll paper, you can move it forward and back.

1. Tap paper settings display area on Home screen of touch screen.

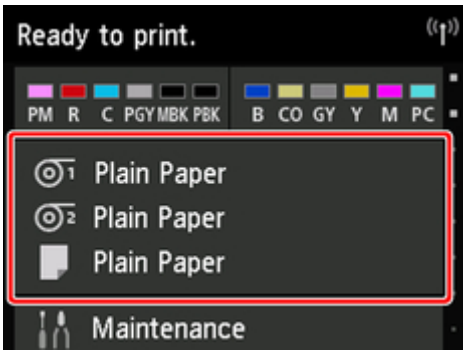

Note

- If the Home screen does not appear, tap the **Home** button.

2. Tap or area.

3. Tap **Feed/cut**.

4. Tap or touch **Advance** and **Rewind** to move roll paper forward or back.

Note

- Tapping **Advance** or **Rewind** moves the roll paper approximately 0.04 inches (1 mm).

  Touching **Advance** or **Rewind** moves the roll paper until you release the key. If "**Cannot advance the paper any more.**" appears on the touch screen, release the key.

5. Tap **OK** when you have determined position of roll paper.

Keeping Track of the Amount of Roll Paper Left

When you set **Manage remaining roll amount** to **Enable** in **Device settings** on the Home screen, the amount of remaining roll paper and the media type information are printed as a barcode and text when the paper is removed. When **Manage remaining roll amount** is set to **Enable** and you load roll paper with a printed barcode, the media type and remaining amount are automatically detected after the roll paper is loaded. The barcode will be cut off after it has been read.

Important

- If the barcode on the roll paper is not detected, enter the media type and length on the touch screen.

Follow the steps below when setting **Manage remaining roll amount** to **Enable**.

1. Tap **Device settings** on Home screen of touch screen.

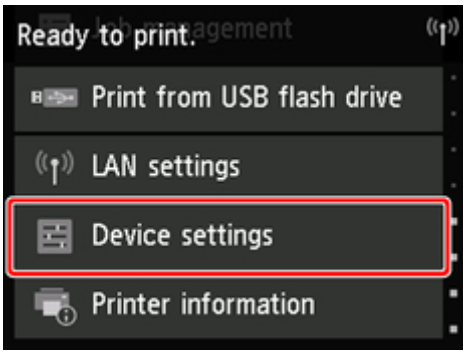

Note

- If the Home screen does not appear, tap the **Home** button.

2. Tap **Paper-related settings**.

3. Tap **Manage remaining roll amount**.

4. Tap **Enable**.

Specifying the Ink Drying Time for Rolls

When you are using paper that takes longer for ink to adhere, ink may be transferred onto the paper surface during ejection, soiling it. In that case, you may be able to improve the condition by setting the time to wait for the ink to dry after printing.

Note

- If the Cutter touches the print surface on which the ink is not dry, the paper surface may become scratched or soiled, or the paper surface may rub when the paper falls and the surface may become soiled.

  To wait for the ink to dry without allowing printed materials to fall after printing, set **Cutting mode** on the printer menu to **Eject cut**. (See "Specifying the Cutting Method for Rolls.")
- The settings can also be made from the touch screen on the printer. From **Paper settings**, select **Paper settings** > **Advanced** and set **Pause between scans** and **Pause between pages**.

Windows

1. Display the printer driver dialog box.

   (See "How to Open the Printer Driver Setup Window.")

2. Select **Main** sheet and click **Specify** for **Media Type**.

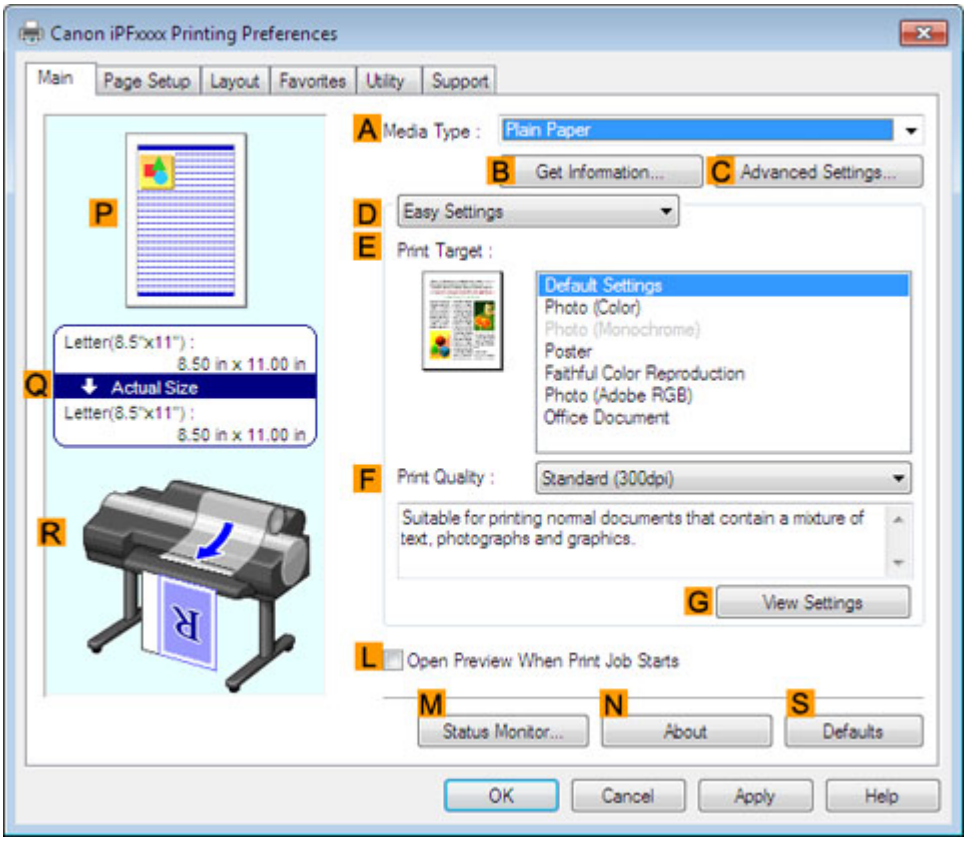

3. In the **Paper Detailed Settings** dialog box displayed next, select the desired values from the lists for **Between Pages** and **Between Scans** in **Drying Time**, and then click **OK**.

   (See "Main Tab Description.")

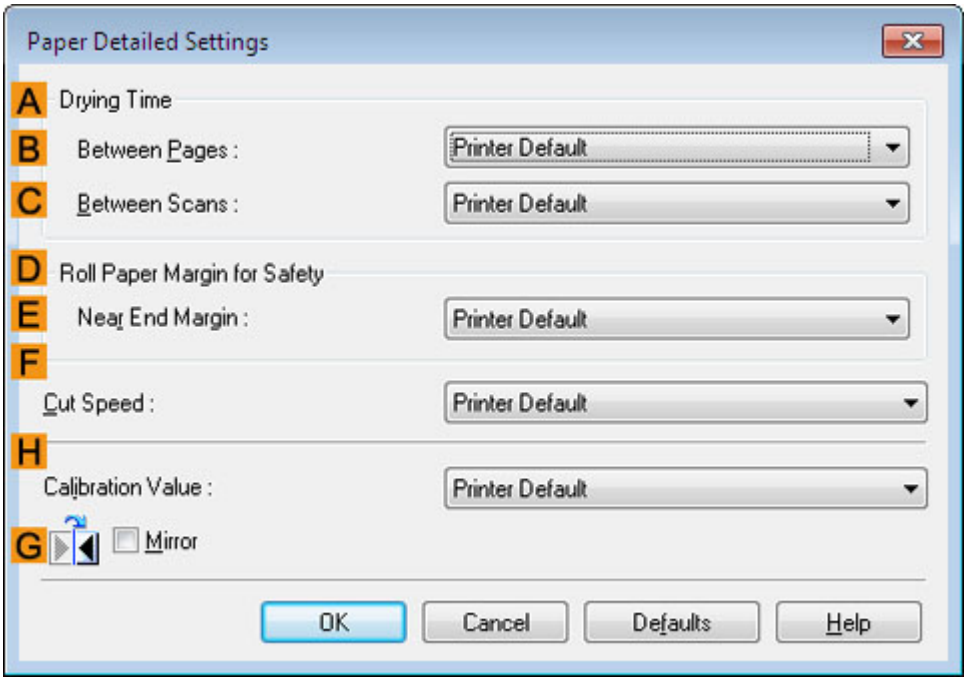

Mac OS

1. Choose **Print** in the application menu.

2. Select **Paper Detailed Settings** panel.

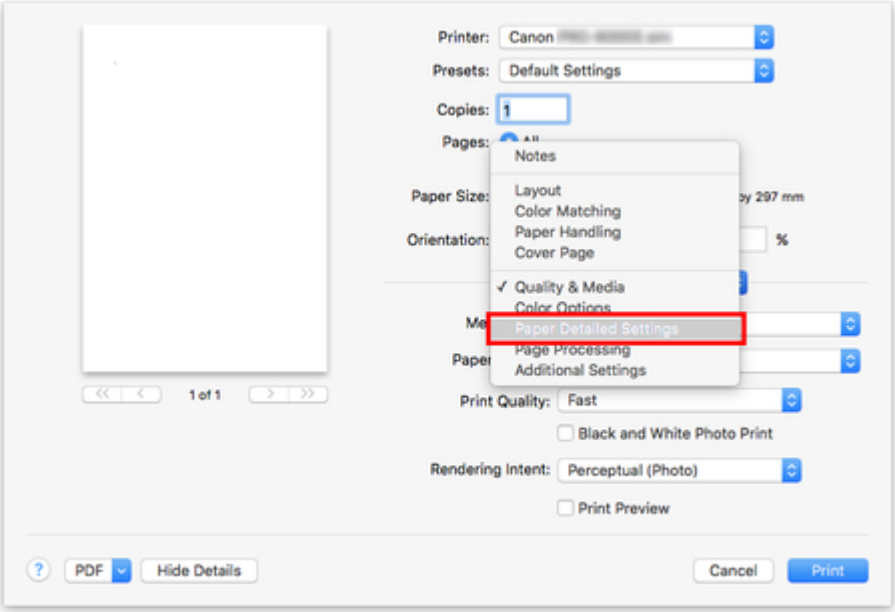

3. Select desired values from lists for **Dry Time (Between Pages)** and **Dry Time (Between Scans)**.

   (See "Paper Detailed Settings.")

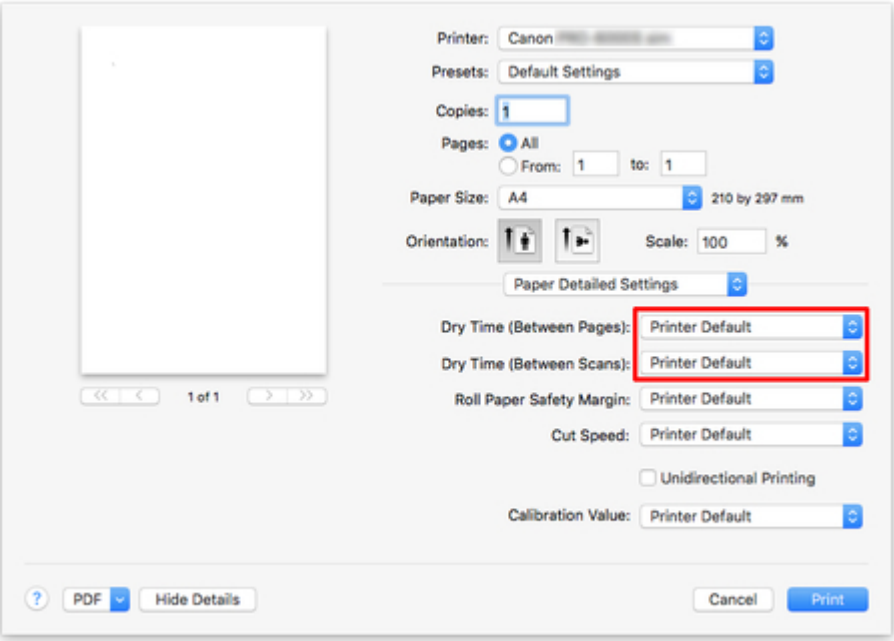

Specifying the Cutting Method for Rolls

How rolls are cut after ejection varies depending on printer settings.

<table>
<tr><th colspan="2">Cutting Method</th><th colspan="2">Printer Setting</th><th colspan="2">Driver Setting</th></tr>
<tr><td>Automatic cut</td><td>The roll is automatically cut by the cutter blade according to the printer driver settings.</td><td rowspan="3">Roll Paper 1/Roll Paper 2 > Paper settings > Advanced > Cutting mode</td><td>Automatic cut</td><td rowspan="4">Automatic Cutting
See "Cutting Roll Paper after Printing" (Windows).
See "Cutting Roll Paper after Printing" (Mac OS).</td><td>Yes</td></tr>
<tr><td>Eject (when the paper surface is being scratched / to wait for ink to dry)</td><td>Select this to move the cutter by touch screen operation and cut paper. With Automatic cut, the paper drops and may rub against the basket, resulting in damage to the print surface, but you can cut using this method and supporting the paper so that it does not drop to avoid damage to the paper. Also, you can prevent paper that has not dried from dropping by visually checking the ink has dried, and then cutting the paper.
After printing, tap Cut paper and cut the roll paper on the cutter blade.</td><td>Eject cut</td><td>Yes</td></tr>
<tr><td>Manual (when using media that cannot be cut with the cutter blade)</td><td>Select this if the paper cannot be cut on the cutter blade.
Cut each page from the roll using scissors. For continuous printing (if you will cut each page later), select Automatic Cutting > Yes or select Print Cut Guideline.</td><td>User cut</td><td>No, Yes, Print Cut Guideline</td></tr>
<tr><td>Paper cutting (to have the roll cut at your specified position)</td><td>Select this when you want to cut the roll paper by operating the cutter blade using the touch screen after printing with No or Print Cut Guideline selected in Automatic Cutting in the printer driver.
Otherwise choose this option if you want to cut the roll edge after loading a roll.</td><td>Roll Paper 1/Roll Paper 2 > Feed/cut > Cut paper</td><td>Yes</td><td>No, Print Cut Guideline</td></tr>
</table>

Note

- Automatic and Eject are valid only when you have selected **Automatic Cutting** > **Yes** in the printer driver.
- With Eject, printing does not resume after a series of jobs have been printed continuously until the roll is cut.
- **Eject cut** is the preset selection in **Cutting mode** for some types of paper. For this paper, we recommend keeping the preset cutting mode.

- If documents printed using Automatic, Eject, or manual cutting are short, rolls are advanced a specific amount before cutting to prevent problems with cutting and paper ejection. This may create a wider bottom margin, in some cases.

Cut rolls manually in the following cases:

Eject (when the paper surface is being scratched / to wait for ink to dry)

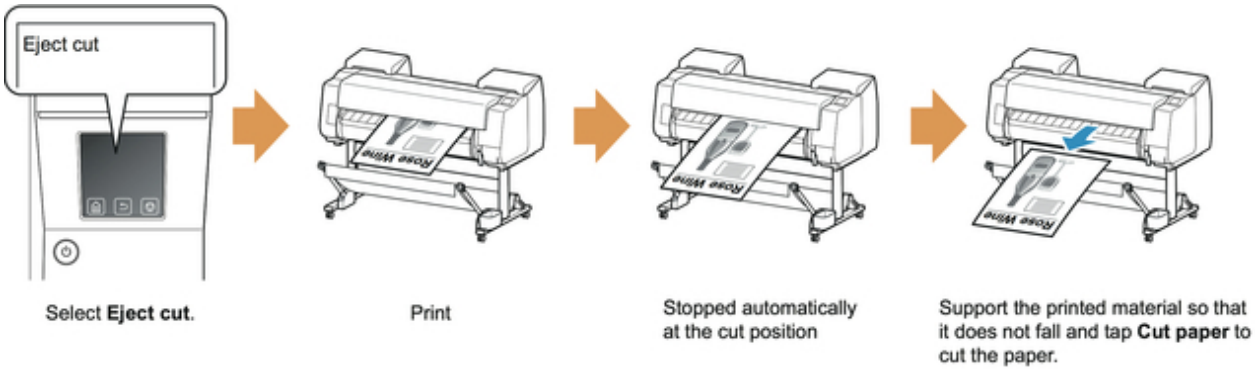

Important

- When cutting wide printed documents after ejection, have two people support the documents. If the paper drops, printed documents may be damaged.
- Do not lift the paper when holding printed documents before cutting. If the paper rises, it may affect the printing quality or cause rough cut edges.

Note

- Once the following step has been performed, the procedure can be started from step 7 the next time.
  - Printing the second and subsequent times
  - Printing after replacing with the same type of paper

1. Tap paper settings display area on Home screen of touch screen.

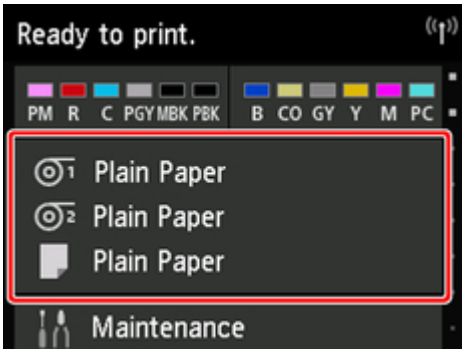

Note

- If the Home screen does not appear, tap the **Home** button.

2. Tap paper feed slot where roll paper for which you want to set cutting method is loaded.

3. Tap **Paper settings**.

4. Tap **Advanced**.

5. Tap **Cutting mode**.

6. Tap **Eject cut**.

7. Print the job.

   When printing is finished, the printer will stop without cutting.

8. While holding printed document to prevent it from dropping, tap **Cut paper** to cut roll paper.

Manual (when using media that cannot be cut with the cutter blade)

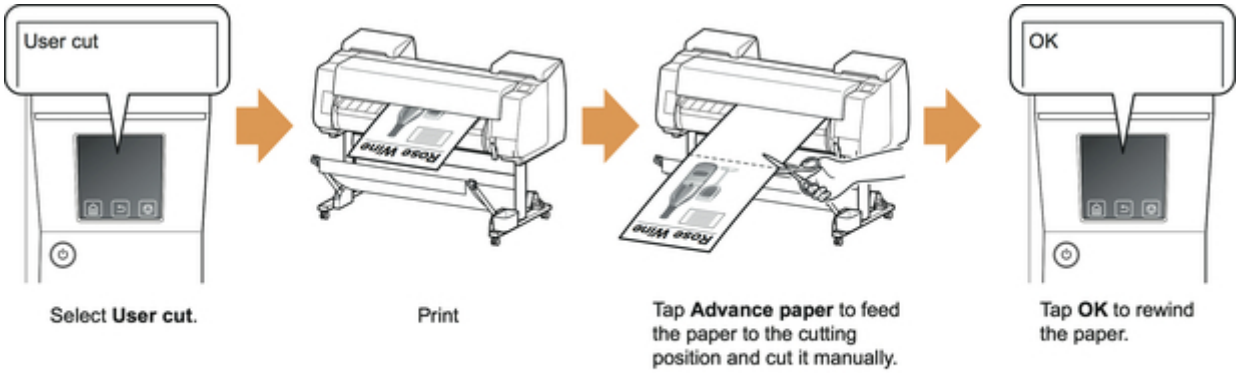

Note

- Once the following step has been performed, the procedure can be started from step 8 the next time.
  - Printing the second and subsequent times
  - Printing after replacing with the same type of paper

1. Tap paper settings display area on Home screen of touch screen.

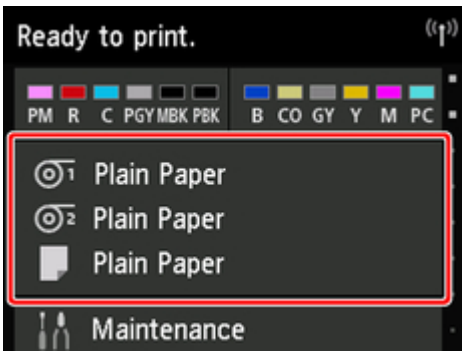

Note

- If the Home screen does not appear, tap the **Home** button.

2. Tap paper feed slot where roll paper for which you want to set cutting method is loaded.

3. Tap **Paper settings**.

4. Tap **Advanced**.

5. Tap **Cutting mode**.

6. Tap **User cut**.

7. When **Do you want to set to detect the leading edge of the paper?** is displayed, select **Detect (recommended)**.

8. Print the job.

   The printer stops advancing the paper after printing.

9. Tap **Advance paper**.

   Roll paper is fed to the specified cut position and then automatically stopped.

10. Cut the roll paper manually with scissors or the like.

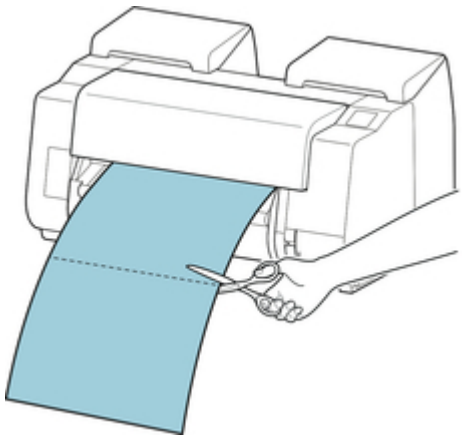

11. Tap **OK**.

    After the roll is rewound, it stops automatically.

Manual (for paper of which the leading edge rubs the printhead)

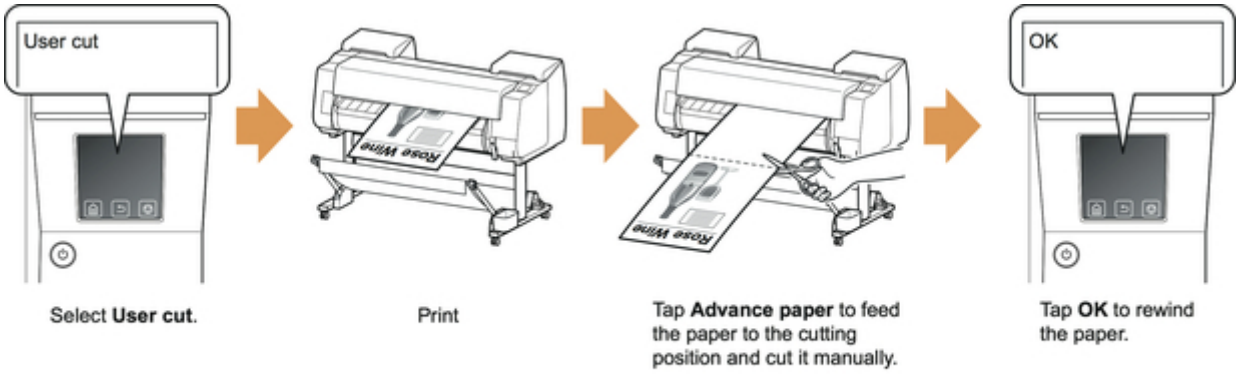

Note

- Once the following step has been performed, the procedure can be started from step 8 the next time.
  - Printing the second and subsequent times
  - Printing after replacing with the same type of paper

1. Tap paper settings display area on Home screen of touch screen.

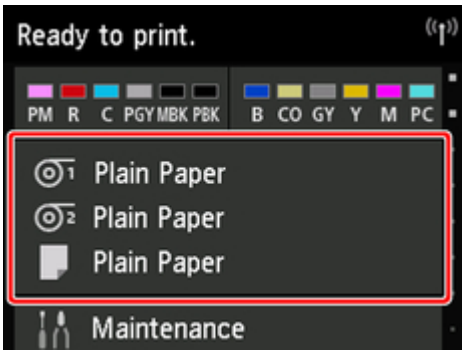

Note

- If the Home screen does not appear, tap the **Home** button.

2. Tap paper feed slot where roll paper for which you want to set cutting method is loaded.

3. Tap **Paper settings**.

4. Tap **Advanced**.

5. Tap **Cutting mode**.

6. Tap **User cut**.

7. When **Do you want to set to detect the leading edge of the paper?** is displayed, select **Do not detect**.

   Note

   - If you set the detection of paper leading edge to **Do not detect**, a margin of about 10 cm is created at the paper leading edge when printing starts.
   - When the detection of paper leading edge is set to **Do not detect**, printing will start at the position at which the roll was set for the first printing after replacing a roll. Thus, the margin of the paper leading edge will enlarge.

     (See "Loading the Upper Roll on the Printer.")

8. Tap **Back** button twice to display roll paper screen.

9. Tap **Feed/cut**.

10. Tap or touch **Advance** or **Rewind**and align paper's leading edge with position (A).

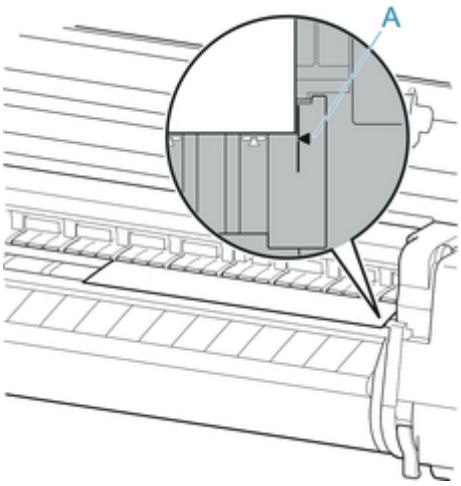

11. Print the job.

    The printer stops advancing the paper after printing.

12. Tap **Advance paper**.

    Roll paper is fed to the specified cut position and then automatically stopped.

13. Cut the roll paper manually with scissors or the like.

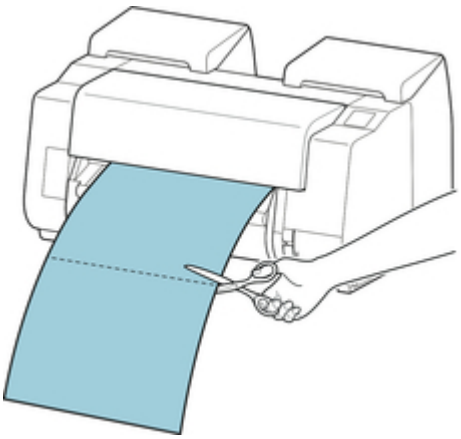

14. Tap **OK**.

    After the roll is rewound, it stops automatically.

Paper cutting (to have the roll cut at your specified position)

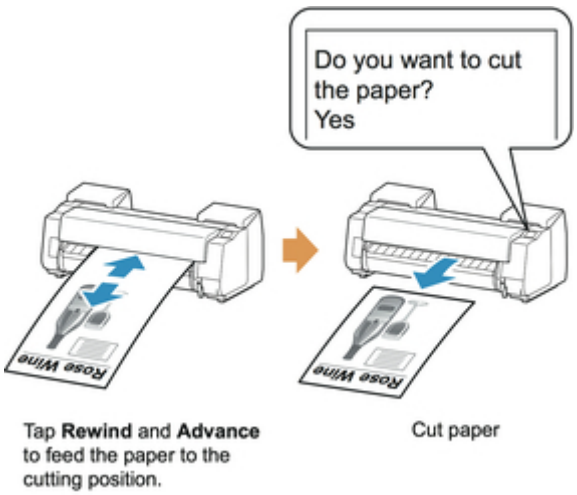

1. Tap paper settings display area on Home screen of touch screen.

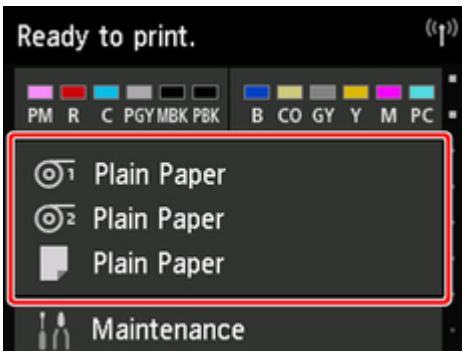

Note

- If the Home screen does not appear, tap the **Home** button.

2. Tap paper feed slot where roll paper you want to cut is loaded.

3. Tap **Feed/cut**.

4. Tap or touch **Advance** or **Rewind** to feed roll paper to desired cutting position.

5. Tap **Cut paper**.

6. Tap **Yes**.

   After the roll paper is cut, it is rewound automatically.

Cutting the Leading Edge of Roll Paper Automatically

If the leading edge of the paper is cut crooked or is not cut straight when roll paper is loaded, it will not print correctly. If this happens, you can cut the leading edge of the paper straight when loading a paper roll by using **Trim edge first** in the touch screen menu.

The following settings are available for **Trim edge first**.

- **Auto**
  If the leading edge of the paper is cut crooked and is not cut straight when loading roll paper, cut the leading edge straight and eject the fragment of paper to prevent printing on the platen and soiling the printer.

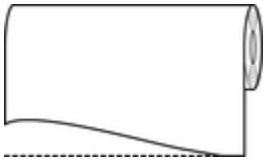

- **Auto (default length)**
  The amount to cut from the leading edge of the paper varies depending on the media type and is cut to a prescribed length. For the leading edge precut length, see "Paper Information List".

- **Auto (specified length)**
  Specify the amount to cut from the leading edge of paper on the touch screen. The amount to cut from the leading edge can be specified in the range of lengths that appear on the touch screen. The range of lengths differs according to the media type.

  Note

  - The amount to cut from the leading edge of paper cannot be set shorter than the length that appears on the touch screen.

- **Manual**
  The amount to cut from the leading edge of paper can be adjusted by using the touch screen.

  To cut the paper after adjusting, tap **Cut paper** and **Yes**.

  After cutting the paper, tap **Complete paper loading**.

  Note

  - If you do not tap **Complete paper loading** after cutting the paper, you cannot print the next job.

- **OFF**
  The edge is not cut and scraps are not removed.

Follow these steps to change the **Trim edge first** setting.

1. Tap paper settings display area on Home screen of touch screen.

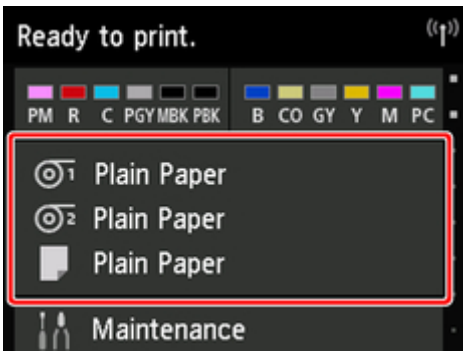

Note

- If the Home screen does not appear, tap the **Home** button.

2. Tap ⊙1 or ⊙2.

3. Tap **Paper settings**.

4. Tap **Advanced**.

5. Tap **Trim edge first**.

6. Tap desired **Trim edge first** settings.

   This setting takes effect the next time you load a roll.

Reducing Dust from Cutting Rolls

If the paper tends to generate dust when cut, such as with Backlit Film, you can reduce flying dust by setting **Cut-dust reduction** to **ON** from the touch screen menu, which will coat the leading and trailing edges of the printed document with ink. As a result, you can reduce problems with the print head. You can set **Cut-dust reduction** according to the media type.

Important

- Do not set **Cut-dust reduction** to **ON** for paper that wrinkles easily, such as Plain Paper or lightweight paper. If not cut properly, the paper may jam.
- Borderless printing is not available when **Cut-dust reduction** is set to **ON**. When performing borderless printing, set **Cut-dust reduction** to **OFF**.

Follow these steps to set **Cut-dust reduction** to **ON**.

1. Tap paper settings display area on Home screen of touch screen.

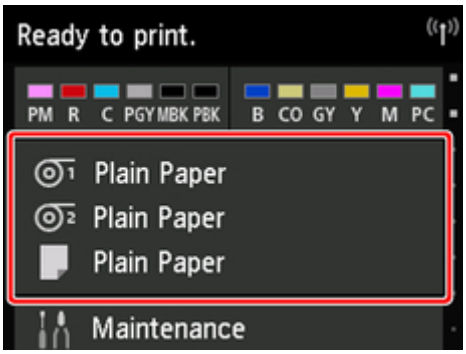

Note

- If the Home screen does not appear, tap the **Home** button.

2. Tap or area.

3. Tap **Paper settings**.

4. Tap **Advanced**.

5. Tap **Cut-dust reduction**.

6. Tap **ON**.

Automatically Switch Rolls

By using the optional roll unit as a roll paper feed device, you can load an upper roll (Roll 1 on printer) and a lower roll (Roll 2 on the roll unit), and print on while automatically changing between Roll 1 and Roll 2 depending on the print job.

For details on how to switch between Roll 1 and Roll 2, see "How to Switch Paper Rolls" (Windows) or "How to Switch Paper Rolls" (Mac OS).

Important

- If **Paper retention setting** is set to **Release**, automatic switching of roll paper cannot be used.

Handling sheets

- Loading Sheets in the Printer
- Changing the Type of Paper
- Printing From a Desired Starting Point
- Removing Sheets
- Clearing a Jammed Sheet

Loading Sheets in the Printer

Follow these steps to load sheets in the printer.

Important

- Printing on sheets is supported only when using the Stand. However, paper that is up to 16.5 inches (420 mm) in length can also be loaded even without using a Stand.
- Paper that is wrinkled or warped may jam. If necessary, straighten the paper and reload it.
- Load the paper straight. Loading paper askew will cause an error. (See "1317.")

Note

- Before loading cut sheets, check whether or not the inside of the top cover or the output guide is soiled. If these areas are dirty, we recommend cleaning them in advance. (See "Cleaning Inside the Top Cover.").
- Store unused paper in the original package, away from high temperature, humidity, and direct sunlight.

1. Select sheets as the paper source.

   - If a print job was received
     Sheets are automatically selected, and the media type and size specified by the print job are shown on the touch screen.

     Tap **OK** and **Load paper.**.

   - If no print job was received
     1. Tap paper settings display area on touch screen.

     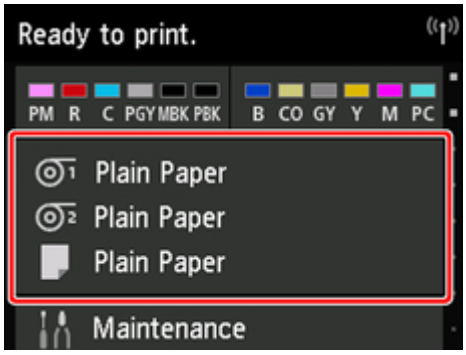

     Note

     - If the Home screen does not appear, tap the **Home** button.

     2. Tap area.
     3. Tap **Load paper.** or **Replace paper**.

   Note

   - If any paper has been advanced that will not be used, a message is shown requesting you to remove it.

Follow the instructions on the screen to remove the paper, and redo the operation.

2. Open top cover and lift release lever.

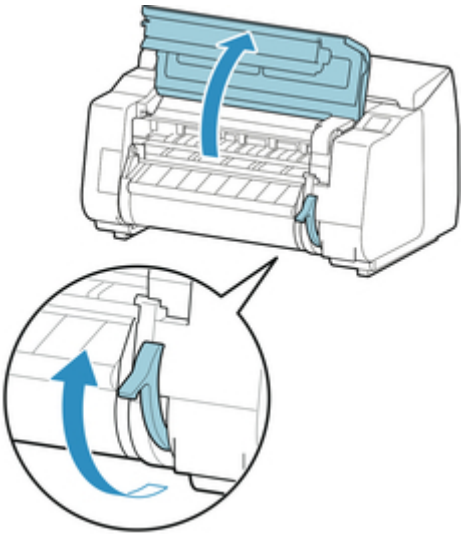

Important

- Do not touch Linear Scale (A), carriage shaft (B), or Ink Tube Stabilizer (C). Touching these parts may damage them.

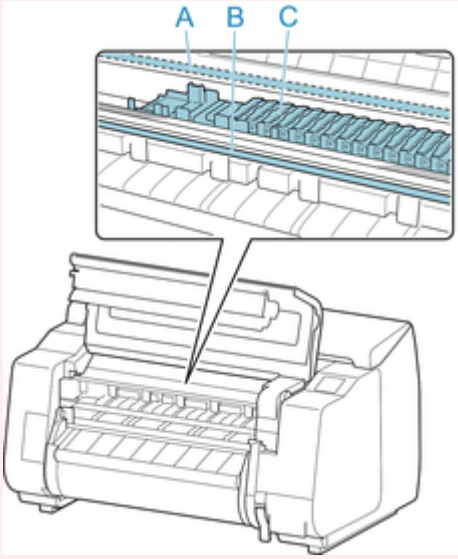

3. Place cut sheet with the print side up, insert in portrait orientation between platen (A) and paper retainer (B), and align paper's far edge using the following steps.
   1. Load while aligning with right side paper alignment line (C).
   2. Align far edge of inserted sheet with leading edge of paper alignment line (D) as shown.

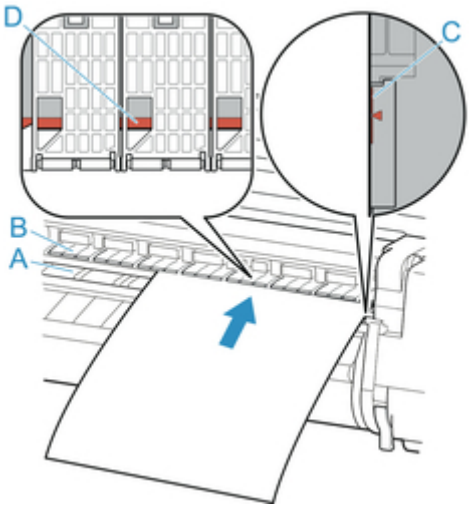

When you insert the sheet, it will adhere automatically to the surface of the platen.

Important

- Load the sheet so that it is parallel to the right paper alignment line (C). Loading paper askew will cause an error.
- Warped paper may rub against the print head. Straighten paper if it is warped before loading.

Note

- You can also align the cut sheet based on its near edge. In this case, load the cut sheet aligning its near edge with marks (A) on the platen and the right edge with the right-side paper alignment line (B).

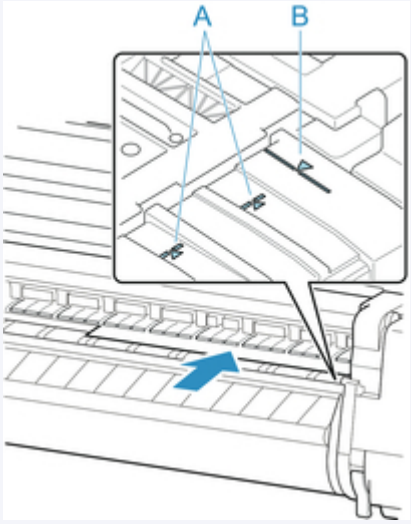

- You can adjust the vacuum strength holding the paper against the platen when the release lever is up. If it is difficult to load the paper, tap **Suction** on the touch screen and adjust the vacuum strength. You can adjust the vacuum strength to 5 levels.

  However, even if you increase the suction, it may not be sufficient to hold some types of paper against the platen well. In this case, use your hand to load the paper.
- Sheets are held in place by suction through holes on the platen. Although the suction may produce a noise when paper is loaded in some positions, it does not indicate a problem. If the

noise is distracting, try moving the paper over slightly to the left or right (up to 0.039 in / 1 mm) while keeping it parallel to the paper alignment line.

- The suction remains on for about 30 seconds during loading. If you cannot finish loading a sheet during this time, pull the sheet away and reinsert it to start the suction again.

4. Lower release lever and close top cover.

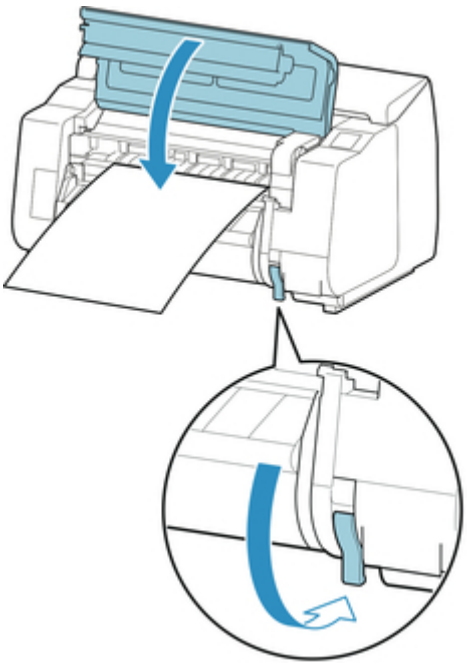

- If a print job was received
  Tap **OK** to feed the paper and begin printing.
- If no print job was received
  A menu for selecting the media type appears.

  Select the media type loaded and tap **OK**.

  The printer now starts feeding the paper.

Note

- For details on media types that you can select, see "Paper Information List."

Printing From a Desired Starting Point

Print on sheets from a desired starting point as follows.

Setting **Detect paper width** to **Disable**

1. Tap paper settings display area on Home screen of touch screen.

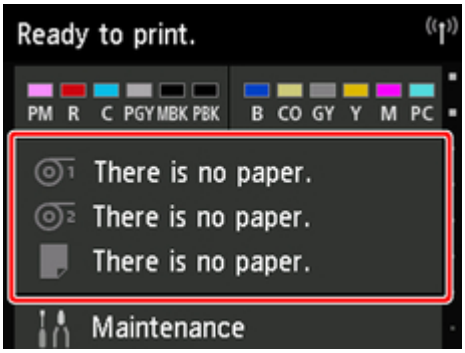

Note

- If the Home screen does not appear, tap the **Home** button.

2. Tap area.

3. Tap **Paper settings**.

4. Tap **Advanced**.

5. Select **Detect paper width** and tap **Disable**.

Load paper in the desired position to start printing from

Follow these instructions to load paper at the desired starting position for printing when **Detect paper width** is set to **Disable**.

1. If you did not send a print job in advance, a menu for selection of the type of paper is displayed.

   Tap media type loaded.

   Note

   - If a print job was received before the paper was fed, the media type and size specified by the job are shown on the touch screen.

     Go to step 2.

2. When "**[Detect paper width] is disabled. Do you want to keep it disabled and continue?**" appears on touch screen, tap **Keep it disabled and continue**.

3. Open top cover and check position where paper is loaded.

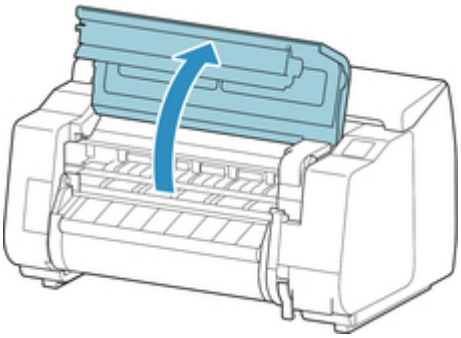

To start printing from the current position, close the top cover.

To reposition the paper, lift the release lever.

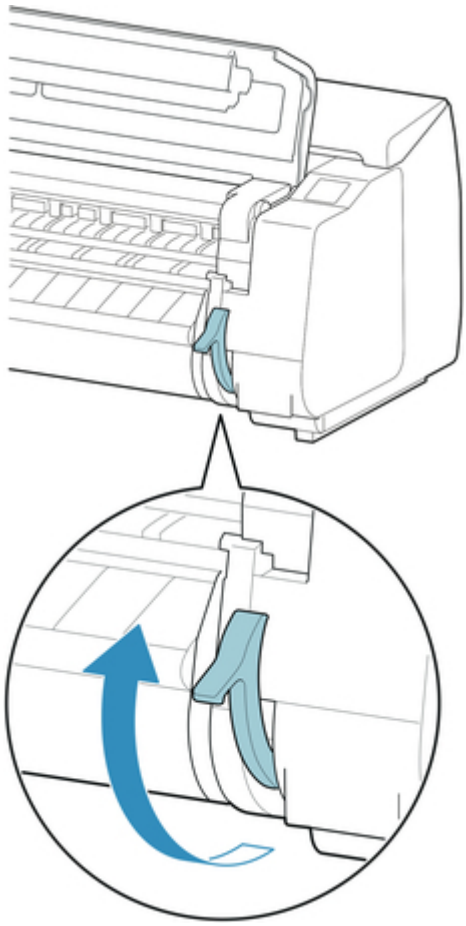

4. Load paper keeping right edge of paper aligned with extended line of paper alignment line (A) on right side of printer and position from which to start printing aligned with groove (B) at far end of platen.

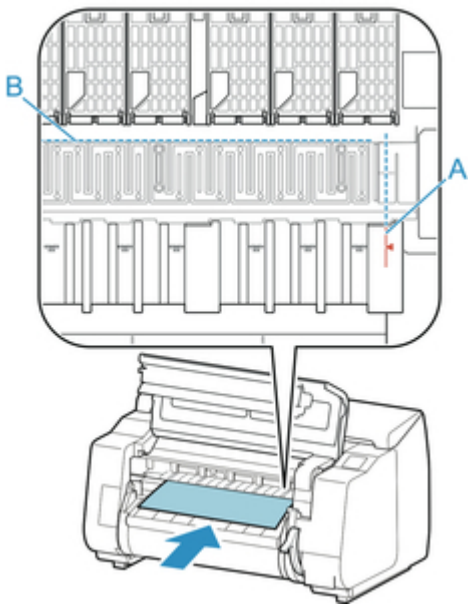

5. Lower release lever and close top cover.

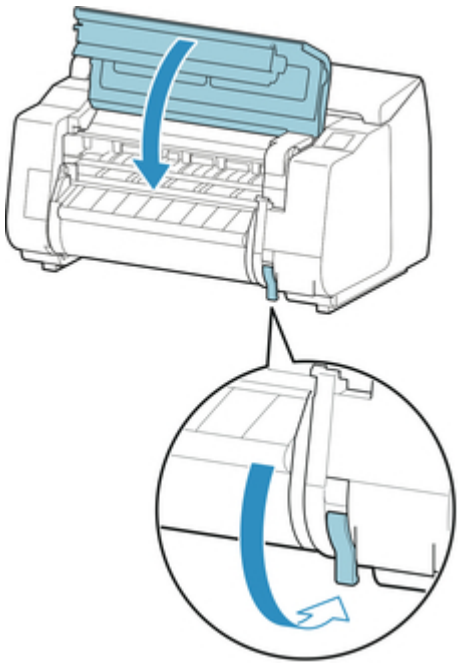

6. When screen for selecting paper size appears, select size of paper loaded.

Removing Sheets

Remove sheets from the printer as follows.

1. Tap paper settings display area on Home screen of touch screen.

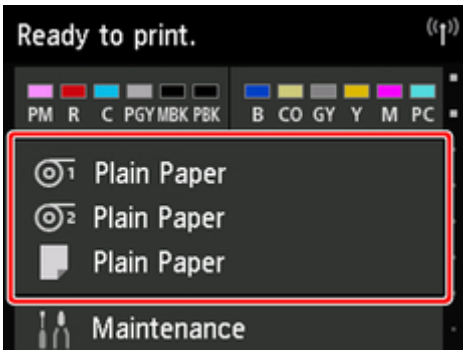

Note

- If the Home screen does not appear, tap the **Home** button.

2. Tap area.

3. Tap **Remove paper**.

4. Check touch screen message and tap **Yes**.

5. When instructions for removing sheet appear on touch screen, lift release lever while holding sheet, and remove sheet.

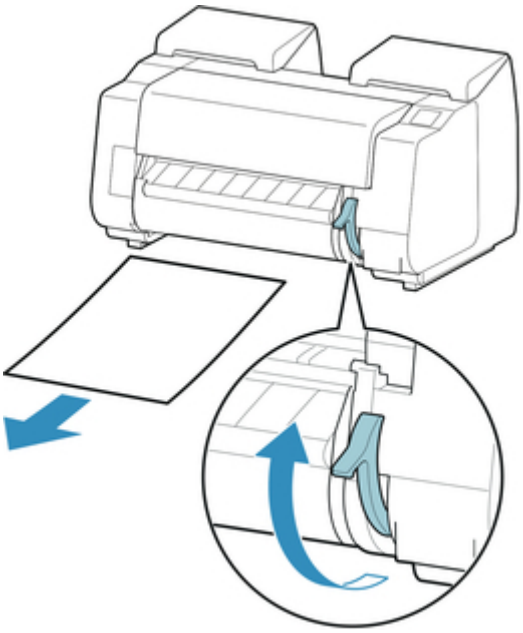

6. Lower release lever.

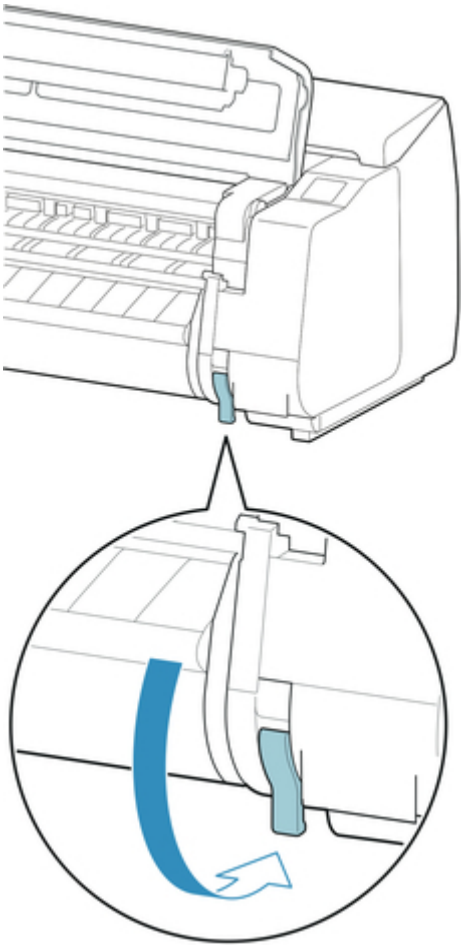

Basket

- Parts of the Basket
- Using the Basket
- Example Basket Configurations
- Storing the Basket

Parts of the Basket

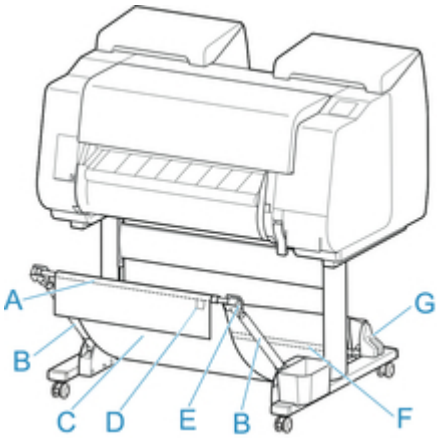

A. Basket Rod (tag side)
Secures the cloth basket to the tips of the basket arm.

B. Basket Arm
Retains the basket rod (tag side).

By changing the length and the angle, you can make the basket suitable for various conditions.

When not using the basket, you can lower it and store alongside of the stand. (See "Storing the Basket.")

C. Basket
A cloth tray that catches ejected documents.

D. White Tag
Marks indicating basket attachment orientation.

E. Basket Rewind Button
Press this button when rewinding the basket after it has been wound on the basket rod (tag side).

F. Basket Rod (cord side)
Secures the cloth basket on the rod holder.

G. Rod Holder
Retains the basket rod (cord side).

For instructions on using the basket, see "Using the Basket."

Using the Basket

By changing the following four items for the basket, which is a part of the optional Stand, you can use the basket in various ways to suit your application.

- Length of basket arm
- Tilt of basket arm
- Attachment position of basket
- Length of basket

This section describes how to change the basket.

For specific examples of basket use, see "Example Basket Configurations."

Important

- When changing the position of the basket, first return the basket to a unwound state while pressing the basket rewind button on the right end of the basket rod (tag side), and then make the change.
- If the basket rod (tag side) has come off the basket arm, attach it by inserting the projections on both ends of the basket rod (tag side) into oval holes on the tip of the basket arm.
- When moving the printer, remove the basket.
- Do not apply excessive force to the basket. Doing so may damage the basket.
- If the cloth part of the basket becomes dirty, wipe off the dirt without washing. Washing it may affect the performance of the basket.

Changing Length of basket arm

You can change the length of the basket arm in two steps.

To lengthen, expand the left/right basket arm in the direction of the arrow.

To shorten, contract the left/right basket arm in the opposite direction of the arrow.

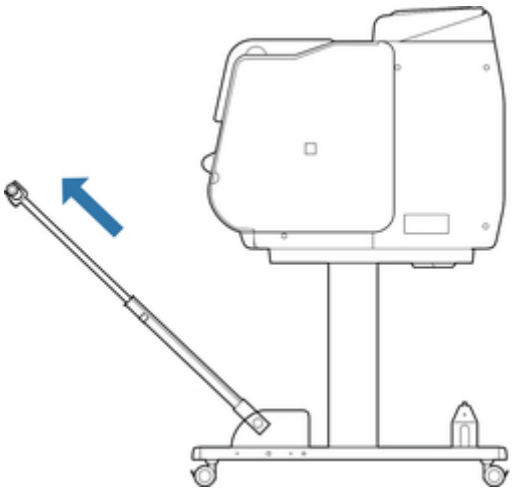

Important

- When lengthening the basket arm, first return the basket to an unwound state while pressing the basket rewind button on the right edge of the basket rod (tag side), and then make the change.

Changing Tilt of basket arm

You can change the tilt of the basket arm in three steps.

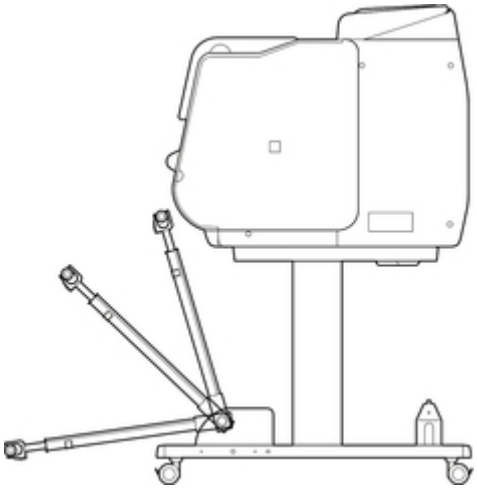

Important

- If you are changing the angle of the basket arm, make sure the thick part of the basket arm is pulled out as far as possible.
- When changing the angle of the basket arm, hold the thick part of the left/right basket arm, and adjust them.

Changing Attachment Position of basket

You can attach the basket rod (cord side) to the stand's rod holder or the front of the printer.

To attach, hang both sides of the basket rod (cord side) on the paired attachment locations shown in the illustration.

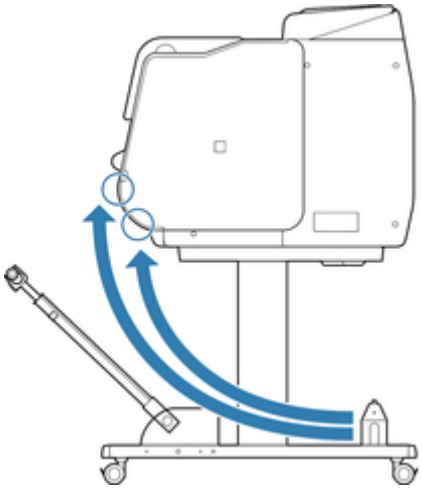

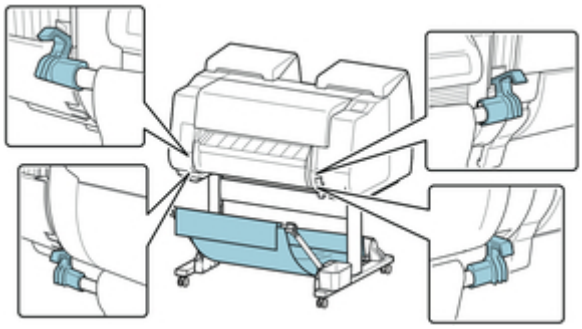

Important

- When attaching the basket rod (cord side) to the front of the printer, make sure both ends of the rod (A) are securely hooked onto the attachment parts.

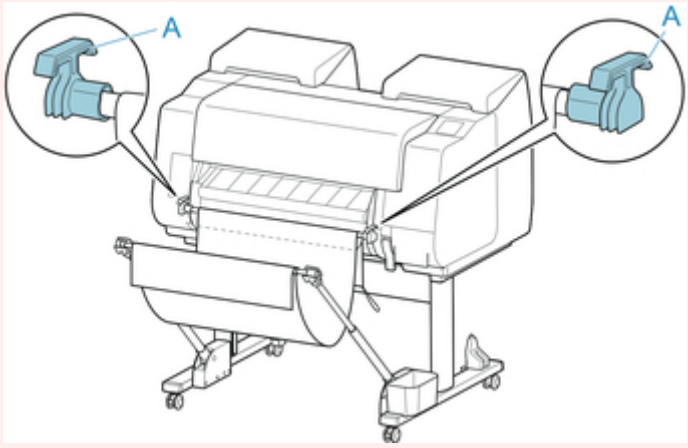

Changing Length of basket

You can adjust the basket length by rotating the basket rod (tag side).

To shorten, rotate the basket rod (tag side) in the direction of the arrow to wind the basket.

To lengthen, rotate the basket rod (tag side) in the opposite direction of the arrow while pressing the basket rewind button (A) on the right end of the basket rod (tag side). You can return the wound basket to its original position.

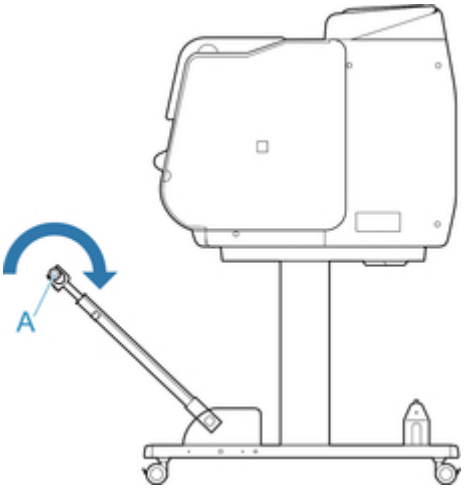

Example Basket Configurations

Various positions are possible for the basket that collects the printed materials.

In this section, we present the following five positions as examples of using the basket. Switch the position of the basket to suit to the media type and the print job.

- Using Without roll unit (Position 1)
- Using With roll unit (Position 2)
- Printing on Large-Format or Easily Damaged Paper (Position 3)
- Stacking Printed Materials (Position 4)
- Moving Printed Materials to Next Work Area Immediately (Position 5)

For instructions on switching the basket position, see "Using the Basket."

Important

- If replacing the roll paper or using the roll unit as a take-up device, you must store the basket. For instructions on storing the basket, see "Storing the Basket."
- If the printed materials collected are damaged or folded, select **Eject cut** in **Cutting mode** or use the basket in a different position. (See "Specifying the Cutting Method for Rolls.")

Note

- For details on the printer dimensions when using the basket, see "Specifications."

Using Without roll unit (Position 1)

You can use the basket in the following positions when not using the roll unit.

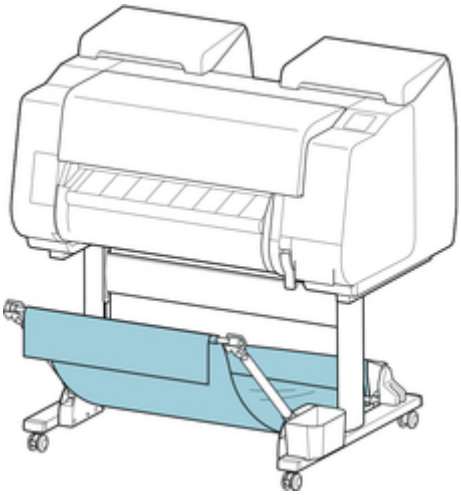

Important

- The number of sheets that can be collected in the basket is one. If printing multiple pages, print after removing each sheet.

- If using the roll unit as a feed device, we recommend using it as described in "Using With roll unit (Position 2)".
- If using the roll unit and using the Position 1 basket, the printed materials may come in contact with the roll unit depending on the paper, resulting in damage.
- If using the roll unit as a feed device and using the Position 1 basket, the ejected roll paper's cut end enters the roll unit and may cause a paper jam or affect the print quality when set to **Borderless Printing** or **Trim edge first** when loading the paper.
- Roll paper up to 62 inches (1,575 mm) in length can be collected in the basket. If printing on longer roll paper, use as described in "Printing on Large-Format or Easily Damaged Paper (Position 3)" or use with the roll unit as the take-up device.

Using With roll unit (Position 2)

You can use the basket in the following positions when using the roll unit as a feed device.

This position is useful also when rewinding printed roll paper by hand.

Move the basket rod (cord side) to the upper of the two pairs of attachment locations on the front of the printer, and extend the basket arm as far as possible at the angle shown to achieve this position.

You can adjust the basket length so that it is easy to use.

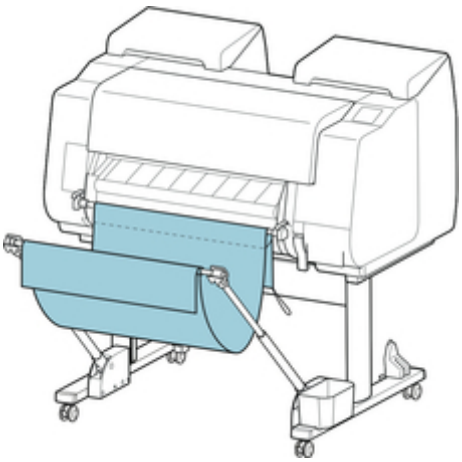

Important

- You can place up to approximately 4.41 lbs (2 kg) of printed materials in the basket. If the weight of the printed materials is greater than that, the basket may fall over.

Printing on Large-Format or Easily Damaged Paper (Position 3)

If printing on large-format or easily damaged paper, you can use the basket in the following position.

Move the basket rod (cord side) to the upper of the two pairs of attachment locations on the front of the printer, extend the basket arm as far as possible, and lower it to the angle shown. Next, adjust the length so that the basket is pulled into this position.

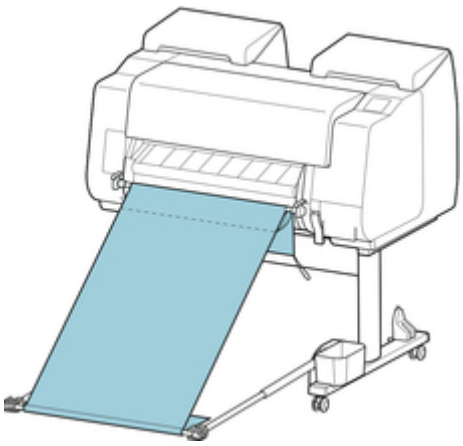

Important

- Always select **Eject cut** in **Cutting mode** when used in this position. If you select **Automatic cut**, the printed materials may be damaged. (See "Specifying the Cutting Method for Rolls.")
- Be extra careful when using paper that tends to curl or is damaged easily in this position.
- With some types of paper, the leading edge may curl or bend during ejection. In this case, straighten out the paper. Printed documents may be damaged if the paper is curled or bent.
- Depending on the paper, the paper may be caught between the output guide and the basket when being ejected. In this case, fix the paper that is caught. If the paper is caught, printed documents may be damaged.

Stacking Printed Materials (Position 4)

You can use the basket in following positions when you want to stack printed materials.

Move the basket rod (cord side) to the lower of the two pairs of attachment locations on the front of the printer, extend the basket arm as far as possible in the angle shown. Next, adjust the length so that the basket is pulled into this position.

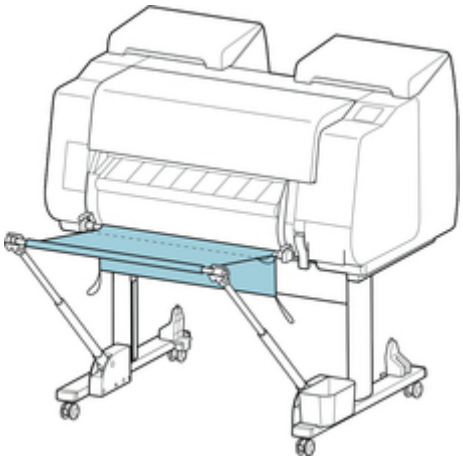

Important

- You can stack up to 10 sheets of A2 Portrait Glossy Photo Paper and 20 sheets of Heavyweight Coated Paper HG with the basket in this position. If you stack more than this, it may damage the print side of the paper or cause the basket to fall over.
- In the following cases, use as described in "Using Without roll unit (Position 1)" or "Using With roll unit (Position 2)". If printing multiple pages in these positions, print after removing each sheet.
  - Paper other than Glossy Photo Paper/Heavyweight Coated Paper HG
  - Printed materials other than A2 portrait
  - Paper curls an extreme amount due to paper characteristics and printing environment
  - If there is not much paper remaining on the roll, and the paper curls an extreme amount

Moving Printed Materials to Next Work Area Immediately (Position 5)

You can use the basket in the following position when moving the printed materials to the next work area immediately.

Move the basket rod (cord side) to the upper of the two pairs of attachment locations on the front of the printer, extend the basket arm as far as possible in the angle shown. Next, adjust the length so that the basket is pulled into this position.

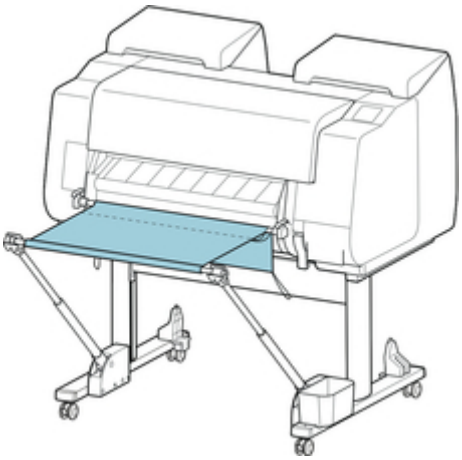

Important

- Be extra careful when using paper that tends to curl or is damaged easily in this position.
- With some types of paper, the leading edge may curl or bend during ejection. In this case, straighten out the paper. Printed documents may be damaged if the paper is curled or bent.
- Depending on the paper, the paper may be caught between the output guide and the basket when being ejected. In this case, fix the paper that is caught. If the paper is caught, printed documents may be damaged.

Storing the Basket

Store the basket in the following two positions when not in use. Select the position to suit the circumstances.

- If Changing Roll Paper or Using roll unit as Take-up Device
- Using Without basket (Only When roll unit Is Not Used)

If Changing Roll Paper or Using roll unit as Take-up Device

If replacing the roll paper or using the roll unit as a take-up device, store the basket.

You can store the basket, by attaching the basket rod (cord side) to the rod holder, lowering the basket arm until level, and then pushing as far back as possible.

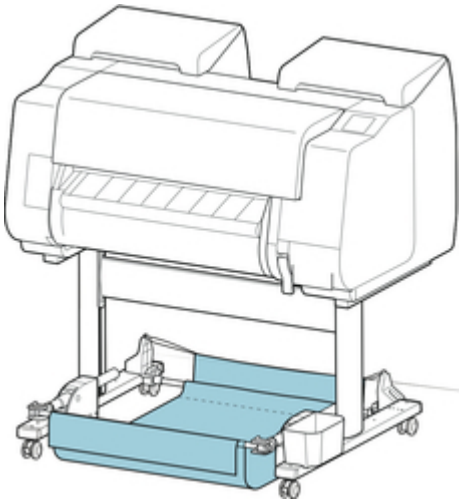

Important

- If changing the basket position, first release and rewind the basket. If it is not released and rewound, the change may not be performed smoothly, or the basket may be damaged. (See "Using the Basket.").
- If you are changing the angle of the basket arm, make sure the thick part of the basket arm is pulled out as far as possible.
- If the basket rod (tag side) has come off the basket arm, attach it by inserting the projections on both ends of the basket rod (tag side) into oval holes on the tip of the basket arm.
- Do not apply excessive force to the basket. Doing so may damage the basket.

Using Without basket (Only When roll unit Is Not Used)

If you are not using the roll unit, you can easily store the basket by holding the thick parts of the left/right basket arm in the Position 1 (See "Example Basket Configurations.") state, and moving them in the direction of the arrow.

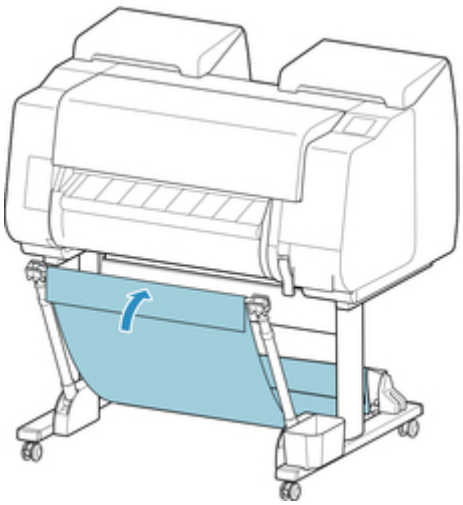

Roll Unit

- Parts of the Roll Unit
- Roll Unit
- Switching Roll Unit Modes
- Using the Roll Unit In Take-Up Mode
- Removing Printed Paper from the Roll Unit

Parts of the Roll Unit

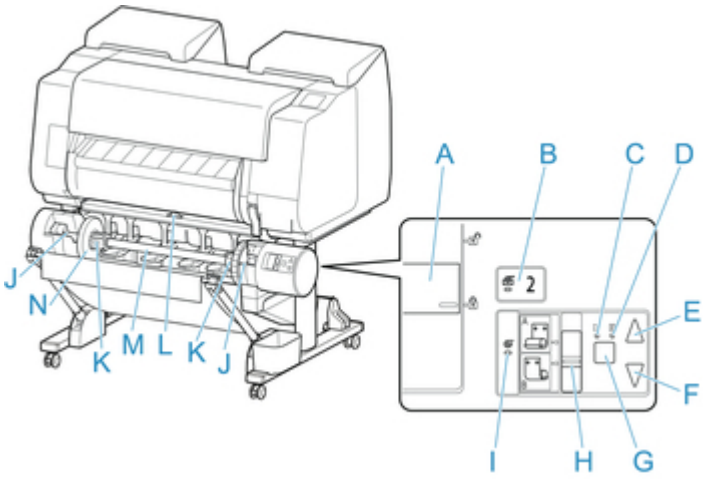

A. **Roll Holder Lock** Switch
Locks and releases the Roll Holder loaded in the roll unit.

B. **Feed Mode** Lamp
Lights up when you have selected the feed mode on the roll unit.

C. **Auto Take-up** Lamp
Lights up when the paper is being taken up.

D. **Pause** Lamp
Lights up when the paper winding is paused.

E. **Take-up** Button
You can rotate the roll unit the desired amount as long as winding is not in progress. When the winding direction is set to inward winding, the unit takes up the paper; when it is set to outward winding, the unit rewinds the paper.

F. **Rewind** Button
You can rotate the roll unit the desired amount as long as winding is not in progress. When the winding direction is set to inward winding, the unit rewinds the paper; when it is set to outward winding, the unit takes up the paper.

G. **Auto Take-up/Pause** Button
Pauses and resumes the taking up of paper.

H. **Inward/Outward Winding Changeover** Switch
Changes the winding direction when the paper is wound (inward winding and outward winding).

I. **Take-up Mode** Lamp
Lights up when you have selected the take-up mode on the roll unit.

J. Roll Holder Slot
Slide the Roll Holder into these guide grooves.

K. 3-Inch Paper Core Attachment
Attaches to the Roll Holder when you are using a roll paper with a 3-inch paper core.

L. Feed Flap Switch

Change the feed flap position depending on the roll unit mode.

M. Roll Holder

Load the roll on this holder.

N. Holder Stopper

This part secures the roll paper on the Roll Holder.

Roll Unit

The roll unit functions as a feed device that can accommodate an additional roll for a total of two rolls on the printer and as a take-up device that automatically takes up the printed roll paper.

Switch between these two functions depending on the circumstances.

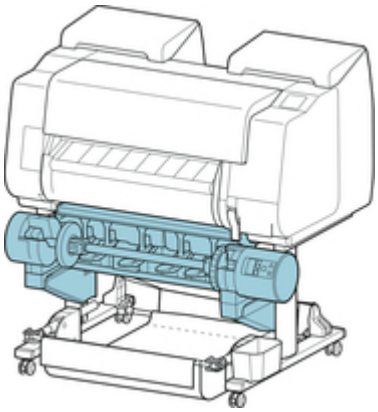

For instructions on attaching the roll unit, see the Roll Unit Setup Guide.

Switching Roll Unit Modes

Before using the roll unit, follow these steps to select the mode you want to use.

Important

- After switching the roll unit function, you must use a separate computer to apply the roll unit settings to the printer driver. For details, see "Reflect Roll Unit Settings in the Printer Driver" (Windows) or "Reflect Roll Unit Settings in the Printer Driver" (Mac OS).
- If you change the roll unit from a take-up device to a feed device, first cut the paper that has been taken up.

1. Tap paper settings display area on Home screen of touch screen.

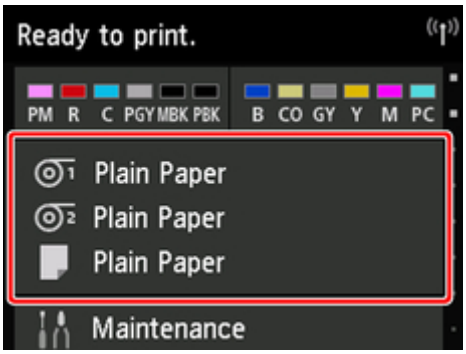

Important

- If the Home screen does not appear, tap the **Home** button.

2. Tap or area.

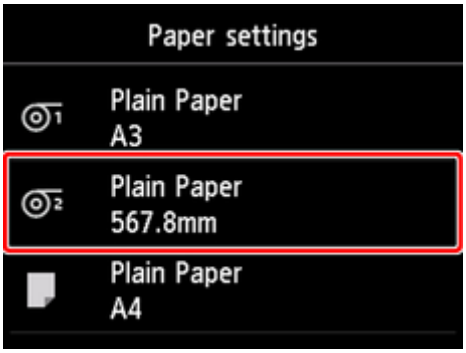

3. Change function of roll unit.

- Using as feed device
  1. Tap **Roll unit use setting**.
  2. Tap **ON** when message confirming roll unit's change to feed mode appears.

Note

- If you change the mode without cutting the roll paper with the printer's cutter, a screen confirming whether or not the paper taken up has been cut appears after you tap **ON**. If the paper has not been cut, select **No** and cut the paper that has been taken up first.

3. Load roll paper on roll unit.

   For details, see "Loading the Lower Roll on the Roll Unit (Option)."

- Using as take-up device
  1. Tap **Roll unit use setting**.
  2. Tap **ON** when message confirming roll unit's change to take-up mode appears.
  3. Tap to select paper cutting settings when using take-up mode.

     Note

     - If you selected **Do not cut**, the roll paper will not be cut after printing regardless of the **Cutting mode** setting (See "Specifying the Cutting Method for Rolls.") on the printer. Select this option when you want to print multiple pages consecutively without cutting.
     - If you selected **Use the cutting mode setting**, cutting for each page will be performed according to the **Cutting mode** setting (See "Specifying the Cutting Method for Rolls.") on the printer.
     - If you select **Use the cutting mode setting**, and **Automatic Cutting** is set in the **Cutting mode** settings (See "Specifying the Cutting Method for Rolls.")on the printer, we recommend setting **Wind up after cutting** to **Enable**. When set to **Disable**, a printed document that has been taken up is cut automatically without being pressed, resulting in fraying.
     - If roll paper is loaded from the roll unit to the printer, a screen confirming whether or not to remove the roll paper appears. If you select **Yes**, the roll paper is positioned so that it can be removed and the roll unit changes to a take-up device.

  4. Tap **Yes** or **No** when message confirming whether roll unit will be used immediately in take-up mode appears.

     If you tap **Yes**, the steps for loading the paper on the roll unit appear on the touch screen.

     If you tap **No**, the operation ends here. Load the paper on the roll unit when printing. However, in this case, you must load the paper while printing is progressing, so instructions will not appear on the touch screen.

     For details on loading paper on the roll unit set as a take-up device, see "Using the Roll Unit In Take-Up Mode."

     Note

     - If you select **Yes**, a margin of approximately 23.62 inches (600 mm) is generated at the leading edge because the roll paper advances to the roll unit before printing.

Using the Roll Unit In Take-Up Mode

Important

- For details on the roll paper compatible with winding, see "Paper Information List.".
- Before loading the roll paper to be taken up on the roll unit, set the roll unit mode to take-up device on the printer touch screen. (See "Switching Roll Unit Modes.")
- The following operation assumes that the roll holder is not installed on the roll unit and that roll paper is not loaded on the roll holder. If the roll holder is installed on the roll unit, first remove the roll holder from the roll unit, and then remove the roll paper loaded on the roll holder. (See "Removing the Lower Roll from the Roll Unit (Option).") (See "Removing Rolls From the Roll Holder.")
- Paper winding is possible until the outer diameter of the wound paper is the same as the outer diameter of the holder stopper.
- When printing on lightweight paper or without a border, the border of the paper may get wrinkled coming in contact with the roll holder, resulting in poor winding. If these problems occur when winding using a 2-inch core, remove the spacer held in place by 4 hex screws on the roll holder flange, and then wind.

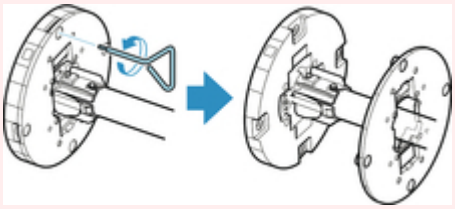

1. Store basket. (See "Storing the Basket.")

2. Push holder stopper lever (A) toward shaft to release lock, and while holding in position (B), remove holder stopper from roll holder.

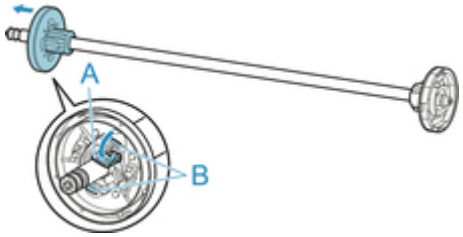

3. If taking up roll paper whose paper core has an inner diameter of 3 inches (76.2 mm), insert 3-Inch Paper Core Attachment in roll holder and holder stopper.

   Align the 3-Inch Paper Core Attachment tabs (A) with the holes on the roll holder or holder stopper (B) and insert firmly.

roll holder Side	holder stopper Side
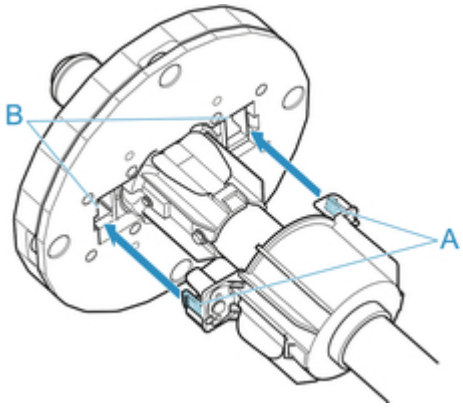	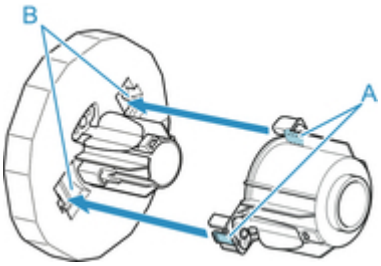

4. Insert paper core, which is for winding roll paper, into roll holder.

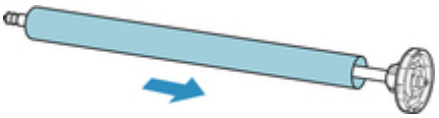

Important

- We recommend using a paper core that is wider than the paper to be wound when winding paper. If you use a narrower paper core, use with a gap between the holder stopper and the paper.
- Always use a paper core for winding that is the same thickness or is thicker than the roll paper's paper core. If you use a paper core that is thinner, it may affect take up.

5. Insert holder stopper from left into roll holder as shown, and then while holding in position (B), push firmly until holder stopper flange (A) touches roll paper. Lift holder stopper lever (C) from shaft to lock.

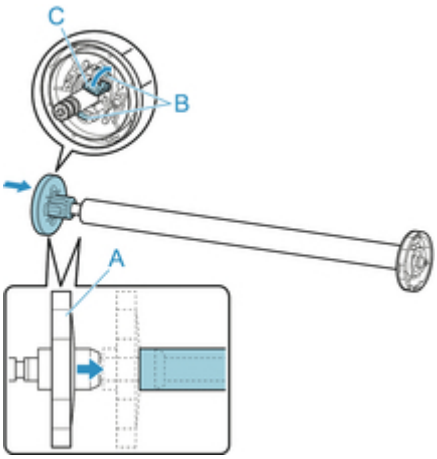

6. Change **Roll Holder Lock** switch on roll unit to release direction.

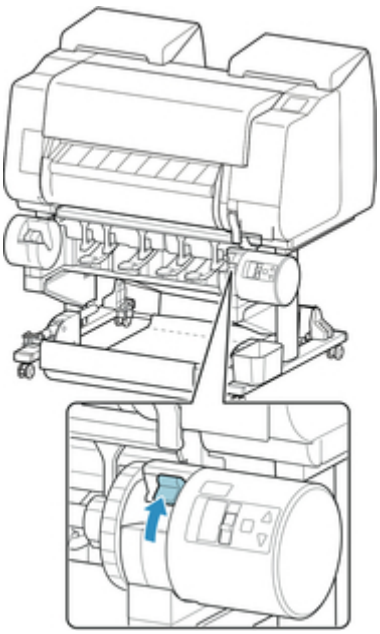

7. Hold flanges (A) so that roll holder's white gear is on left, align roll holder shaft with roll holder slot left and right guide grooves (B), and load.

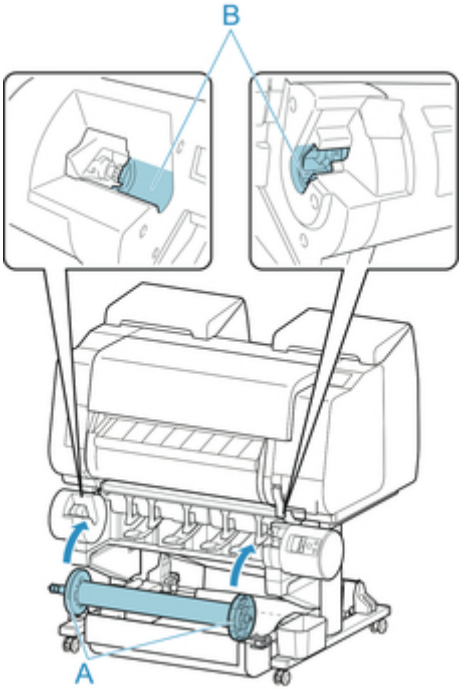

8. Change **Roll Holder Lock** switch on roll unit to lock direction.

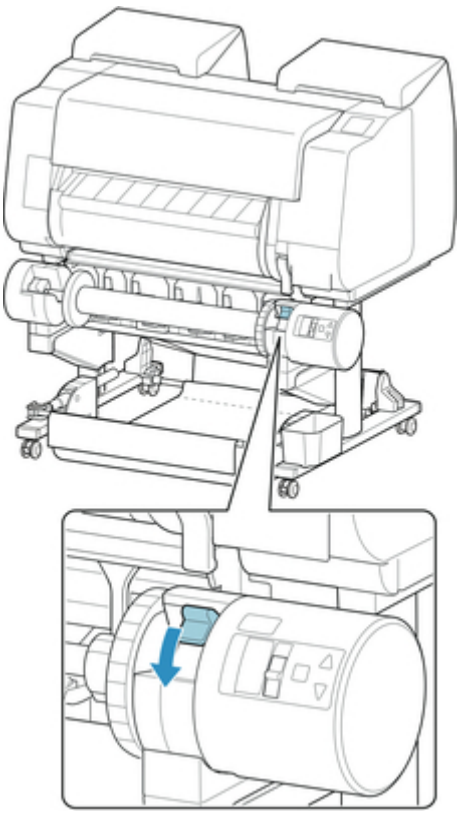

9. Change the feed flap switch on top of the roll unit so that the switch indicator (A) is aligned with ● (B) position on the take-up icon.

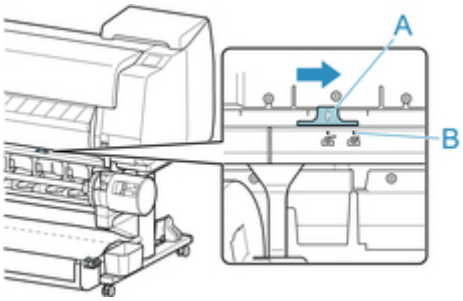

10. Change **Inward/Outward Winding Changeover** switch on roll unit to desired winding direction.

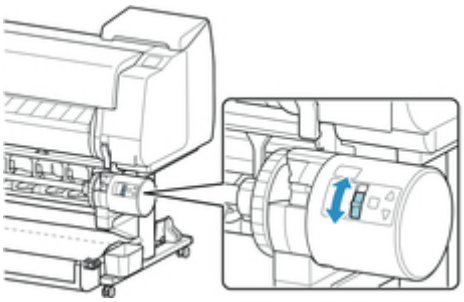

Note

- For the winding direction of the roll paper, you can select either outward winding to make the printed surface on the outside of the roll or inward winding to make the printed surface on the inside of the roll.

11. Follow these steps to secure the leading edge of the roll paper to the paper core with tape.

- If message appears on touch screen to confirm whether or not to advance paper automatically so it can be secured with tape

1. Tap **Yes**.

   The leading edge of the roll paper advances until it is close to the roll unit.

2. Hold center of leading edge of roll paper, align right edge of take-up spool paper core's right edge and tape center to paper core while pulling on roll paper evenly.

Outward Winding	Inward Winding
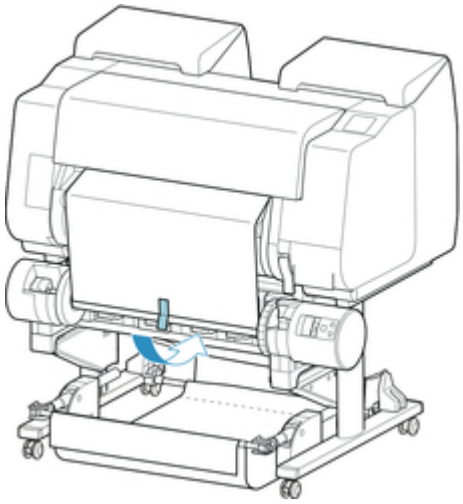	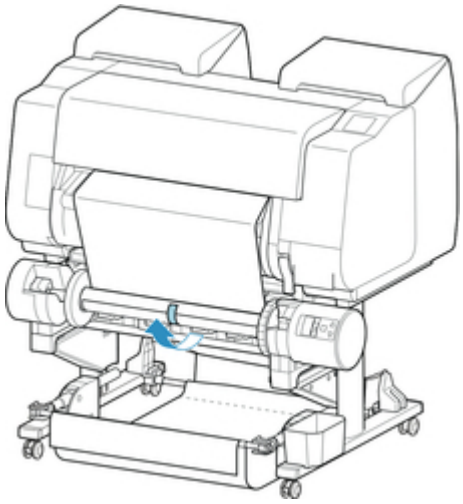

Important

- If winding with inward winding, you must pass the leading edge of the roll paper to the back of the paper core and secure with tape. If this operation is difficult, you can also remove the roll holder, push the roll paper into the back, reinstall the roll holder, and pass the roll paper to the back of the paper core.

3. Align right edge of roll paper to right edge of paper core while pulling on roll paper evenly, and secure with tape.

4. While making sure that roll paper is flat, secure left edge of roll paper to paper core with tape.

Outward Winding	Inward Winding
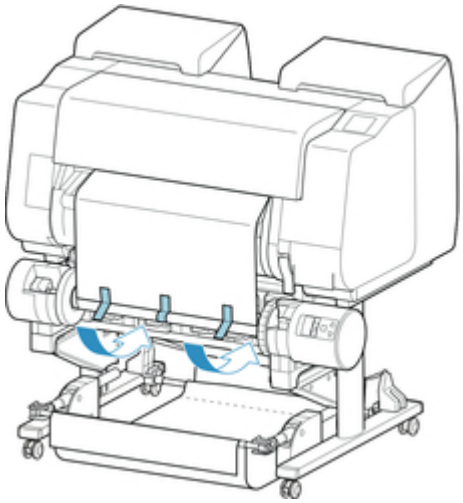	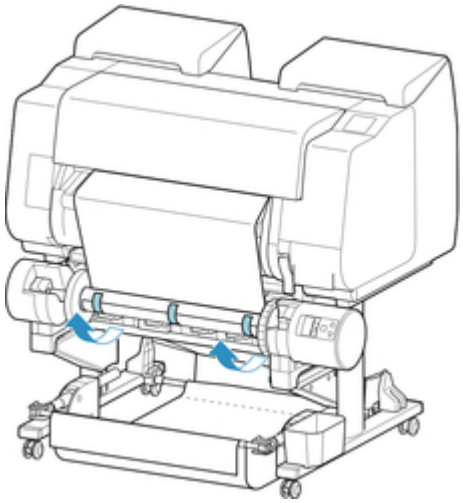

Important

- Secure the left and right edges of the roll paper with tape within 1.97 inches (50 mm) of the edges so that neither end of the roll paper lift up.
- When rewinding heavyweight paper, use strong adhesive tape to fasten it. Otherwise, a rewinding problem may result.
- If you use a paper core narrower than the paper to be wound, adjust the position of the holder stopper, so that there is a gap between the holder stopper and the paper.

5. Make sure the leading edge of the roll paper is not lifting up from the paper core, and if there are places lifting up, tape in additional places so that the paper does not lift up.
6. Push roll holder downward, check that roll holder is not lifting up, and tap **OK**.

Outward Winding	Inward Winding
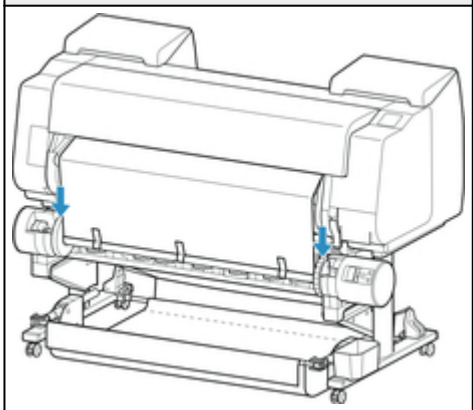	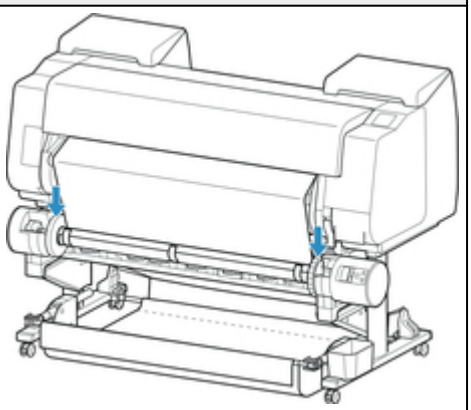

Important

- If the roll holder lifts up, it may cause an error.

7. To stabilize operations when starting taking up, advance roll paper with operation panel and wind roll paper approximately one revolution. (See "Feeding Roll Paper Manually.")
8. Push roll holder downward again, and check that roll holder is not lifting up.

The winding preparation is complete. When printing to the roll starts, the roll paper can be automatically wound.

- If **Ready to print.** appears on touch screen
  1. Manually advance roll paper (See "Feeding Roll Paper Manually.") or start printing, and wait for leading edge of roll paper to reach roll unit.
  2. Hold center of leading edge of roll paper, align right edge of take-up spool paper core's right edge and tape center to paper core while pulling on roll paper evenly.

Outward Winding	Inward Winding
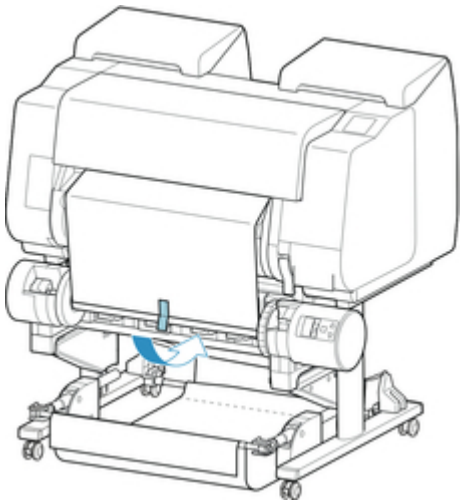	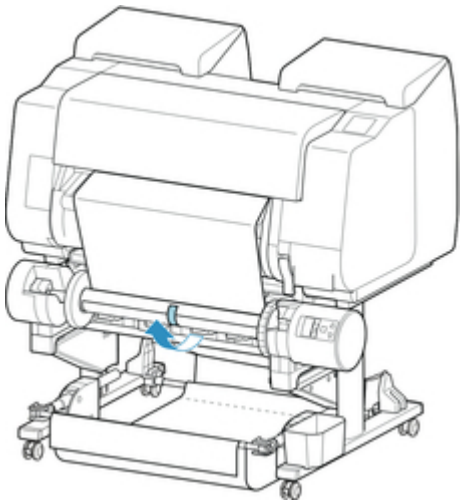

Important

- If winding with inward winding, you must pass the leading edge of the roll paper to the back of the paper core and secure with tape. If this operation is difficult, you can also remove the roll holder, push the roll paper into the back, reinstall the roll holder, and pass the roll paper to the back of the paper core.

  3. Align right edge of roll paper to right edge of paper core while pulling on roll paper evenly, and secure with tape.
  4. While making sure that roll paper is flat, secure left edge of roll paper to paper core with tape.

Outward Winding	Inward Winding
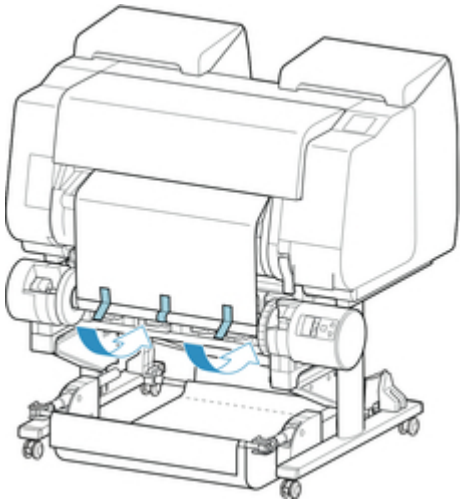	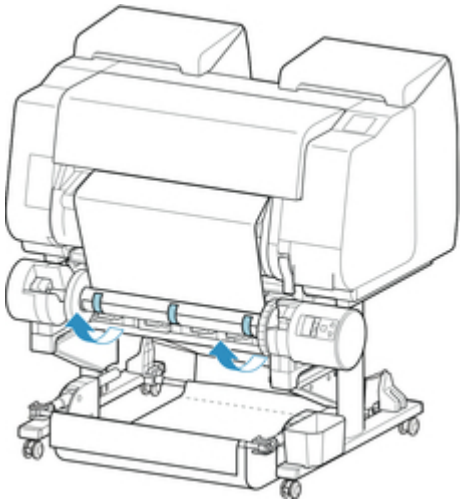

Important

- Secure the left and right edges of the roll paper with tape within 1.97 inches (50 mm) of the edges so that neither end of the roll paper lift up.
- When rewinding heavyweight paper, use strong adhesive tape to fasten it. Otherwise, a rewinding problem may result.
- If you use a paper core narrower than the paper to be wound, adjust the position of the holder stopper, so that there is a gap between the holder stopper and the paper.

5. Make sure the leading edge of the roll paper is not lifting up from the paper core, and if there are places lifting up, tape in additional places so that the paper does not lift up.
6. Push roll holder downward and check that roll holder is not lifting up.

Outward Winding	Inward Winding
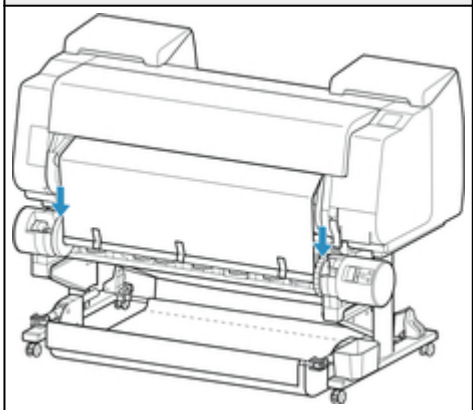	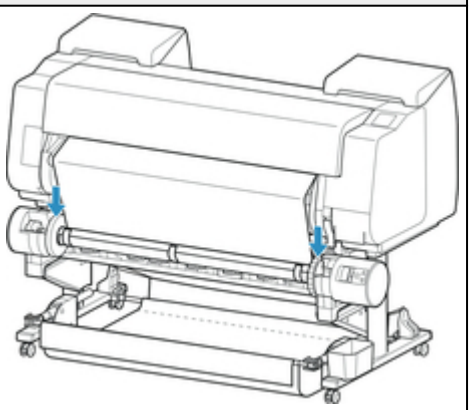

Important

- If the roll holder lifts up, it may cause an error.

7. Make sure **Inward/Outward Winding Changeover** switch on roll unit is in desired direction and press **Auto Take-up/Pause** button.

The **Pause** lamp, which has been lighted up to this point, turns off, and the **Auto Take-up** lamp lights up instead.

The winding preparation is complete. During printing, the winding starts. Before printing, the winding starts at the same time as the printing.

Important

- When winding inwardly, loosening of the wound paper can be prevented by pressing the roll paper with the arm. However, doing so may produce pressure traces on the paper. In this case, tap the roll unit area of the media information display area and set **Paper retention setting** to **Release**.

Removing Printed Paper from the Roll Unit

Note

- By tapping the paper settings display area and then area when setting **Take-up mode** and setting **Wind up after cutting** to **Enable** in advance, you can omit steps 6 and 7 below, because when the paper is cut after printing, the next paper will be automatically taken up after that. However, be careful when using easily damaged roll paper because the roll paper touches the roller when paper is cut.

1. Tap paper settings display area on Home screen of touch screen.

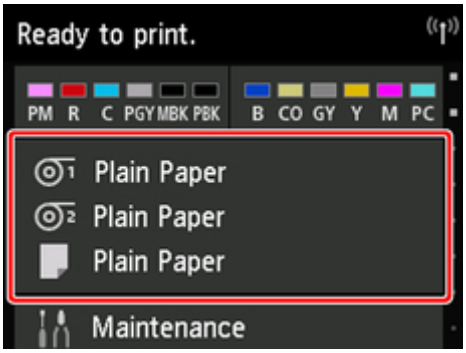

Important

- If the Home screen does not appear, tap the **Home** button.

2. Tap area.

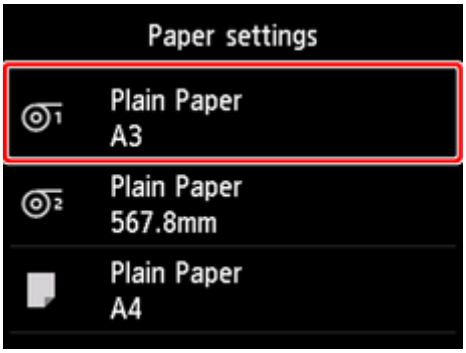

3. Tap **Feed/cut**.

4. Tap **Advance** or **Rewind** to advance roll paper a little.

   With the winding direction set to outward winding, advance the length of one circumference of the roll or more to protect the print side.

5. Tap **Cut paper**.

6. Hold printed paper between output guide and roll unit, then tap **Yes**.

   The roll is now cut.

   Important

   - When cutting the roll paper, always hold the printed paper. If cut without holding the printed paper, the paper may fall to the floor and become soiled.

7. While holding trailing edge of printed paper, press **Take-up** or **Rewind** button to wind printed paper.

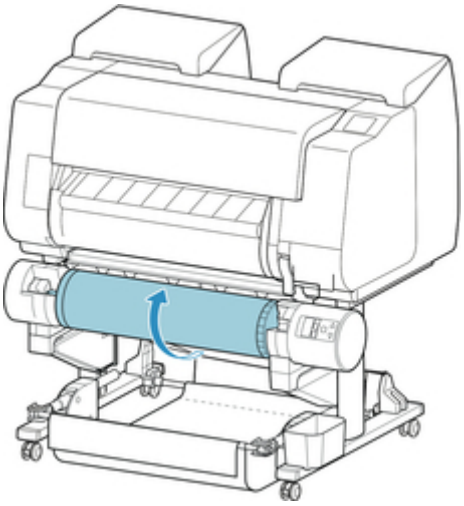

   Apply adhesive tape to the rewound paper to hold it in place, if necessary.

   Important

   - Be careful not to scratch the printed surface.

8. Change **Roll Holder Lock** switch on roll unit to release side.

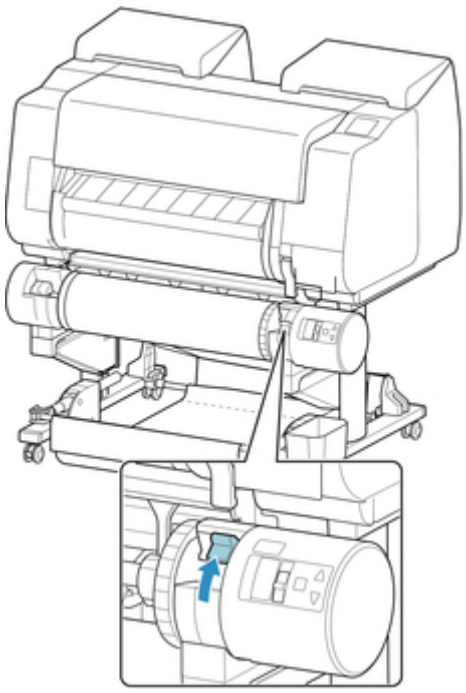

9. Hold roll holder by its flanges (A), and remove from roll unit.

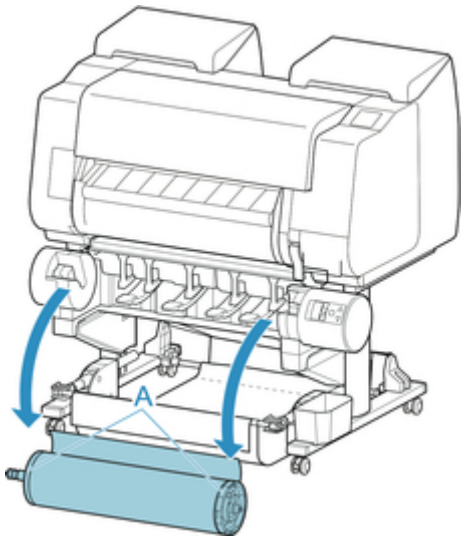

10. Push holder stopper lever (A) toward shaft to release lock, and while holding in position (B), remove holder stopper from roll holder.

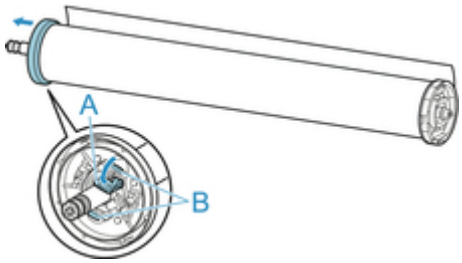

11. Remove printed material that has been taken up, from roll holder for each paper core.

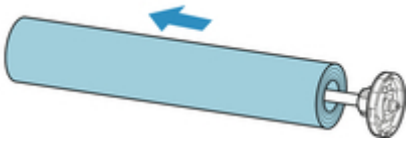

Changing Settings from Operation Panel/Web Browser

- **Operations and Touch Screen**
  - Operation Panel
  - Touch Screen
  - Checking Instructions During Printer Operations
- **Changing Settings from Operation Panel**
  - Printer Menu Operations
  - Menu Operations
  - Menu Structure
  - Changing Settings from Operation Panel
  - Setting Items on Operation Panel
  - Status Print
- **Changing Printer's Setting Using Web Browser**
  - Changing Settings Using Web Browser
  - Changeable Setting Items Using Web Browser
  - Setting Password
  - Registering Printer's Root Certificate to Web Browser
  - Setting Mail Server
  - Receiving Printer Status by E-mail

Operations and Touch Screen

- Operation Panel
- Touch Screen
- Checking Instructions During Printer Operations

Operation Panel

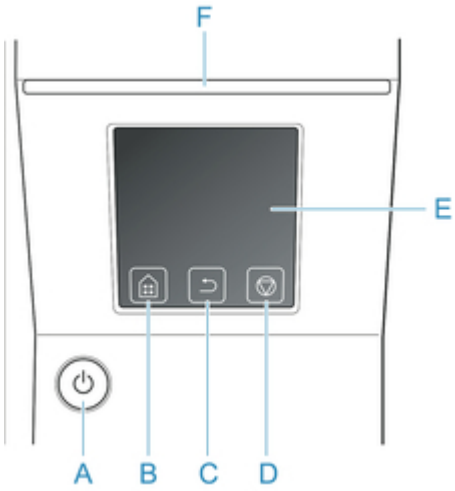

A. **ON** button/**ON** lamp
Turns the printer on and off.

➡ Turning the Printer On and Off

The **ON** lamp is lit when the printer is on or in Sleep mode.

B. **Home** button
The Home screen appears.

➡ Touch Screen

C. **Back** button
Displays the screen before the current screen.

D. **Stop** button
Cancels print jobs in progress and ends the ink drying period.

E. touch screen
Shows printer menus, as well as the printer status and messages. You can select menu items and display buttons by gently touching the screen with your fingertip.

➡ Touch Screen

F. **Status** lamp
- Flashing (white)
  During printing, the Data lamp flashes when the printer is receiving or processing print jobs. Otherwise, this lamp flashes when the print job is paused or the printer is updating the firmware.
- Lit (orange)
  A warning message is displayed.
- Flashing (orange)
  An error message is displayed.
- Off
  There are no active print jobs, warnings, or errors.

Note

- When the printer is in Sleep mode, you can touch the touch screen to recover from Sleep mode.

Touch Screen

After the printer starts up, the Home screen appears on the touch screen.

From the Home screen, you can check the printer status and select the maintenance, settings, and other menus. Flick the Home screen up and down, and select the display position.

➡Basic Touch Screen Operations

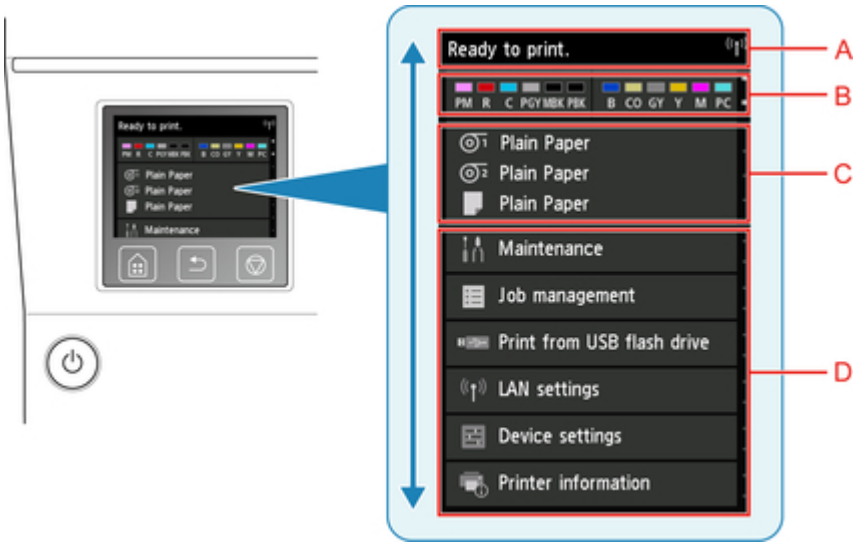

A. Printer Information Display Area

   Displays the printer status, messages, and other information. Tap this item when a message appears to view the message on the list screen and to jump to the screen with detailed information and operations.

B. Ink Display Area

   Displays the ink status. Tap this item to view the remaining amount of ink and how to replace the ink tanks.

C. Paper Setting Display Area

   Displays the media information for each feeding location. Tap this item to configure the size and type of the paper loaded.

D. Other Menu Items

   Displays the items used to perform maintenance and configure the various settings.

   ➡ Printer Menu Operations

Basic Touch Screen Operations

You can select various functions and settings by gently touching and swiping the touch screen with your fingertip.

Important

- Take the following precautions when operating the touch screen. Otherwise, the touch screen may malfunction or become damaged.

- Do not forcibly press the touch screen with your finger.
- Do not press the touch screen with an object other than your finger (such as a ballpoint pen, pencil, fingernail, or other object with a sharp tip).
- Do not operate the touch screen with wet or dirty hands.
- Do not place objects on top of the touch screen.

- Do not place a protective film over the touch screen. Removing it can damage the touch screen.

Tap

Gently touch with your fingertip and then release.

Use this when selecting an item on the screen.

Touch

Gently touch with your fingertip.

To go (or return) to a menu or list, touch the directional mark.

Flick

Drag and release your finger up, down, left, or right.

Use this to quickly scroll through a menu or list.

Drag

Move your finger up, down, left, or right while gently keeping it in contact with the touch screen.

Use this to move a menu or list while viewing it.

Notification Messages

When the ink is low or there is another notification, **New notice.** appears in the printer information display area. Tap this to display the **Notice list** screen to view messages with the newest one appearing first. Tap a message to display the message details screen to view the details and take action.

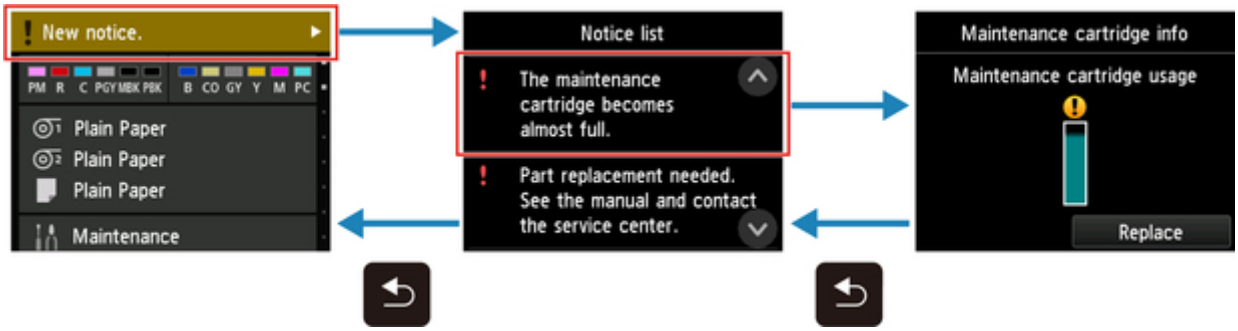

Checking Instructions During Printer Operations

You can refer to instructions on the touch screen when loading paper, replacing ink tanks, or performing other operations.

How to view instructions

Once you complete an action described in the instructions, the printer detects the action and switches to the next instruction screen.

Operation screens are switched every 3 seconds, and the sequence of operations is shown repeatedly.

For actions the printer cannot detect, tap **OK** to display the instruction screen for the next step.

Example: Ink tank replacement

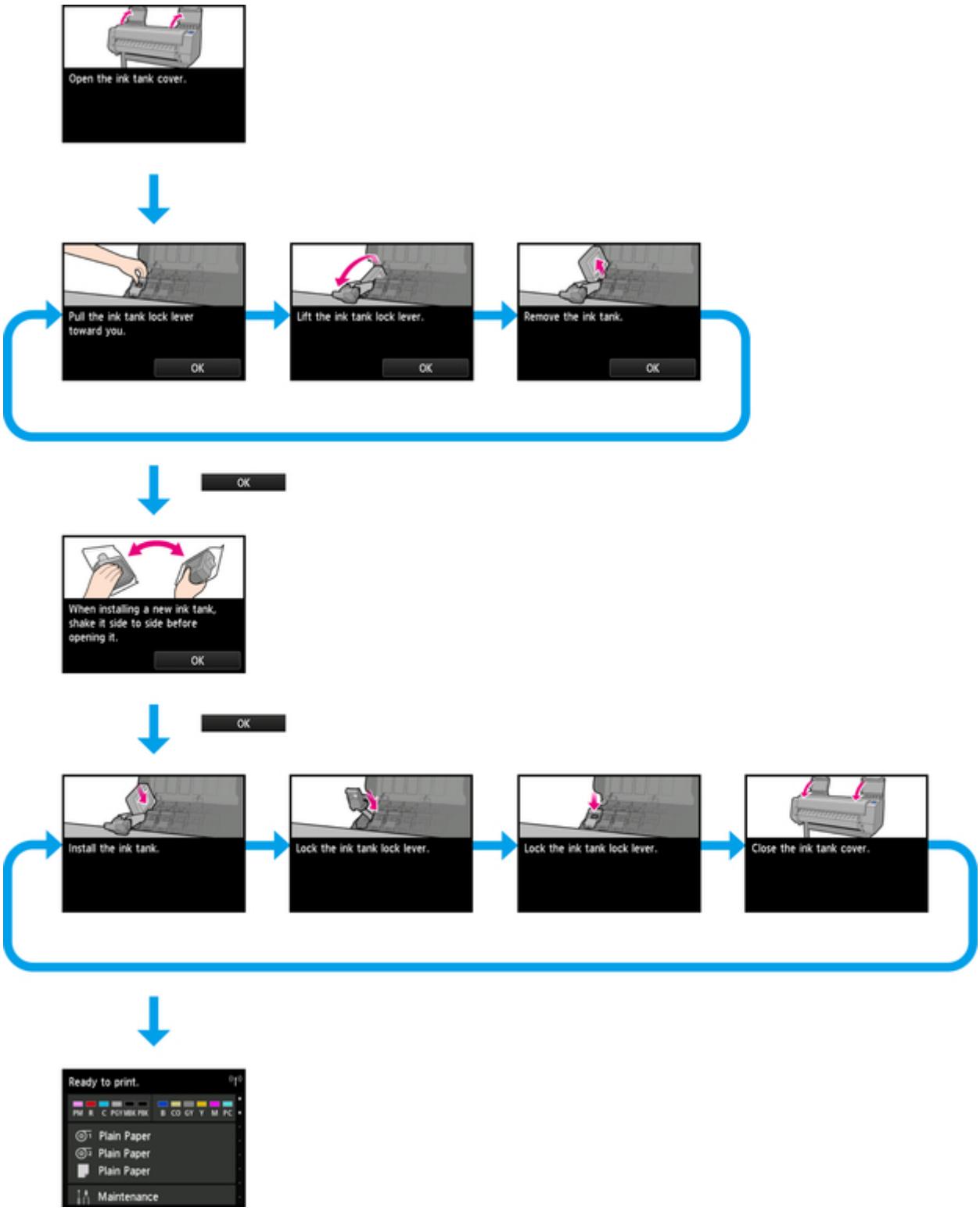
Open the ink tank cover.
Pull the ink tank lock lever toward you.
OK
Lift the ink tank lock lever.
OK
Remove the ink tank.
OK
OK
When installing a new ink tank, shake it side to side before opening it.
OK
OK
Install the ink tank.
Lock the ink tank lock lever.
Lock the ink tank lock lever.
Close the ink tank cover.
Ready to print.
Plain Paper
Plain Paper
Plain Paper
Maintenance

Changing Settings from Operation Panel

- Printer Menu Operations
- Menu Operations
- Menu Structure
- Changing Settings from Operation Panel
- Status Print

Printer Menu Operations

The printer menu is classified into regular menu items available when no print job is in progress and menu during printing items only available while printing is in progress.

Flicking HOME screen and tapping the menu displays each setting item.

The menus below are available.

1. Printer status

   Displays the printer status and LAN connection status.

2. Ink status

   Displays the ink status.

3. Paper information

   Perform paper settings. (grays-out while a print job is in progress)

4. **Maintenance**

   Perform maintenance settings. (grays-out while a print job is in progress)

5. **Job management**

   Perform job management settings.

6. **Print from USB flash drive**

   Perform print settings when you print data on a USB flash drive.

7. **LAN settings**

   Perform LAN settings. (grays-out while a print job is in progress)

8. **Device settings**

   Perform various printer settings. (grays-out while a print job is in progress)

9. **Printer information**

   Displays various printer information.

Note

- By default, menu settings apply to all print jobs. However, for settings that are also available in the printer driver, the values specified in the printer driver take priority.

Menu Operations

The operation panel features a touch screen (A) and buttons (B).

Touch icons on the touch screen's HOME screen to select menus.

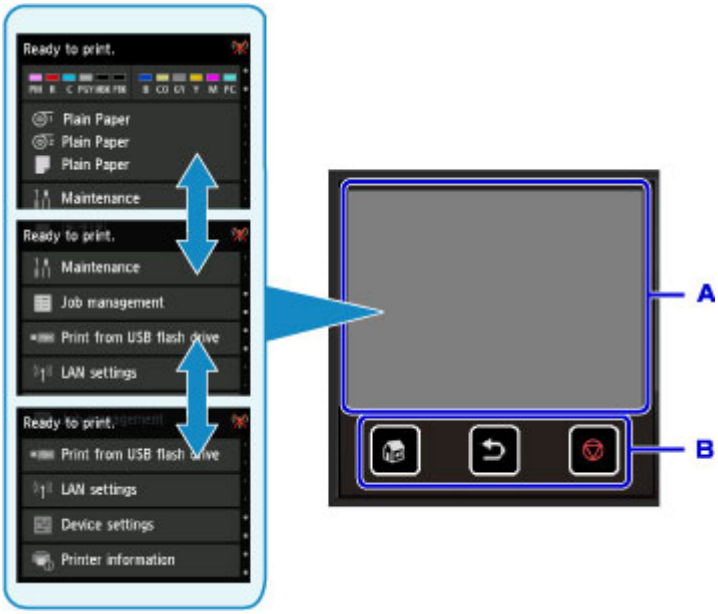

A. Touch screen

B. Buttons on the operation panel

Basic Touch Screen Operations

Tap the touch screen lightly or use other gestures to access various functions and settings.

Important

- Note the following touch screen precautions to avoid malfunction or damage to the printer.
  - Do not press hard against the touch screen.
  - Do not press the touch screen with objects other than your finger, especially sharp objects, such as pens, pencils, or nails.
  - Do not touch the touch screen if your hands are wet or dirty.
  - Do not place any objects on the touch screen.
- Do not apply a screen protector to the touch screen. Removing it may damage the touch screen.

- Tap

  Touch lightly and briefly with your fingertip.

  Tap to select an item on the screen, for example.

- Touch

  Touch with your fingertip, pressing lightly.

  Keep touching the "next" (or "back") icon to move forward or back through menus or a list continuously, for example.

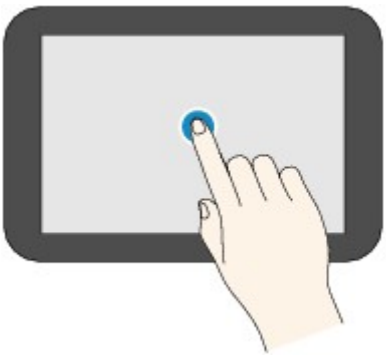

- Flick

  Flick up, down, left, or right on the screen with your finger.

  Flick to move forward or back through menus or a list, for example.

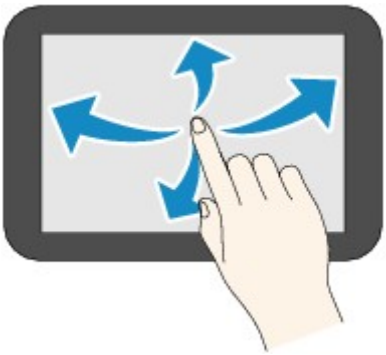

- Drag

  While lightly touching the screen, move your finger up, down, left, or right.

  Drag to move listed items or a list while viewing them, for example.

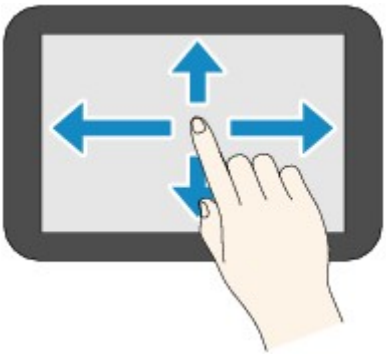

Example of Using Touch Screen

These touch screen operations are available when you print data on a USB flash drive.

Drag up or down, and then tap an item to select it.

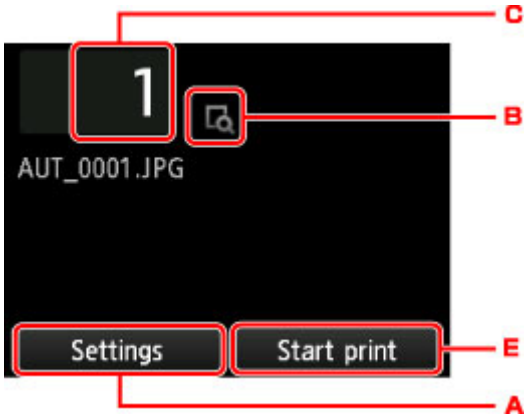

Tapping A displays the print settings menu.

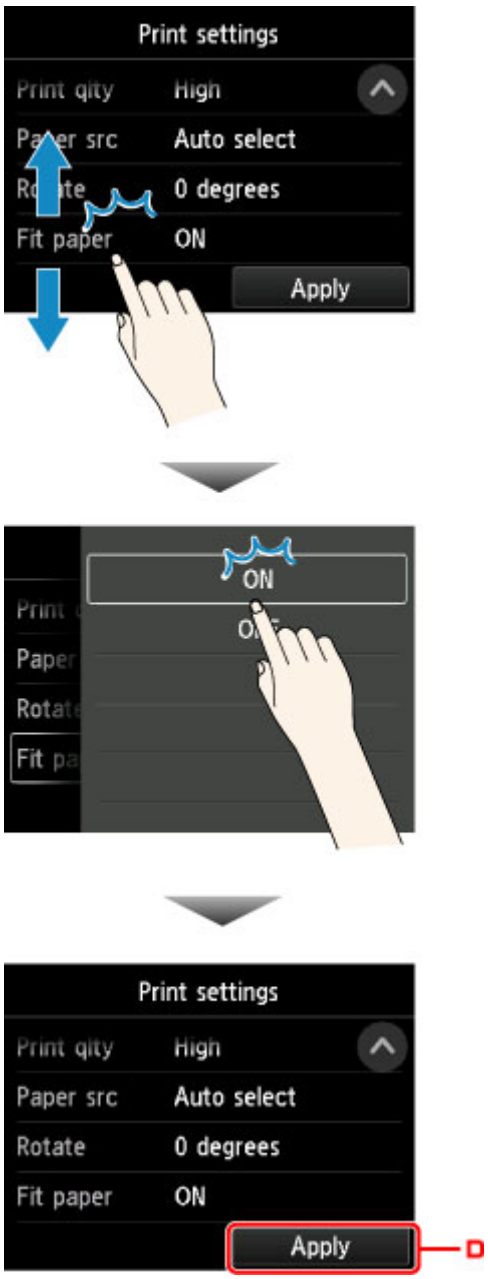

Drag up or down, and then tap an item to select it.

After the list is displayed, tap a setting to select it.

Tap D to confirm the settings.

Tap B to display the screen for selecting the number of copies.

Tap a number to specify the number of copies, and then tap **OK**.

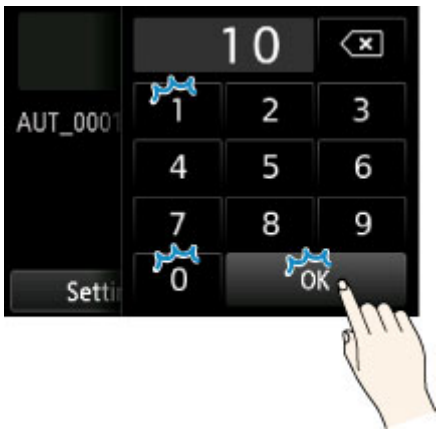

Tap C to display the preview screen.

Touch the **Back** button to return to the previous screen.

Menu Structure

- **Ink information**

Current estimated ink levels
Replace
Order ink now

- **Paper settings**

Roll paper 1		
	Replace paper	
	Feed/cut	
	Remove paper	
	Paper settings	
		Width/Length/Type/Advanced

Roll paper 2		
	Replace paper	
	Feed/cut	
	Remove paper	
	Roll unit use setting	
	Paper settings	
		Width/Length/Type/Advanced

Take-up mode		
	Roll unit use setting	
	Auto feed to take-up position	
	Skip errors during take-up	
		ON/OFF
	Wind up after cutting	
		Enable/Disable
	Paper retention setting	
		Release/Retain

- Use in take-up mode
  - Use/Do not use

- Manual
  - Replace paper
  - Remove paper
  - Paper settings
    - Page size/Type/Advanced

- **Maintenance**

- Print nozzle check pattern

- Print head cleaning
  - Cleaning
    - All colors/Pattern 1/Pattern 2/Pattern 3
  - Deep cleaning
    - All colors/Pattern 1/Pattern 2/Pattern 3
  - System cleaning
    - All colors/Pattern 1/Pattern 2/Pattern 3

- Print head alignment
  - Auto (standard)
    - Roll paper 1/Roll paper 2/Manual
  - Auto (fine)
    - Roll paper 1/Roll paper 2/Manual
  - Manual
    - Roll paper 1/Roll paper 2/Manual

- Paper feed adjustment
  - Set priority
    - Roll paper 1
      - Auto/Prioritize print quality/Prioritize length accuracy

		Roll paper 2
		Auto/Prioritize print quality/Prioritize length accuracy
		Manual
		Auto/Prioritize print quality/Prioritize length accuracy
	Adjust print quality	
		Auto/Manual
	Adjust feed length	
		Print alignment pattern
		Roll paper 1/Roll paper 2/Manual
		Change adjustment values

Color calibration		
	Auto adjust	
		Roll paper 1/Roll paper 2/Manual
	Enable/disable adjustment values	
		Enable/Disable
	Adjustment information	
		Roll paper 1/Roll paper 2/Manual
	Calibration guide setting	
		Enable/Disable
	Reset adjustment values	

Maintenance cartridge info	
	Maintenance cartridge usage
	Replace

Head replacement

Replace cutter blade unit

Platen cleaning

Prepare to transportation	

	Move indoors on the same floor
	Move indoors to a different floor
	Transport outdoors

- **Job management**

Print job		
	List of print jobs	
		Delete/Priority printing/Release hold

Saved job			
	Job box list		
		Job list	
			Delete/Start print
		Print the job list	

Job history	
	Display job history
	Print job history

Pause printing	
	Enable
	Disable

- **Print from USB flash drive**

Folder/file list	
	Number of copies
	Preview
	Settings
	Start print

- **LAN settings**

Change LAN	
	Activate wired LAN

	Activate wireless LAN
	Activate direct connect.
	Disable LAN

Wireless LAN setup		
	Cableless setup	
	Standard setup	
	WPS (Push button method)	
	Other setup	
		Advanced setup/WPS (PIN code method)

- **Device settings**

Test print	
	Print nozzle check pattern
	Status print
	Status print (administrator)
	Print LAN details
	Print setting print
	Print advanced paper settings
	Print job history
	Print menu map

Print settings			
	Print head movable width setting		
		Data width/Maximum movable width/Paper width	
	Prioritize paper size		
		Enable/Disable	
	PDF print settings		
		Print quality settings	
			Color mode
				Monochrome/Color

		Matching method		
			Perceptual (Photo)/Saturation (Poster)	
		Print quality		
			Standard/High/Highest	
		Input resolution		
			600 dpi/300 dpi	
		Paper settings		
			Paper src	
				Auto select/Roll paper (auto)/Roll paper 1/Roll paper 2/Manual
			Margin	
				3mm/5mm
			Rotate	
				0 degrees/90 degrees
			Fit paper	
				ON/OFF
		Display during process		
			Warning display	
				Enable/Disable
JPEG print settings				
	Print quality settings			
		Color mode		
			Monochrome/Color	
		Matching method		
			Perceptual (Photo)/Saturation (Poster)	
		Print quality		
			Standard/High/Highest	
		Input resolution		
			600 dpi/300 dpi	

		Paper settings		
			Paper src	
				Auto select/Roll paper (auto)/Roll paper 1/Roll paper 2/Manual
			Margin	
				3mm/5mm
			Rotate	
				0 degrees/90 degrees
			Fit paper	
				ON/OFF
Print from USB flash settings				
	Color mode			
		Monochrome/Color		
	Print qlty			
		Standard/High/Highest		
	Paper src			
		Auto select/Roll paper (auto)/Roll paper 1/Roll paper 2/Manual		
	Rotate			
		0 degrees/90 degrees		
	Fit paper			
		ON/OFF		
Print setting print				

LAN settings	
Change LAN	
	Activate wired LAN
	Activate wireless LAN
	Activate direct connect.
	Disable LAN
Wireless LAN setup	

- Cableless setup
- Standard setup
- WPS (Push button method)
- Other setup
  - Advanced setup/WPS (PIN code method)

Confirm LAN settings

- LAN setting list
- WLAN setting list
- Direct connection setting list
- Print LAN details

Other settings

- Set printer name
- TCP/IP settings
  - IPv4
    - IP address/DNS server/Proxy server
  - IPv6
    - Enable/disable IPv6/IPsec settings/Use DHCPv6/Manual address/DNS server
- WSD setting
  - Enable/disable WSD
    - Enable/Disable
  - Optimize inbound WSD
    - Enable/Disable
  - Timeout setting
    - 20 minutes/15 minutes/10 minutes/5 minutes/1 minute
- Bonjour settings
  - Enable/disable Bonjour
    - Enable/Disable
  - Service name
- IEEE802.1X settings

- Authentication
  - Do not use/TLS/TTLS/PEAP
- EAP-TTLS internal auth. method
  - MSCHAPv2/PAP
- Weak encryption restriction
  - Restrict/Do not restrict
- Weak certificate restriction
  - Restrict/Do not restrict
- Advanced setup
  - User-ID/Username/Password/Authentication server name
- Last authentication result

SNTP settings

- Client operation status
  - Active/Inactive
- NTP/SNTP server address
- Polling interval

Spanning tree setting

- Active/Inactive

LPR protocol setting

- Enable/Disable

RAW protocol

- ON/OFF

LLMNR

- ON/OFF

Wireless LAN DRX setting

- Enable/Disable

Wired LAN DRX setting

- Enable/Disable

Direct connection settings

		Update SSID/password	
		Direct connection device name	
		Connection request confirmation	
			Yes/No
	Reset SSL certificates		
Reset LAN settings			

Paper-related settings	
Manage remaining roll amount	
	Enable/Disable
Roll paper auto switching	
	Identify size/Do not identify size
Keep media type	
	Enable/Disable
Detect paper setting mismatch	
	Pause/Display warning/Do not detect/Hold job
Paper retention setting	
	Release/Retain
Advanced paper settings	
Paper size recognition settings	
	Cut sheet setting 1/Cut sheet setting 2/Roll paper setting 1/Roll paper setting 2
Adjust roll unit	
Print advanced paper settings	
Reset paper settings for all paper	

Auto maintenance settings		
	Auto nozzle check	
		Standard/1 page/10 pages/Disable
	Nozzle check error display	
		Enable/Disable

	System cleaning frequency	
		Standard/Short
	Print pattern after new head	
		ON/OFF

Hard disk settings		
	Output method	
		Print/Print (auto delete)/Save to job box
	Save first and print	
		ON/OFF
	Common job box setting	
		Print/Print (auto delete)
	Data deletion	
		Fast/Fast secure/Secure

Monitoring service settings		
	Enable/disable monitoring service	
		Enable/Disable
	Communication test	
		Yes/No
	Communication log	

Device user settings		
Energy saving settings		
	Auto power off	
		5 minutes/10 min./30 min./1 hour/4 hours/8 hours/12 hours/OFF
	Sleep timer	
		5 minutes/10 min./15 min./20 min./30 min./40 min./50 min./60 min./210 min.
Operation restrictions		
	Job history	
		Restrict/Do not restrict

	Remote UI	
		Restrict/Do not restrict
	Print from USB flash drive	
		Restrict/Do not restrict
Use USB connection		
	Use/Do not use	
Date/time setting		
Date display format		
	YYYY/MM/DD / MM/DD/YYYY / DD/MM/YYYY	
Time zone (GMT)		
	0/+1/+2/+3/+4/+5/+6/+7/+8/+9/+10/+11/+12/-12/-11/-10/-9/-8/-7/-6/-5/-4/-3/-2/-1	
Length unit setting		
	Meters/Feet/inches	
Buzzer setting		
	Enable/Disable	
EOP timer setting		
	10 seconds/30 seconds/1 minute/2 minutes/5 minutes/10 minutes/30 minutes/60 minutes	
Job history sending setting		
	Send/Do not send	

Language selection	

Administrator password setting	
	Remote UI or other tools/LCD, Remote UI, or other tools

- **Printer information**

System information	

Hard disk information	

Error history	
	Hardware error
	Recoverable error

Records of use
Head information
Head alignment performance log
Values applied with auto settings

Changing Settings from Operation Panel

This section describes the procedure to change the settings in the **Device settings** screen, taking the steps to specify **Print head movable width setting** as an example.

1. Make sure printer is turned on.

2. Flick HOME screen and tap **Device settings**.

   Menu Operations

   The **Device settings** screen appears.

3. Tap setting item to adjust.

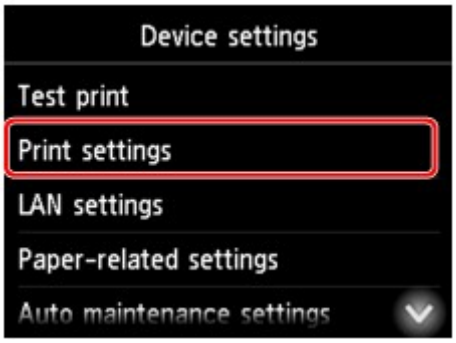

   The setting screen for the selected item appears.

4. Tap setting item.

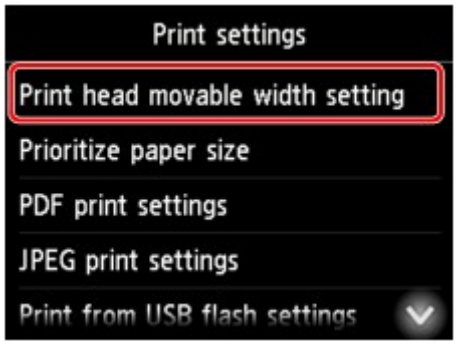

5. Tap setting to specify.

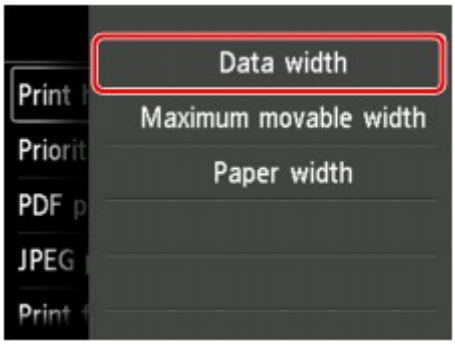

For more on setting items on the operation panel:

- Setting Items on Operation Panel

Setting Items on Operation Panel

Note

- The administrator password is required to change some setting items if it is enabled for changing settings using the operation panel.

  For more on setting items which the administrator password is required:

  - Setting Administrator Password on Operation Panel

Items for Security

- Administrator password setting

Items for Printer

- Device user settings
- Hard disk settings
- Language selection

Items for Paper/Printing

- Paper-related settings
- Print settings

Items for Maintenance/Management

- Job management
- Printer information
- Test print
- LAN settings
- Auto maintenance settings
- Special administration mode

Job management

Select this setting item from HOME screen.

- **Print job**

  Displays the print job list. Tapping a job displays the details. You can also delete or preempt jobs on this menu.

- **Saved job**

  Displays the saved print job list. You can print job list on each saving box.

  Note

  - Enter the password if it is enabled for a personal box using Remote UI.

- **Job history**

  Important

  - The administrator password is required to display the job history if it is enabled for changing settings using the operation panel.

  - **Display job history**

    Displays the print job history. Tapping a print job displays the details.

  - **Print job history**

    Prints out the print job history.

- **Pause printing**

  Selecting **Enable** while a print job is in progress pauses the print job after the current job is completed.

Test print

Select this setting item from **Device settings**.

- **Print nozzle check pattern**

  Prints out the nozzle check pattern.

  Checking for Nozzle Clogging

- **Status print**

  Prints out the printer status and setting value information.

  Status Print

- **Print LAN details**

  Prints out the network information list.

  Printing Network Settings

- **Print setting print**

  Prints out the print settings list.

- **Print advanced paper settings**

  Prints out the setting values specified by **Advanced paper settings**.

- **Print job history**

  Prints out a record of print jobs, including the paper type and size, amount of ink consumed, and so on. Ink consumption indicates a rough estimate of the amount of ink consumed per print job.

  Job management

- **Print menu map**

  Prints out the menu list.

Print settings

Select this setting item from **Device settings**.

- **Print head movable width setting**

  Adjusts the print head movable width.

- **Prioritize paper size**

  Select **Enable** to use the paper size setting as the basis for printing instead of other settings. The text or images in the margin are not printed.

  Select **Disable** to give priority to printing text or images.

  Note

  - The printed paper length is longer than the actual paper length. This is because the printed paper includes the upper/lower margins specified by **Roll Paper Safety Margin** and **Leading Edge Margin** in the printer driver and excludes the paper margins.

- **PDF print settings**

  Performs PDF print settings.

- **JPEG print settings**

  Performs JPEG print settings.

- **Print from USB flash settings**

  Performs settings for printing data saved on the USB flash drive.

  Setting Items for Printing Using Operation Panel

- **Print setting print**

  Prints out the print settings list.

LAN settings

Select this setting item from **Device settings**.

Important

- The administrator password is required to change settings if it is enabled for changing settings using the operation panel.

- **Change LAN**

  Enables either wireless LAN, wired LAN, or direct connection. You can also disable all.

- **Wireless LAN setup**

  Selects the setup method for wireless LAN connection.

  ### Note

  - You can also enter this setting menu by selecting **LAN settings** on the HOME screen. In this case, enable wireless LAN.

  - **Cableless setup**

    Select if you specify the settings of the access point information to the printer directly from a device (e.g. smartphone, or tablet) without operating the wireless router. Follow the on-screen instructions of the connecting device for the setup procedure.

  - **Standard setup**

    Select when you perform settings for wireless LAN manually using the operation panel of the printer.

  - **WPS (Push button method)**

    Select when you perform settings for wireless LAN using a wireless router supporting a Wi-Fi Protected Setup (WPS) push button method. Follow the on-screen instructions during setup.

  - **Other setup**

    - **Advanced setup**

      Select when you perform settings for wireless LAN manually. You can specify multiple WEP keys.

    - **WPS (PIN code method)**

      Select when you perform settings for wireless LAN using a wireless router supporting a Wi-Fi Protected Setup (WPS) PIN code method. Follow the on-screen instructions during setup.

- **Confirm LAN settings**

  The list of wireless/wired LAN settings or the direct connection of this printer is displayed on the touch screen.

  For more information on the printer's network setting is printed out:

  Printing Network Settings

  ### Important

  - The network settings printout contains important information about your network. Handle it with care.

◦ **LAN setting list**

The list of wired LAN settings of this printer is displayed on the touch screen.

The following setting items are displayed. (Some setting items are not displayed depending on the printer settings.)

Items	Setting
Connection	Active/Inactive
IPv4 address	XXX. XXX. XXX. XXX (12 characters)
IPv4 subnet mask	XXX. XXX. XXX. XXX (12 characters)
IPv4 default gateway	XXX. XXX. XXX. XXX (12 characters)
IPv4 DNS dynamic setting	Active/Inactive
IPv4 DNS host name	XXXXXXXXXXXX
IPv4 DNS domain name	XXXXXXXXXXXX
IPv6 address	XXXX: XXXX: XXXX: XXXX: XXXX: XXXX: XXXX: XXXX (32 characters)
IPv6 default gateway	XXXX: XXXX: XXXX: XXXX: XXXX: XXXX: XXXX: XXXX (32 characters)
IPv6 subnet prefix length	XXX (up to 3 digits)
IPv6 link-local address	XXXX: XXXX: XXXX: XXXX: XXXX: XXXX: XXXX: XXXX (32 characters)
IPv6 link-local prefix length	XXX (up to 3 digits)
IPv6 manual address	XXXX: XXXX: XXXX: XXXX: XXXX: XXXX: XXXX: XXXX (32 characters)
IPv6 manual prefix length	XXX (up to 3 digits)
IPv6 stateless address 1	XXXX: XXXX: XXXX: XXXX: XXXX: XXXX: XXXX: XXXX (32 characters)
IPv6 stateless prefix length 1	XXX (up to 3 digits)
IPv6 stateless address 2	XXXX: XXXX: XXXX: XXXX: XXXX: XXXX: XXXX: XXXX (32 characters)
IPv6 stateless prefix length 2	XXX (up to 3 digits)
IPv6 stateless address 3	XXXX: XXXX: XXXX: XXXX: XXXX: XXXX: XXXX: XXXX (32 characters)
IPv6 stateless prefix length 3	XXX (up to 3 digits)

IPv6 stateless address 4	XXXX: XXXX: XXXX: XXXX: XXXX: XXXX: XXXX: XXXX (32 characters)
IPv6 stateless prefix length 4	XXX (up to 3 digits)
IPv6 default gateway 1	XXXX: XXXX: XXXX: XXXX: XXXX: XXXX: XXXX: XXXX (32 characters)
IPv6 default gateway 2	XXXX: XXXX: XXXX: XXXX: XXXX: XXXX: XXXX: XXXX (32 characters)
IPv6 default gateway 3	XXXX: XXXX: XXXX: XXXX: XXXX: XXXX: XXXX: XXXX (32 characters)
IPv6 default gateway 4	XXXX: XXXX: XXXX: XXXX: XXXX: XXXX: XXXX: XXXX (32 characters)
DHCPv6	Active/Inactive
DHCPv6 stateful address	XXXXXXXXXXXX
DHCPv6 stateful prefix length	XXX (up to 3 digits)
IPv6 primary DNS server address	XXXXXXXXXXXX
IPv6 secondary DNS server add.	XXXXXXXXXXXX
IPv6 DNS dyn. update: manual	Active/Inactive
IPv6 DNS dyn. update: stateless	Active/Inactive
IPv6 DNS dyn. update: stateful	Active/Inactive
IPv6 Use IPv4 host/domain name	Active/Inactive
IPv6 DNS host name	XXXXXXXXXXXX
IPv6 DNS domain name	XXXXXXXXXXXX
MAC address	XX:XX:XX:XX:XX:XX (12 characters)
IPsec settings	Enable (ESP)/Enable (ESP & AH)/Enable (AH)/Disable
Pre-shared key	XXXXXXXXXXXXXXXX (16 characters)
Authentication	**TLS/TTLS/PEAP/TTLS/PEAP/EAP-TTLS internal auth. method/ MSCHAPv2/PAP/Do not use**
EAP-TTLS internal auth. method	**MSCHAPv2/PAP**
Weak encryption restriction	**Restrict/Do not restrict**
Weak certificate restriction	**Restrict/Do not restrict**
Authentication server name	XXXXXXXXXXXX
Client operation status	XXXXXXXXXXXX

NTP/SNTP server address	XXXXXXXXXXXX
Polling interval	XXXXXXXXXXXX
Spanning tree setting	XXXXXXXXXXXX
Printer name	XXXXXXXXXXXXXXX (up to 15 characters)
Bonjour service name	XXXXXXXXXXXXX XXXXXXXXXXXXX XXXXXXXXXXXXX XXXXXXXXXXXXX (up to 52 characters)
Root cert. thumbprint (SHA-1)	XXXXXXXX XXXXXXXX XXXXXXXX XXXXXXXX XXXXXXXX
Root cert. thumbprint (SHA-256)	XXXXXXXX XXXXXXXX XXXXXXXX XXXXXXXX XXXXXXXX XXXXXXXX XXXXXXXX XXXXXXXX

("XX" represents alphanumeric characters.)

- **WLAN setting list**

The list of wireless LAN settings of this printer is displayed on the touch screen.

The following setting items are displayed. (Some setting items are not displayed depending on the printer settings.)

Items	Setting
Connection	Active/Inactive
SSID	XXXXXXXXXXXXXXXX XXXXXXXXXXXXXXXX (up to 32 characters)
Communication mode	Infrastructure
Channel	XX (up to 2 digits)
Wireless LAN security	Inactive/WEP(64bit)/WEP(128bit)/WPA-PSK(TKIP)/WPA-PSK(AES)/ WPA2-PSK(TKIP)/WPA2-PSK(AES)
IPv4 address	XXX. XXX. XXX. XXX (12 characters)
IPv4 subnet mask	XXX. XXX. XXX. XXX (12 characters)
IPv4 default gateway	XXX. XXX. XXX. XXX (12 characters)
IPv4 DNS dynamic setting	Active/Inactive
IPv4 DNS host name	XXXXXXXXXXXX
IPv4 DNS domain name	XXXXXXXXXXXX
IPv6 address	XXXX: XXXX: XXXX: XXXX: XXXX: XXXX: XXXX: XXXX (32 characters)

IPv6 default gateway	XXXX: XXXX: XXXX: XXXX: XXXX: XXXX: XXXX: XXXX (32 characters)
IPv6 subnet prefix length	XXX (up to 3 digits)
IPv6 link-local address	XXXX: XXXX: XXXX: XXXX: XXXX: XXXX: XXXX: XXXX (32 characters)
IPv6 link-local prefix length	XXX (up to 3 digits)
IPv6 manual address	XXXX: XXXX: XXXX: XXXX: XXXX: XXXX: XXXX: XXXX (32 characters)
IPv6 manual prefix length	XXX (up to 3 digits)
IPv6 stateless address 1	XXXX: XXXX: XXXX: XXXX: XXXX: XXXX: XXXX: XXXX (32 characters)
IPv6 stateless prefix length 1	XXX (up to 3 digits)
IPv6 stateless address 2	XXXX: XXXX: XXXX: XXXX: XXXX: XXXX: XXXX: XXXX (32 characters)
IPv6 stateless prefix length 2	XXX (up to 3 digits)
IPv6 stateless address 3	XXXX: XXXX: XXXX: XXXX: XXXX: XXXX: XXXX: XXXX (32 characters)
IPv6 stateless prefix length 3	XXX (up to 3 digits)
IPv6 stateless address 4	XXXX: XXXX: XXXX: XXXX: XXXX: XXXX: XXXX: XXXX (32 characters)
IPv6 stateless prefix length 4	XXX (up to 3 digits)
IPv6 default gateway 1	XXXX: XXXX: XXXX: XXXX: XXXX: XXXX: XXXX: XXXX (32 characters)
IPv6 default gateway 2	XXXX: XXXX: XXXX: XXXX: XXXX: XXXX: XXXX: XXXX (32 characters)
IPv6 default gateway 3	XXXX: XXXX: XXXX: XXXX: XXXX: XXXX: XXXX: XXXX (32 characters)
IPv6 default gateway 4	XXXX: XXXX: XXXX: XXXX: XXXX: XXXX: XXXX: XXXX (32 characters)
DHCPv6	Active/Inactive
DHCPv6 stateful address	XXXXXXXXXXXX
DHCPv6 stateful prefix length	XXX (up to 3 digits)
IPv6 primary DNS server address	XXXXXXXXXXXX
IPv6 secondary DNS server add.	XXXXXXXXXXXX

IPv6 DNS dyn. update: manual	Active/Inactive
IPv6 DNS dyn. update: stateless	Active/Inactive
IPv6 DNS dyn. update: stateful	Active/Inactive
IPv6 Use IPv4 host/domain name	Active/Inactive
IPv6 DNS host name	XXXXXXXXXXXX
IPv6 DNS domain name	XXXXXXXXXXXX
MAC address	XX:XX:XX:XX:XX:XX (12 characters)
IPsec settings	Enable (ESP)/Enable (ESP & AH)/Enable (AH)/Disable
Pre-shared key	XXXXXXXXXXXXXXXX (16 characters)
Client operation status	XXXXXXXXXXXX
NTP/SNTP server address	XXXXXXXXXXXX
Polling interval	XXXXXXXXXXXX
Printer name	XXXXXXXXXXXXXXX (up to 15 characters)
Bonjour service name	XXXXXXXXXXXXX XXXXXXXXXXXXX XXXXXXXXXXXXX XXXXXXXXXXXXX (up to 52 characters)
Root cert. thumbprint (SHA-1)	XXXXXXXX XXXXXXXX XXXXXXXX XXXXXXXX XXXXXXXX
Root cert. thumbprint (SHA-256)	XXXXXXXX XXXXXXXX XXXXXXXX XXXXXXXX XXXXXXXX XXXXXXXX XXXXXXXX XXXXXXXX

("XX" represents alphanumeric characters.)

- **Direct connection setting list**

  The list of direct connection settings of this printer is displayed on the touch screen.

  The following setting items are displayed. (Some setting items are not displayed depending on the printer settings.)

Items	Setting
Connection	Active/Inactive
SSID	DIRECT-XXXX-XXXXXXseries
Password	XXXXXXXXXX (10 characters)
Communication mode	**Direct connection**
Channel	3

Wireless LAN security	WPA2-PSK(AES)
IPv4 address	XXX. XXX. XXX. XXX (12 characters)
IPv4 subnet mask	XXX. XXX. XXX. XXX (12 characters)
IPv4 default gateway	XXX. XXX. XXX. XXX (12 characters)
IPv4 DNS dynamic setting	Active/Inactive
IPv4 DNS host name	XXXXXXXXXXXX
IPv4 DNS domain name	XXXXXXXXXXXX
IPv6 address	XXXX: XXXX: XXXX: XXXX: XXXX: XXXX: XXXX: XXXX (32 characters)
IPv6 default gateway	XXXX: XXXX: XXXX: XXXX: XXXX: XXXX: XXXX: XXXX (32 characters)
IPv6 subnet prefix length	XXX (up to 3 digits)
IPv6 link-local address	XXXX: XXXX: XXXX: XXXX: XXXX: XXXX: XXXX: XXXX (32 characters)
IPv6 link-local prefix length	XXX (up to 3 digits)
MAC address	XX:XX:XX:XX:XX:XX (12 characters)
IPsec settings	Enable (ESP)/Enable (ESP & AH)/Enable (AH)/Disable
Pre-shared key	XXXXXXXXXXXXXXXX (16 characters)
Printer name	XXXXXXXXXXXXXXX (up to 15 characters)
Bonjour service name	XXXXXXXXXXXXX XXXXXXXXXXXXX XXXXXXXXXXXXX XXXXXXXXXXXXX (up to 52 characters)
Direct connection device name	XXXXXX-XXXXXXseries
Root cert. thumbprint (SHA-1)	XXXXXXXX XXXXXXXX XXXXXXXX XXXXXXXX XXXXXXXX
Root cert. thumbprint (SHA-256)	XXXXXXXX XXXXXXXX XXXXXXXX XXXXXXXX XXXXXXXX XXXXXXXX XXXXXXXX XXXXXXXX

("XX" represents alphanumeric characters.)

- **Other settings**

Important

- You cannot select the items below when **Disable LAN** is selected for **Change LAN**.

  - **Set printer name**

Specifies the printer name. You can use up to 15 characters for the name.

Note

- You cannot use the same printer name as that already used for other LAN connected devices.
- You cannot use a hyphen for the initial or last character of the printer name.

◦ **TCP/IP settings**

Performs IPv4 or IPv6 setting.

◦ **WSD setting**

Setting items when you use WSD (one of the network protocols supported in Windows 10, Windows 8.1, Windows 8, Windows 7, and Windows Vista).

■ **Enable/disable WSD**

Selects whether WSD is enabled or disabled.

Note

- When this setting is enabled, the printer icon is displayed on the Network Explorer in Windows 10, Windows 8.1, Windows 8, Windows 7, and Windows Vista.

■ **Optimize inbound WSD**

Selecting **Enable** allows you to receive the WSD printing data faster.

■ **Timeout setting**

Specifies the timeout length.

◦ **Bonjour settings**

Setting items for LAN using Bonjour for Mac OS.

■ **Enable/disable Bonjour**

Selecting **Enable** allows you to use Bonjour to perform the network settings.

■ **Service name**

Specifies the Bonjour service name. You can use up to 48 characters for the name.

Note

- You cannot use the same service name as that already used for other LAN connected devices.

◦ **IEEE802.1X settings**

Performs various settings for IEEE802.1.X.

◦ **SNTP settings**

Performs various settings for SNTP (Simple Network Time Protocol).

◦ **Spanning tree setting**

Enables/Disables spanning tree. Selecting **Enable** avoids circulating data on a network.

◦ **LPR protocol setting**

Enables/Disables the LPR setting.

- **RAW protocol**

  Enables/Disables RAW printing.

- **LLMNR**

  Enables/Disables LLMNR (Link-Local Multicast Name Resolution). Selecting **Active** allows the printer to detect printer's IP address from the printer name without a DNS server.

- **Wireless LAN DRX setting**

  Selecting **Enable** allows you to activate discontinuous reception when using wireless LAN.

- **Wired LAN DRX setting**

  Selecting **Enable** allows you to activate discontinuous reception when the printer is connected to a device compatible with wired LAN.

- **Direct connection settings**

  Setting items are available when you connect a device to the printer.

  Important

  - You can select these setting items only when **Activate direct connect.** is selected for **Change LAN**.

  - **Update SSID/password**
  - Selecting **Yes** updates the identifier (SSID) and password for direct connection.

- **Direct connection device name**

  Changes the printer's name displayed on a Wi-Fi Direct compatible device.

- **Connection request confirmation**

  Selecting **Yes** displays the confirmation screen when a Wi-Fi Direct compatible device is connecting the printer.

  Connecting Smartphone/Tablet to Printer Directly via Wireless LAN (Direct Connection)

- **Reset LAN settings**

  Initializes the network settings on the printer.

  After resetting, perform setup again as necessary.

Device user settings

Select this setting item from **Device settings**.

Important

- The administrator password is required to change settings if it is enabled for changing settings using the operation panel.

- **Energy saving settings**

  To save electricity, enable this setting to turn off the printer automatically or to enter sleep mode when specified length of time has elapsed.

  - **Auto power off**

    Sets the time until the printer turns off automatically. If no operations are performed on the printer for the specified duration of the time after entering Sleep mode, the printer automatically turns off.

  - **Sleep timer**

    Specifies the length of time to enter sleep mode automatically when no operation is made.

- **Operation restrictions**

  Restricts the following operations.

  - **Job history**

    Restricts to display the print job history.

  - **Remote UI**

    Restricts to use Remote UI.

  - **Print from USB flash drive**

    Restricts to print data on USB flash drive.

- **Use USB connection**

  Enables/Disables USB connection.

- **Date/time setting**

  Sets the current date and time.

- **Date display format**

  Sets the format of dates displayed on the touch screen and printed on photos.

- **Time zone (GMT)**

  Specifies the time zone according to a country or region you live in.

  Specifying the time zone allows you to display the correct time and date an e-mail was sent on your mail software.

  Select the time difference from GMT (Greenwich mean time) according to a country or region you live in.

- **Length unit setting**

  Selects the length unit (meter or feet/inch).

- **Buzzer setting**

  The printer beeps once for warnings, and 3 times for errors when **Enable** is selected.

- **EOP timer setting**

  Specify the timeout period before cancellation of print jobs that cannot be received by the printer.

- **Job history sending setting**

  The printer sends a job history tool when **Send** is selected.

Language selection

Select this setting item from **Device settings**.

Important

- The administrator password is required to change settings if it is enabled for changing settings using the operation panel.

Changes the language for the messages and menus on the touch screen.

Paper-related settings

Select this setting item from **Device settings**.

- **Manage remaining roll amount**

  Select **ON** to print a barcode at the end of a roll before you remove it. The printed barcode can be used in managing the amount of roll paper left. Select **OFF** if you prefer not to print the barcode.

- **Roll paper auto switching**

  Enables/Disables switching roll paper feed position by detecting the paper size.

- **Keep media type**

  Select **Enable** to keep using the same type of paper.

- **Detect paper setting mismatch**

  Selects printer action when you start printing with the paper size, the media type, and print settings different from those registered.

- **Paper retention setting**

  Selects whether to contact the roll nip with the rolls in feeding paper.

  If you select **Release**, the roll nip does not contact with the rolls and you can feed paper manually. If you select **Retain**, the roll nip contacts with the rolls and automatic feeding is enabled. Selecting **Release** does not allow you to switch the paper source of rolls (upper or lower) automatically.

- **Advanced paper settings**

  Specifies advanced paper settings for each paper feed position.

  Important

  - You can select **Extension for borderless printing** as a setting item for some paper types.

    If you select **Small** for **Paper with adequate width** on this setting item, a slight border remains on the paper. In addition, the paper may be smudged with extra ink.

- **Paper size recognition settings**

  Selects which size is preferred when paper size detection is enabled.

  - **Cut sheet setting 1**

    Select whether ISO A3+ or 13"x19"(Super B) is applied when a sheet of an intermediate size is detected.

  - **Cut sheet setting 2**

    Select whether ISO B1 or 28"x40" (ANSI F) is applied when a sheet of an intermediate size is detected.

  - **Roll paper setting 1**

    Select whether A3 or 300 mm is applied when a sheet of an intermediate size is detected.

  - **Roll paper setting 2**

Select whether B4 or 10 inch is applied when a sheet of an intermediate size is detected.

- **Adjust roll unit**

  Select this setting item when you replace the roll unit.

- **Print advanced paper settings**

  Tapping **Yes** prints out each setting specified in **Advanced paper settings**.

- **Reset paper settings for all paper**

  Tapping **Yes** initializes each setting specified in **Advanced paper settings**.

  Entering the administrator password is required if it is enabled.

Important

- When you set the paper settings back to the factory default, added or updated paper information using Media Configuration Tool is erased.

  In addition, the color calibration values are also erased.

  Perform color calibration to specify the color calibration values.

Auto maintenance settings

Select this setting item from **Device settings**.

Important

- The administrator password is required to change settings if it is enabled for changing settings using the operation panel.

- **Auto nozzle check**

  Enables/Disables automatic nozzle checking. You can also select the page interval to perform automatic nozzle checking.

- **Nozzle check error display**

  Enables/Disables displaying the nozzle check error.

- **System cleaning frequency**

  Specifies the frequency of automatic system cleaning.

  ### Note

  - To maintain print quality, we recommend you select **Short** if you use the printer at a higher place.

- **Print pattern after new head**

  Selects whether you print an adjustment pattern after replacing the print head.

Administrator password setting

Select this setting item from **Device settings**.

Important

- The administrator password is required to change settings if it is enabled for changing settings using the operation panel.

You can specify or disable the administrator password.

If you specify the administrator password, select the range and specify the administrator password.

Remote UI or other tools

Entering the administrator password is required to change the setting items using Remote UI or some software.

LCD, Remote UI, or other tools

Entering the administrator password is required to change the setting items using the operation panel of the printer, Remote UI, or some software.

For details:

Setting Administrator Password on Operation Panel

Setting Administrator Password on Operation Panel

You can specify or disable the administrator password.

Specifying the administrator password requires you to enter the password to use the items or change the settings below.

- **LAN settings**
- **Device user settings**
- **Language selection**
- **Auto maintenance settings**
- **Hard disk settings**
- **Administrator password setting**
- **Status print (administrator)**
- **Special administration mode**

Follow the procedure below to specify the administrator password.

1. Make sure printer is turned on.

2. Flick HOME screen and tap **Device settings**.

   Menu Operations

   The **Device settings** screen appears.

3. Tap **Administrator password setting**.

4. When confirmation screen to specify administrator password is displayed, tap **Yes**.

   If an administrator password is not specified, the register confirmation message appears. Tapping **Yes** displays the message again. Tap **OK**.

   Important

   - The administrator password is set at the time of purchase. The printer's serial number is used as the password.

     For the administrator password, refer to Administrator Password.

5. Tap **Change administrator password**.

   If you do not specify an administrator password, tap **Remove administrator password**. Tapping **Yes** displays the message again. Tap **OK**.

6. Tap range where administrator password is valid.

   Remote UI or other tools

   Entering the administrator password is required to change the setting items using Remote UI or some software.

LCD, Remote UI, or other tools

Entering the administrator password is required to change the setting items using the operation panel of the printer, Remote UI, or some software.

7. Enter administrator password.

Important

- The following character restrictions apply to the password:
  - Set the password by using 4 to 32 characters.
  - The allowed characters are single-byte alphanumeric characters.
  - For security reasons, we recommend you use 6 and more alphanumeric characters.

8. Tap **Apply**.

9. Enter administrator password you specified again.

10. Tap **Apply**.

    The administrator password is enabled.

When You Want to Change or Disable the Administrator Password:

When the administrator password is enabled, tapping **Device settings** and **Administrator password setting** in this order and entering the administrator password displays **Change administrator password** and **Remove administrator password** on the touch screen. Select either item and follow the on-screen instructions to perform settings.

Hard disk settings

Select this setting item from **Device settings**.

Important

- The administrator password is required to change settings if it is enabled for changing settings using the operation panel.

- **Output method**

  Selects the printing method for jobs received from software other than the printer driver. When using the printer driver, configure settings on the printer.

  - **Print**

    Performs printing as usual.

  - **Print (auto delete)**

    Deletes the data from the printer's hard disk after printing is completed.

  - **Save to job box**

    Only saves the print job in the box without printing it.

- **Save first and print**

  A setting for jobs received from software other than the printer driver. When using the printer driver, configure settings on the printer. Select **ON** to print the job after it has been saved.

- **Common job box setting**

  Select **Print (auto delete)** to print without saving jobs in the box shared among multiple users.

- **Data deletion**

  Selects the method to delete data on printer's hard disk.

  Erasing Data on Printer's Hard Disk

Special administration mode

Select this setting item from **Device settings**.

Important

- The administrator password is required to change settings if it is enabled for changing settings using the operation panel.

- **Enable/disable monitoring service**

  Selecting **Active** allows the printer to send error details to the service center.

- **Communication test**

  Performs a communication test with the service center.

- **Communication log**

  Displays the list of error numbers (up to 30), error code, and time the error occurs. Tapping an item displays the error details.

Printer information

Select this setting item from HOME screen.

- **System information**

  Displays printer's system information.

- **Hard disk information**

  Displays the total hard disk capacity and the mail box free space.

- **Error history**

  Displays the error history.

  - **Hardware error**

    Displays the hardware error codes (up to 5).

  - **Recoverable error**

    Displays the recoverable error (e.g. paper or ink related error) codes (up to 5).

  For more on the error code, refer to List of Support Code for Error.

- **Records of use**

  Displays the printer's record of use such as total print area or the amount of ink consumption.

- **Head information**

  Displays the print head serial number, elapsed days since the current print head was installed, and dot count.

- **Head alignment performance log**

  Displays the print head alignment performance log (up to 5).

- **Values applied with auto settings**

  Displays the print settings applied the last print job.

Status Print

You can print a "Status Print" report indicating the current status of the printer.

With "Status Print", information is printed regarding the printer firmware version, various settings, and the status of consumables.

Follow the procedure below to print.

1. Make sure printer is turned on.

2. Flick HOME screen and tap **Device settings**.

   Menu Operations

3. Tap **Test print**.

4. Tap **Status print**.

   Note

   - If you specify the administrator password, tap **Status print (administrator)**.

   The printer starts printing.

   The following information is included.

Canon xxxxxxxxxxxxxxxxxxxx Status Print	Printer model
S/N	Printer serial number
Firm	Firmware version
Boot	Boot ROM version
Date	When the status print report was printed

Paper Info	Prints information on the loaded paper for each paper feed position.

Job Menu			
	Job History		
		Log *	Information history about each job (Job name is printed as "*".)

* Printed only when you select **Status print (administrator)**.

Settings

	Printer Settings		
		Print Settings	Setting value of **Print head movable width setting**/**Prioritize paper size**
		Paper-related settings	Setting value of **Prioritize paper size**
	Device settings		
		Auto maintenance settings	Each setting value of **Auto maintenance settings**
		Hard disk settings	Each setting value of **Hard disk settings**
		Device user settings	Each setting value of **Device user settings**
		Language selection	Each setting value of **Language selection**
		Roll unit use setting *2	Each setting value of **Roll unit use setting**

*2 Printed only when you select **ON**.

Maintenance		
	Color calibration	Setting value of **Color calibration**

Usage Condition		
	Hard disk information	**Hard disk capacity** and **Job box free space**
	Hardware error	History information of **Hardware error**
	Error	History information of **Recoverable error**
	Warning	History information of warning
	Maintenance cartridge usage / Remaining ink level	Information of **Ink consumed**
	Duty counter	Information of **Duty counter**

PARTS STATUS		
	COUNTER	Prints out the parts status.

Head information

	HEAD LOT NUMBER/ DATE OF INSTALLATION	Print head lot number
	Head alignment performance log	

COUNTER		
	Media	Use of each specified media
	THE NUMBER OF CUTS	Total number of cuts
	AFTER INSTALLATION	Days of use

Changing Printer's Setting Using Web Browser

- Changing Settings Using Web Browser
- Changeable Setting Items Using Web Browser
- Setting Password
- Setting Mail Server
- Receiving Printer Status by E-mail

Changing Settings Using Web Browser

You can check the printer status and change the printer settings using the web browser on your smartphone, tablet, or computer.

To check the printer status and to change the printer settings, display "Remote UI" on the web browser.

Note

- Remote UI is a software that enables you to perform operations, which are usually performed on the printer's operation panel, using a Web browser over a network.

  LAN connection with the printer is required to use Remote UI.
- You can use Remote UI on the following OS and the web browser.
  - iOS device

    OS: iOS 7.0 or later

    Web browser: iOS standard Web browser (Mobile Safari)
  - Android device

    OS: Android 4.0 or later

    Web browser: Android standard Web browser (Browser or Chrome)
  - Mac OS device

    OS: Mac OS X v.10.6 or later

    Web browser: Safari 5.1 or later
  - Windows device

    OS: Windows Vista SP2 or later

    Web browser: Internet Explorer 9 or later, Google Chrome 41.0.2272.118m or later, Mozilla Firefox 37.0.1 or later

1. Make sure printer is turned on.

2. Check printer's IP address.

   Check the printer's IP address by following the steps below.

   1. Flick HOME screen and tap **Device settings**.

      Menu Operations

      The menu screen appears.
   2. Tap **LAN settings**.
   3. Tap **Confirm LAN settings**.
   4. Tap **LAN setting list** or **WLAN setting list**.
   5. Tap **Yes**.
   6. Check **IPv4 address**.

3. Open web browser on your smartphone, tablet, or computer and enter IP address.

   Enter as following in the URL field of the web browser.

   http://XXX.XX.X.XXX

   Enter the IP address in "XXX.XX.X.XXX".

   When you access, "Remote UI" will be displayed on the web browser on your smartphone, tablet, or computer.

4. If you display Remote UI for the first time on your smartphone, tablet, or computer, select **For secure communication**.

   Download the root certificate, and then register it.

   Registering Printer's Root Certificate to Web Browser

   Note

   - Once you register the root certificate to the web browser on your smartphone, tablet, or computer, this step is not necessary after the next time.
   - If the root certificate is not registered, a message to warn you that the secure connection is not guaranteed may appear.

5. Select **Log on**.

   The password authentication screen appears.

   Note

   - When the standard user mode is enabled, choose either administrator mode or standard user mode to log on.

     After choosing a mode and selecting **Log on**, the password authentication screen of each mode appears.

6. Enter password.

   When the password authentication is complete, the menus that can be utilized are displayed on the web browser.

   Important

   - The password is set at the time of purchase. The password is the printer serial number. The printer serial number is printed on the sticker attached on the printer. It consists of 9 alphanumeric characters (four alphabets followed by five numbers).

     For details on setting password, see Setting Password.

7. Check printer status and change printer settings.

   For changeable setting items, see below.

   Changeable Setting Items Using Web Browser

8. When you finish checking printer status and changing printer settings, select **Log off**.

9. Close web browser.

Changeable Setting Items Using Web Browser

Note

- The items described here and the items displayed in the web browser may differ in display order.
- The item which can be used is different in administrator mode or in standard user mode.

Items for Security

Security (Item for administrator)

This function allows you to specify the password, the standard user mode settings, and SSL/TLS settings of certificate for encrypted communication.

This function allows you to specify the password, the standard user mode settings, the operation restrictions, and SSL/TLS settings of certificate for encrypted communication.

For details on setting password, see Setting Password.

Items for Maintenance/Management

Utilities

This function allows you to set and execute the printer utility functions such as cleaning.

Job management

This function allows you to display the job history and print it.

Note

- When you are logging on in administrator mode, you can restrict this function in standard user mode.

System info and LAN settings

This function allows you to check the system information and to change the LAN settings.

Using **IP filtering** in **Other settings** in **LAN settings**, you can permit or refuse the connection of a specific IP address for IPv4 address or IPv6 address.

Using **SNMP settings** in **Other settings** in **LAN settings**, you can specify the SNMP and MIB setting to management the printer via a network.

Important

- If you have refused the IP address of administrator's device using **IP filtering** by mistake, reset LAN settings of the printer. To reset LAN settings, select **System info and LAN settings** > **LAN settings** > **Other settings** > **Reset LAN settings**, and then select **Yes**.

Note

- Some of the menu is available only when you logged on in administrator mode.

Language selection

This function allows you to change the language on the display.

Items for Printer

Device settings

This function allows you to change the printer settings such as the quiet setting, the energy saving settings, and the print settings.

Additionally, this function allows you to receive the printer status information such as the remaining ink level and the error.

- Setting Mail Server
- Receiving Printer Status by E-mail

Note

- Some of the menu is available only when you logged on in administrator mode.

Other Items

Printer status

This function displays printer information such as the remaining ink amount, the status, and detailed error information.

You can also connect to the ink purchase site or support page, and use Web Services.

Records of use

This function displays the total number of printing.

Manual (Online)

This function displays the *Online Manual*.

Setting Password

Each of passwords for administrator and standard user can be set.

When logging on with password for administrator, all settings can be changed.

When logging on with password for standard user, some of the settings can be changed.

When logging on with password for administrator, you can restrict the function for standard user.

- Setting Administrator Password
- Setting Standard User Password

Note

- Password can be set only when you are logged in administrator mode.

Setting Administrator Password

Change the administrator password by following the steps below.

Important

- The password is set at the time of purchase. The password is the printer serial number. The printer serial number is printed on the sticker attached on the printer. It consists of 9 alphanumeric characters (four alphabets followed by five numbers).

1. Display printer status on web browser.

2. Select **Security**.

   The menus appear.

3. Select **Administrator password setting**.

4. Select **Change administrator password**.

   If the administrator password is not set, registration confirming message is displayed. Select **Yes**. When message is displayed again, select **OK**.

5. Select range where administrator password is valid and select **OK**.

   Remote UI or other tools
   Entering the administrator password is required to change the setting items using the Remote UI or some software.

   Operation panel/Remote UI/other tools
   Entering the administrator password is required to change the setting items using the operation panel of the printer, the Remote UI, or some software.

6. Enter password and select **OK**.

   Important

   - The following character restrictions apply to the password:

- Set the password by using 4 to 32 characters.
- The allowed characters are single-byte alphanumeric characters.
- For security reasons, we recommend you use 6 and more alphanumeric characters.

7. When completion message appears, select **OK**.

Setting Standard User Password

For restricting the function for standard user, enable the standard user mode and set a standard user password by following the steps below.

1. Display printer status on web browser.

2. Select **Security**.

   The menus appear.

3. Select **Standard user mode settings**.

4. When confirming message appears, select **Yes**.

5. Enter password and select **OK**.

   Important

   - The following character restrictions apply to the password:
     - Set the password by using 4 to 32 characters.
     - The allowed characters are single-byte alphanumeric characters.
     - For security reasons, we recommend you use 6 and more alphanumeric characters.

6. When completion message appears, select **OK**.

Registering Printer's Root Certificate to Web Browser

If the printer's root certificate has not been registered to the web browser, a message to warn you that the secure connection is not guaranteed may appear.

When you display Remote UI for the first time on your smartphone, tablet, or computer, download the root certificate, and then register it to the web browser. The secure connection will be confirmed and a message will not appear.

How to register the root certificate varies depending on the web browser.

- For Internet Explorer
- For Safari
- For Chrome on Android
- For Mobile Safari on iOS

For other web browser, refer to each help.

Important

- Make sure that you have accessed to the printer IP address correctly by checking the URL field of the web browser before registering the root certificate.

For Internet Explorer

1. Select **Download** on Remote UI.

   Downloading the root certificate is started.

2. If confirmation screen appears, select **Open**.

   The **Certificate** screen appears.

   Note

   - To save the certificate file to your device and register it, select **Save**. Select **Internet options** from **Tool** menu of Internet Explorer, register the root certificate from **Certificates** on **Content** sheet.

3. Select **Install Certificate**.

   The **Certificate Import Wizard** screen appears.

4. Select **Next**.

5. Select **Place all certificates in the following store**.

6. Select **Browse**.

   The **Select Certificate Store** screen appears.

7. Select **Trusted Root Certification Authorities** and **OK**.

8. Select **Next** on **Certificate Import Wizard** screen.

9. If **Completing the Certificate Import Wizard** appears, select **Finish**.

   The **Security Warning** screen appears.

10. Make sure thumbprint on **Security Warning** screen matches printer's thumbprint.

    For printer's thumbprint, touch the **HOME** button, select **Device settings** > **LAN settings** > **Confirm LAN settings**, check **Root cert. thumbprint (SHA-1)** or **Root cert. thumbprint (SHA-256)**.

11. If thumbprint on **Security Warning** screen matches printer's thumbprint, select **Yes**.

12. Select **Yes** on **Certificate Import Wizard** screen.

    The root certificate registration is completed.

For Safari

1. Select **Download** on Remote UI.

   Downloading the root certificate is started.

2. Open download file.

   The **Add Certificates** screen appears.

3. Select **Add**.

   The certificate information appears.

4. Make sure thumbprint of certificate detail information matches printer's thumbprint.

   For printer's thumbprint, touch the **HOME** button, select **Device settings** > **LAN settings** > **Confirm LAN settings**, check **Root cert. thumbprint (SHA-1)** or **Root cert. thumbprint (SHA-256)**.

5. If thumbprint of certificate detail information matches printer's thumbprint, select **Always Trust**.

   The root certificate registration is completed.

   Note

   - If a password is set on your device, entering a password may be required.

For Chrome on Android

1. Select **Download** on Remote UI.

   Downloading the root certificate is started and then **Name the certificate** screen is displayed.

2. As entering the root certificate name is required, enter an arbitrary certificate name and select **OK**.

   The root certificate registration is completed.

   Note

   - If PIN or password is not set as security type, the attention screen may appear. Select **OK**, and then set the security type to PIN or password.

After Root Certificate Registration

We recommend that you make sure that the correct root certificate has been registered.

To make sure that the correct root certificate has been registered, make sure that thumbprint of certificate information matches printer's thumbprint. Follow the steps below.

Note

- Some Android devices cannot be checked the thumbprint of a registered route certificate.

1. From **Settings** menu on your device, select **Security**, **Trust credentials**, and **USER**.

   The list of downloaded certificates appears.

2. Select downloaded certificate.

   The certificate information appears.

3. Make sure that thumbprint of certificate information matches printer's thumbprint.

   For printer's thumbprint, touch the **HOME** button, select **Device settings** > **LAN settings** > **Confirm LAN settings**, check **Root cert. thumbprint (SHA-1)** or **Root cert. thumbprint (SHA-256)**.

4. If thumbprint of certificate information screen matches printer's thumbprint, select **OK**.

   The root certificate registration is completed.

   If the message to warn you that the secure connection is not guaranteed appears when you select **Log on** on Remote UI after registering the root certificate, restart the web browser. The message will not appear on the web browser.

Note

- Depending on the Android device, a warning may appear even after registering the proper root certificate.

For Mobile Safari on iOS

1. Select **Download** on Remote UI.

   Downloading the root certificate is started and then **Install Profile** screen is displayed.

2. Select **Install**.

   The **Warning** screen appears.

Note

- If a password is set on your device, entering a password may be required.

3. Select **Install**.

4. Select **Install** on displayed dialog.

   The root certificate registration is completed.

Setting Mail Server

To use mail function, specify the mail server settings.

Note

- If you did not specify the time zone setting using the printer's operation panel, a message to inform you that the correct time may not be reflected on the sent e-mail appears. We recommended that you set the time zone setting using the printer's operation panel.

  For the time zone setting, see Device user settings.
- These functions can be set only when you are logged in administrator mode.

1. Display printer status on web browser.

2. Select **Device settings**.

   The menus appear.

3. Select **Set mail server / test connect**.

4. Select **Set mail server**.

   The setting items for mail server appear.

5. Specify mail server settings.

   Specify the following items.

   Sender address
   Enter the e-mail address of the sender (this printer).

   Outgoing mail server (SMTP)
   Enter the address of your SMTP server.

   Port number (SMTP)
   Enter the port number of your SMTP server.

   Secure connection (SSL)
   Select if you use the secure connection (SSL).

   Don't verify certificates
   Select if you do not verify the certificate.

   Authentication method
   Select one of the following authentication methods.

   SMTP authentication
   Select if you send e-mail with SMTP authentication.

   Next, you can specify the following settings.

   - **Outgoing account**

     Enter the account name for sending to perform the authentication.
   - **Outgoing password**

Enter the password for sending to perform the authentication.

POP before SMTP

Select if you send e-mail with POP before SMTP authentication.

Next, you can specify the following settings.

- **Incoming mail server (POP3)**

  Enter the address of your POP server.

- **Port number (POP3)**

  Enter the port number of your POP server.

- **Incoming account**

  Enter the account name for receiving to perform the authentication.

- **Incoming password**

  Enter the password for receiving to perform the authentication.

- **Use APOP authentication**

  Select if you send the password by the encryption transmission.

- **Clear mailbox**

  Select if you delete the e-mails that remain in the POP3 server.

  Important

  - When this setting is enabled, e-mail in the Inbox on the server will have all been removed. If you specify the e-mail address of your everyday, be sure to disable this setting as unread e-mail is not deleted. We recommended that you prepare this printer dedicated e-mail account not to accidentally delete the unread e-mail.

No authentication

Select if the authentication is not necessary.

6. After specifying mail server settings, select **OK**.

The setting operation is completed.

Receiving Printer Status by E-mail

You receive the printer status information such as the remaining ink level and the error from the printer.

Note

- Specify the mail server settings in advance.

  Setting Mail Server

- If you did not specify the date and time setting using the printer's operation panel, the date and time may not be reflected on the sent e-mail. We recommended that you set the date and time setting using the printer's operation panel.

  For the date and time setting, see Device user settings.

- These functions can be set only when you are logged in administrator mode.

Specify the information settings by following the steps below.

1. Display printer status on web browser.

2. Select **Device settings**.

   The menus appear.

3. Select **Status notification e-mail**.

4. Select **Notification recipients**.

   The screen to register the destination appears.

5. Specify destination settings.

   Up to 5 destinations can be registered by following the steps below.

   1. Select number of destination.
   2. Select **Register**.
   3. Enter e-mail address, and then select printer status to send information.
   4. Select **OK**.

      The registration for destination is completed.

6. Select **Device settings** > **Status notification e-mail** > **Retry settings**.

7. Specify resending settings.

   The number of resending can be specified by following the steps below.

   1. Specify number of resending.
   2. Specify interval of resending.
   3. Select **OK**.

The resending setting is completed.

Printer Parts

- **Printer Parts**
  - Front
  - Back
  - Top Cover (Inside)
  - Carriage
  - Ink Tank Cover (Inside)
  - Operation Panel
- **Hard Disk**
  - Printer Hard Disk Operations
  - Checking Free Hard Disk Space
  - Erasing Data on Printer's Hard Disk
- **Optional accessories**
  - Roll Holder Set
  - Stand
  - Stand Parts
  - Parts of the Basket
  - Roll Unit
  - Parts of the Roll Unit

Printer Parts

- Front
- Back
- Top Cover (Inside)
- Carriage
- Ink Tank Cover (Inside)
- Operation Panel

Front

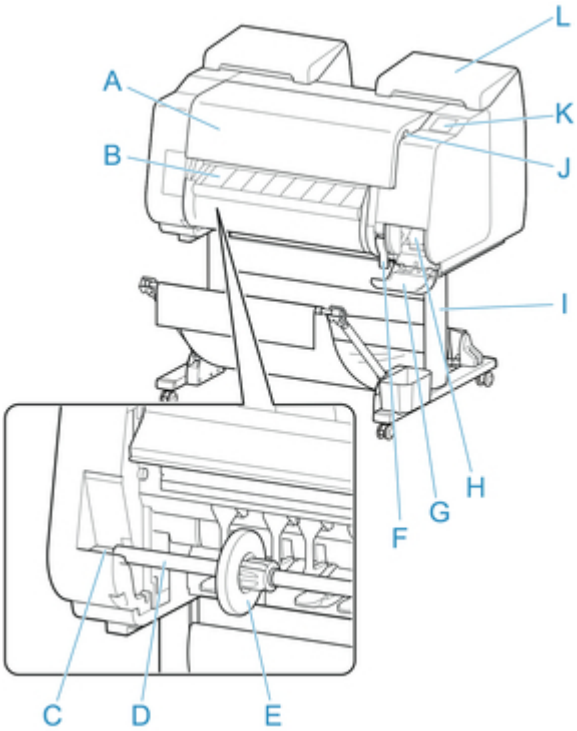

A. Top Cover
Open this cover to install the print head, load paper, and remove any jammed paper from inside the printer as needed. (See "Top Cover (Inside).")

B. Output Guide
Guides printed documents as they are ejected. Open this guide when loading a roll.

C. Roll holder Slot
Slide the Roll Holder into this slot.

D. Roll Holder
Load the roll on this holder.

E. Holder Stopper
Secure the roll on the Roll Holder with this part.

F. Release Lever
To release paper retainer, lift the lever.

G. Maintenance Cartridge Cover
Open this cover to replace the maintenance cartridge.

H. Maintenance Cartridge
Ink used for maintenance purposes such as head cleaning is absorbed. (Replace the cartridge when it is full.)

I. Stand
A stand that holds the printer. Equipped with casters to facilitate moving it. (See "Stand Parts.")

J. USB flash drive port

Insert a USB flash drive to this port.

K. Touch Screen

Use this screen to operate the printer and check the printer status. (See "Operation Panel.")

L. Ink Tank Cover

Open this cover to replace the ink tank. (See "Ink Tank Cover (Inside).")

Back

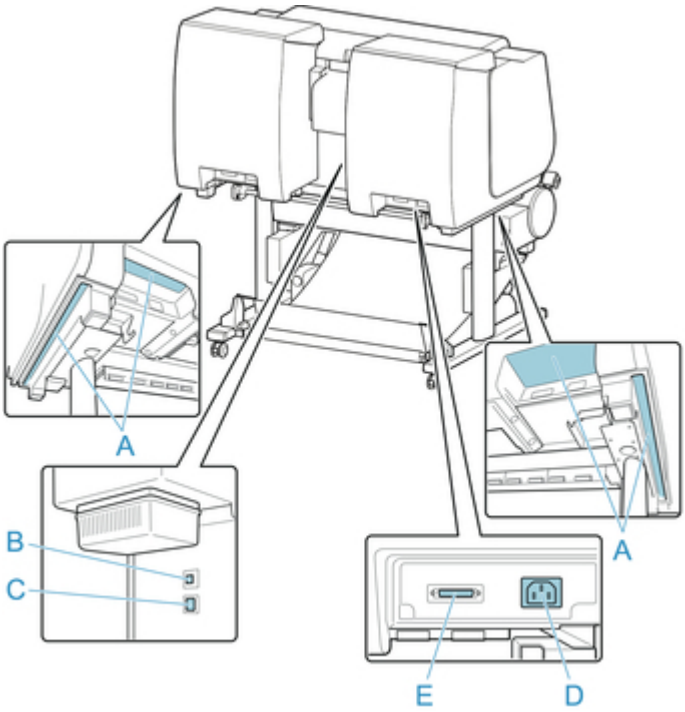

A. Carrying Grips
When carrying the printer, have six people hold it by these handles under both sides.

B. USB Port
Connect a USB cable to this port. The printer is compatible with Hi-Speed USB connections.

C. Wired LAN Connector
Connect an Ethernet cable to this port. The lamp is lit if the Ethernet cable is connected correctly and communication is possible between the computer and printer.

D. Power Cord Connector
Connect the power cord to this connector.

E. Roll Unit Power Supply Inlet
Connect the connection cord for the roll unit.

Top Cover (Inside)

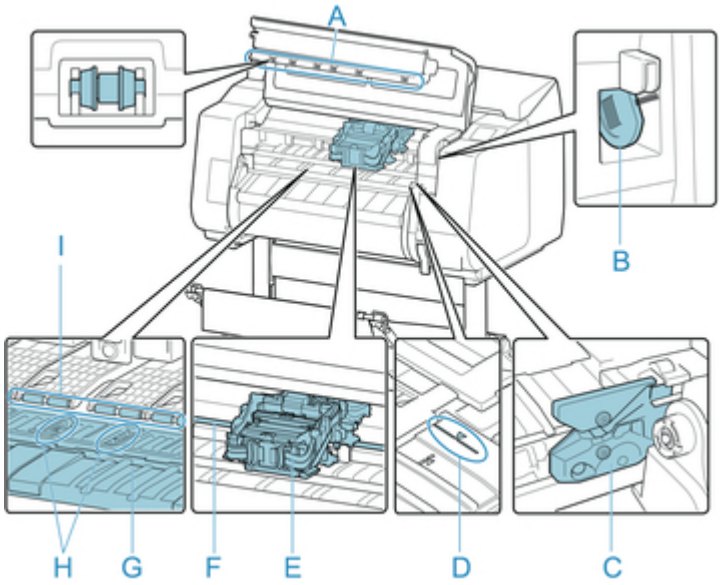

A. Top Cover Roller
Prevents paper from rising when ejected.

B. Cleaning Brush
When cleaning inside the printer under the top cover, use this brush to sweep away paper dust on the platen.

C. Cutter Blade
A round-bladed cutter for automatic paper cutting.

D. Paper Alignment Line
Align paper with this line when loading it.

E. Carriage
Moves the print head. It serves a key role in printing. (See "Carriage.")

F. Carriage Shaft
The Carriage slides along this shaft.

G. Platen
The print head moves across the platen to print. Vacuum holes on the platen hold paper in place.

H. Borderless Printing Ink Grooves
For catching ink outside the edges of paper during borderless printing.

I. Paper Retainer
Important in supplying the paper. This retainer holds paper as it is fed.

Carriage

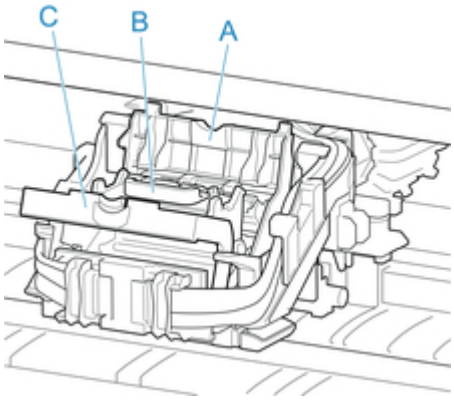

A. Print Head Locking Cover
Secures the print head.

B. Print Head
The printhead is equipped with ink nozzles. The carriage serves a key role in printing.

C. Print Head Lock Lever
Lock print head locking cover.

Ink Tank Cover (Inside)

Left Side	Right Side
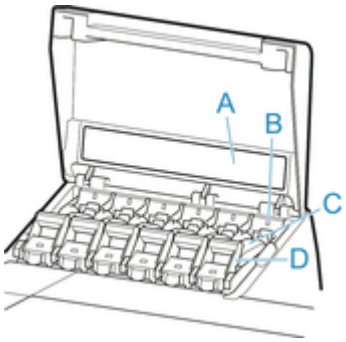	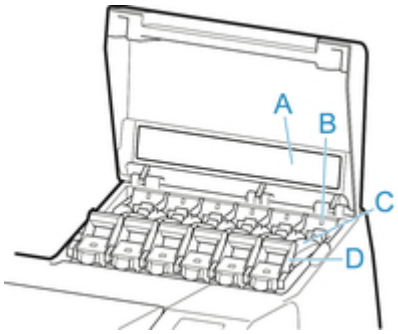

*1:The figure shows the printer as loaded with a 23.7 fl oz (700 ml) ink tank.

A. Ink Color Label
Load an ink tank that matches the color and name on this label.

B. Ink Lamp (red)
Indicates the state of the ink tank as follows when the ink tank cover is opened.

- On
  The ink tank is installed correctly.
- Off
  No ink tank is installed, or the ink level detection function is disabled.
- Flashing
  Ink tank is empty.

Note

- When there is little ink left, the ink lamp is lit and appears on the touch screen.

C. Ink Tank
Cartridges of ink in various colors.

D. Ink Tank Lock Lever
A lever that locks the ink tank in place and protects it. Lift and lower the lever when replacing an ink tank. To open it, lift the stopper of the lever until it stops, and then push it down toward the front. To close it, push it down until it clicks into place.

Hard Disk

- Printer Hard Disk Operations
- Checking Free Hard Disk Space
- Erasing Data on Printer's Hard Disk

Printer Hard Disk Operations

Printer hard disk operations are available from the following programs and interfaces.

- **Printer driver**
- **Remote UI**
- **Operation panel**

The hard disk operations available through each interface are as follows.

Operation		Printer driver	Remote UI	Operation panel
Saving print jobs	Save in mail box	✓	-	-
	Do not save print jobs in the common box	-	-	✓
	Save print jobs sent from sources other than the printer driver	-	-	✓
Operations with saved jobs	Print saved jobs	-	✓	✓
	Delete saved jobs	-	✓	✓
Job queue management	Display job queue	-	✓	✓
	Delete	-	✓	✓
	Preempt jobs	-	✓	✓
	Operations with held jobs	-	✓	✓
Mail box management	Move saved jobs	-	✓	-
	Modify saved jobs	-	✓	-
	Modify mail boxes	-	✓	-
	Print a list of saved jobs	-	-	✓
	Display a list of saved jobs	-	✓	✓
Other operations	Display free hard disk space	-	✓	✓
	Initialize hard disk	-	-	✓
	Display the time of printing	-	✓	✓
Display error messages		-	✓	✓

Checking Free Hard Disk Space

Check the space available on the printer's hard disk as follows.

This operation is available using the operation panel or Remote UI.

- Using Operation Panel
- Using Remote UI

Using Operation Panel

1. Make sure printer is turned on.

2. Flick HOME screen and tap **Printer information**.

   - Menu Operations

3. Tap **Hard disk information**.

   The free hard disk space appears.

Using Remote UI

1. Display printer status on web browser.

2. On **Menu** page, select **Job management**.

3. Select **Hard disk information**.

   The free hard disk space is shown in the upper-right corner.

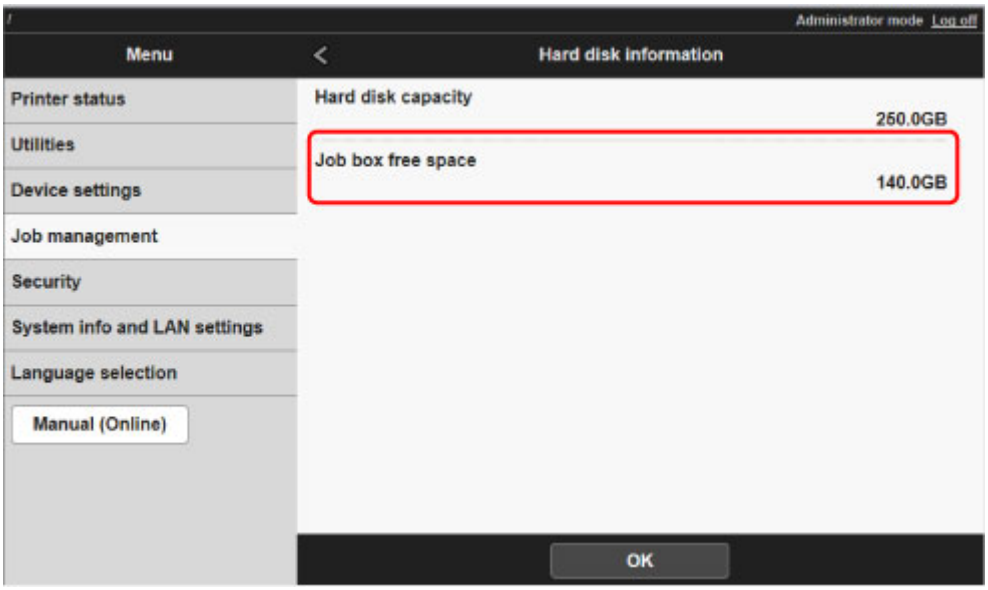

Erasing Data on Printer's Hard Disk

Important

- The administrator password is required to change settings if it is enabled for changing settings using the operation panel.
- For a more secure method of preventing data recovery, we recommend physically or magnetically destroying the hard disk. In this case, the hard disk can no longer be used.
- You cannot erase HDD data if there is a job queue. Additionally, print jobs are not processed while data erasing is in progress.

1. Make sure printer is turned on.

2. Flick HOME screen and tap **Device settings**.

   Menu Operations

3. Tap **Hard disk settings**.

4. Enter administrator password if it is enabled.

5. Tap erasing method.

   Fast

   Erases file management data for print job data stored on the printer's hard disk. Choose this method for relatively fast erasure. Because only the file management data is erased, the print job data itself is not erased. Note that it may be possible to read this data using commercial data recovery software.

   Fast secure

   Overwrites the entire hard disk with random data. No verification is performed to check if the data was correctly written. Choose this method to erase highly confidential data. Note that it may be possible to read the overwritten data using specialized data recovery tools.

   Secure

   Overwrites the entire hard disk with 00, FF, and random data (one time each). Verification is performed to check if the data was correctly written. Choose this method to erase especially confidential data. It is virtually impossible to recover the overwritten data. Conforms to the DoD5220.22-M standard of the U.S. Department of Defense.

6. Check the message that is displayed and tap **Yes**.

   Data on the hard disk are erased.

Optional accessories

- Roll Holder Set
- Stand
- Stand Parts
- Parts of the Basket
- Roll unit
- Parts of the Roll Unit

Roll Holder Set

Load roll paper on the roll holder and then load the holder in the printer. You can use the Roll Holder in the RH2-27 roll holder set with both 2-inch and 3-inch paper cores. However, if using 3-inch core roll paper, attach the 3-Inch Paper Core Attachment. (See "Loading Rolls on the Roll Holder.").

- Roll Holder Set RH2-27
  - Roll Holder (for 2- and 3-inch paper cores)

  - 3-Inch Paper Core Attachment (×2)

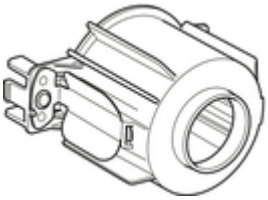

Stand

The following Stand can be used with the printer.

- Printer Stand SD-21

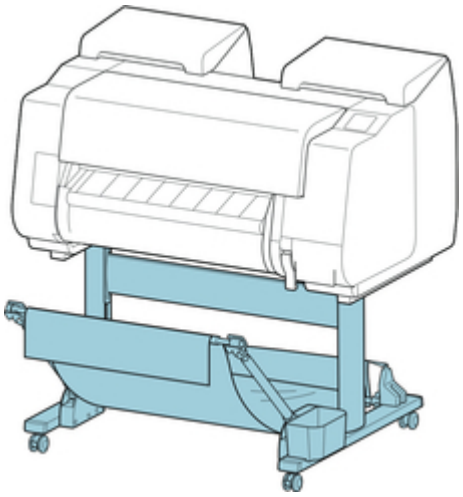

For more information on the main parts of the Stand, see "Stand Parts."

Important

- When moving the Stand, be sure to set the locking caster lock to the OFF position to release the lock.

  If you move it while the locking caster are locked, the floor may become scratched.

Note

- For instructions on installing the Stand, see the Setup Guide provided with the Stand.

Stand Parts

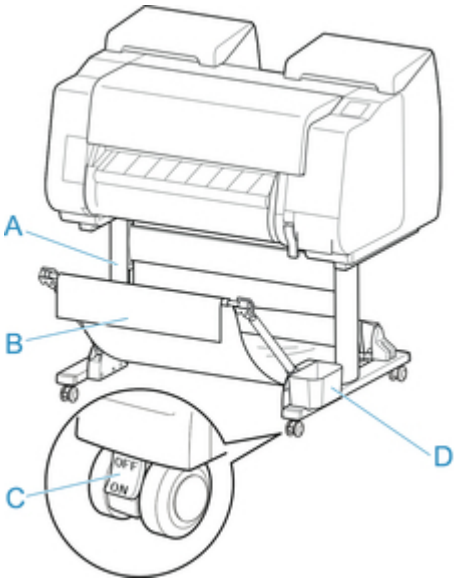

A. Stand Unit
A stand that holds the printer. Equipped with casters to facilitate moving the printer.

B. Basket
Catches the ejected printed documents. (See "Parts of the Basket.")

For instructions on how to use the basket, see "Using the Basket" and "Example Basket Configurations".

C. Locking Caster
A locking caster that, when the lock is in the ON position, immobilizes the printer.

When moving the Stand, be sure to set the locking caster lock to the OFF position to release the lock.

If you move it while the locking caster are locked, the floor may become scratched.

D. Accessory Pocket
Store printer manuals, assembly tools, and other items in this pocket.

Roll Unit

You can use the following roll unit with this printer.

- roll unit RU-21

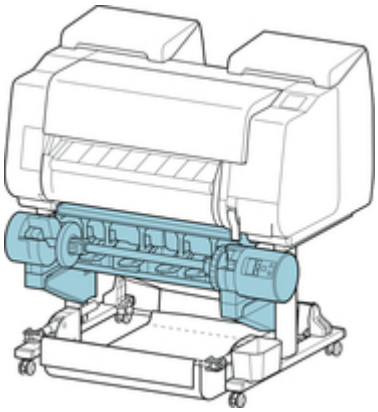

For details on the main parts of the roll unit, see "Parts of the Roll Unit."

Note

- For instructions on installing the roll unit, see the documentation provided with the roll unit.

Network Setting

- **Network Connection Tips**
  - Default Network Settings
  - Another Printer Found with Same Name
  - Connecting to Another Computer via LAN/Changing from USB to LAN Connection
  - Printing Network Settings
  - Changing LAN Connection Method/Changing Wireless LAN Connection Method (Windows)
  - Changing Network Settings Using Remote UI
- **IJ Network Device Setup Utility**
  - IJ Network Device Setup Utility
  - Starting Up IJ Network Device Setup Utility
  - IJ Network Device Setup Utility Screen
  - Performing Network Settings
  - Checking Network Status
  - IJ Network Device Setup Utility Menus
  - Other Network Information
- **Sharing the Printer on a Network (Windows)**
  - Setting Up a Shared Printer
  - Restrictions on Printer Sharing
- **Sharing the Printer on a Network (Mac OS)**
  - Settings on Print Server
  - Settings on Client PC
  - Restrictions on Printer Sharing
- **Connecting Smartphone/Tablet to Printer via Wireless LAN**
  - Connecting Smartphone/Tablet to Printer via Wireless LAN Router

Network Connection Tips

- Default Network Settings
- Another Printer Found with Same Name
- Connecting to Another Computer via LAN/Changing from USB to LAN Connection
- Printing Network Settings
- Changing LAN Connection Method/Changing Wireless LAN Connection Method (Windows)
- Changing Network Settings Using Remote UI

Default Network Settings

LAN Connection Defaults

Item	Default
Change LAN	**Activate wired LAN**
SSID	BJNPSETUP
Communication mode	**Infrastructure**
Wireless LAN security	**Disable**
IP address (**IPv4**)	**Auto setup**
IP address (**IPv6**)	**Auto setup**
Set printer name*	XXXXXXXXXXXX
Enable/disable IPv6	**Enable**
Enable/disable WSD	**Enable**
Timeout setting	**1 minute**
Enable/disable Bonjour	**Enable**
Service name	Canon PRO-2000
LPR protocol setting	**Enable**
Wireless LAN DRX setting	**Enable**
Wired LAN DRX setting	**Enable**

("XX" represents alphanumeric characters.)

* Default value depends on printer. To check value, use operation panel.

LAN settings

Direct Connection Defaults

Item	Default
SSID (Identifier for direct connection)	DIRECT-abXX-PRO-2000 *1
Password	YYYYYYYYYY *2
Wireless LAN security	**WPA2-PSK (AES)**
Direct connection device name	ZZZZZZ-PRO-2000 *3
Connection request confirmation	Displayed

*1 "ab" is specified at random and "XX" represents last two digits of printer's MAC address.

*2 The password is specified automatically when the printer is turned on for the first time.

*3 "ZZZZZZ" represents last six digits of printer's MAC address.

Another Printer Found with Same Name

When the printer is found during setup, other printers with the same name may appear on the results screen.

Select a printer with checking the printer settings against those on detection result screen.

Check the printer's MAC address or serial to select the correct printer from the results.

Note

- Serial number may not appear on result screen.

Check the printer's MAC address and the serial number by one of the following methods.

- Display on the touch screen.

  MAC address

  LAN settings

  Serial number

  Printer information

- Print the network settings.

  Printing Network Settings

Connecting to Another Computer via LAN/Changing from USB to LAN Connection

- For Windows:
- For Mac OS:

For Windows:

To add a computer to connect to the printer on a LAN or to change from USB to LAN connection, perform setup using the Setup CD-ROM or follow the instructions on the Canon website.

For Mac OS:

To connect an additional computer to the printer via LAN, or to change from USB to LAN connection, follow the instructions on the Canon website.

Printing Network Settings

Use the operation panel to print the printer's current network settings.

Important

- The network settings printout contains important information about your network. Handle it with care.

1. Make sure printer is turned on.

2. Load plain paper.

   - Loading Rolls on the Roll Holder
   - Loading the Upper Roll on the Printer

   If you use sheets, load at least 10 sheets (A4 or Letter-sized).

   - Loading Sheets in the Printer

3. Flick HOME screen and tap **Device settings**.

   - Menu Operations

   The menu screen appears.

4. Tap **Test print**.

   If you specify the administrator password, enter the password.

5. Tap **Print LAN details**.

   The printer starts printing network settings information.

   Note

   - You can also print the printer's network settings. Tap **Device settings** on the HOME screen, tap **LAN settings** and **Confirm LAN settings** in this order, and then tap **Print LAN details** and tap **Yes**.

   The printed network settings information is as follows: (Some setting values are not displayed depending on the printer settings.)

Item	Description	Setting
LAN Setting	Basic setting information	-
Basic Info	IPv4 setting information (Wired LAN)	-
LAN Interface Mode	Current interface	Wired/Wireless/AP Mode/WFD Mode
Link Active	Operation status	Inactive/Active
IP Address	IPv4 IP address	XXX.XXX.XXX.XXX

Gateway Address	IPv4 default gateway	XXX.XXX.XXX.XXX
Subnet Mask	IPv4 subnet mask	XXX.XXX.XXX.XXX
IP Mode	Acquiring method of IPv4 IP address	Auto IP/DHCP/Manual
Use DNS Auto Mode	Acquiring DNS server automatically	On/Off
Primary DNS Server Address	Primary DNS server address	XXX.XXX.XXX.XXX
Secondary DNS Server Address	Secondary DNS server address	XXX.XXX.XXX.XXX
Control Filtering	SNMP filtering setting information	-
Use IP Filtering	Operation status of IP filtering	On/Off
IP Filtering Select	IP filtering method	Admit/Prohibit
IP Filtering Permission Address	IP filtering permission address	-
Start Address 1	Start address 1	XXX.XXX.XXX.XXX
End Address 1	End address 1	XXX.XXX.XXX.XXX
Use Single On 1	Use single on 1	On/Off
Start Address 2	Start address 2	XXX.XXX.XXX.XXX
End Address 2	End address 2	XXX.XXX.XXX.XXX
Use Single On 2	Use single on 2	On/Off
Start Address 3	Start address 3	XXX.XXX.XXX.XXX
End Address 3	End address 3	XXX.XXX.XXX.XXX
Use Single On 3	Use single on 3	On/Off
Start Address 4	Start address 4	XXX.XXX.XXX.XXX
End Address 4	End address 4	XXX.XXX.XXX.XXX
Use Single On 4	Use single on 4	On/Off
Start Address 5	Start address 5	XXX.XXX.XXX.XXX
End Address 5	End address 5	XXX.XXX.XXX.XXX
Use Single On 5	Use single on 5	On/Off
IP Filtering Prohibit Address	IP filtering prohibit address	-
Start Address 1	Start address 1	XXX.XXX.XXX.XXX
End Address 1	End address 1	XXX.XXX.XXX.XXX
Use Single On 1	Use single on 1	On/Off

Start Address 2	Start address 2	XXX.XXX.XXX.XXX
End Address 2	End address 2	XXX.XXX.XXX.XXX
Use Single On 2	Use single on 2	On/Off
Start Address 3	Start address 3	XXX.XXX.XXX.XXX
End Address 3	End address 3	XXX.XXX.XXX.XXX
Use Single On 3	Use single on 3	On/Off
Start Address 4	Start address 4	XXX.XXX.XXX.XXX
End Address 4	End address 4	XXX.XXX.XXX.XXX
Use Single On 4	Use single on 4	On/Off
LAN Setting	Basic setting information	-
Basic Info	IPv4 setting information (Wired LAN)	-
Control Filtering	SNMP filtering setting information	-
IP Filtering Prohibit Address	IP filtering prohibit address	-
Start Address 5	Start address 5	XXX.XXX.XXX.XXX
End Address 5	End address 5	XXX.XXX.XXX.XXX
Use Single On 5	Use single on 5	On/Off
Print Filtering	Print filtering setting information	-
Use IP Filtering	Operation status of IP filtering	On/Off
IP Filtering Select	IP filtering method	Admit/Prohibit
IP Filtering Permission Address	IP filtering permission address	-
Start Address 1	Start address 1	XXX.XXX.XXX.XXX
End Address 1	End address 1	XXX.XXX.XXX.XXX
Use Single On 1	Use single on 1	On/Off
Start Address 2	Start address 2	XXX.XXX.XXX.XXX
End Address 2	End address 2	XXX.XXX.XXX.XXX
Use Single On 2	Use single on 2	On/Off
Start Address 3	Start address 3	XXX.XXX.XXX.XXX
End Address 3	End address 3	XXX.XXX.XXX.XXX
Use Single On 3	Use single on 3	On/Off

Start Address 4	Start address 4	XXX.XXX.XXX.XXX
End Address 4	End address 4	XXX.XXX.XXX.XXX
Use Single On 4	Use single on 4	On/Off
Start Address 5	Start address 5	XXX.XXX.XXX.XXX
End Address 5	End address 5	XXX.XXX.XXX.XXX
Use Single On 5	Use single on 5	On/Off
IP Filtering Prohibit Address	IP filtering prohibit address	-
Start Address 1	Start address 1	XXX.XXX.XXX.XXX
End Address 1	End address 1	XXX.XXX.XXX.XXX
Use Single On 1	Use single on 1	On/Off
Start Address 2	Start address 2	XXX.XXX.XXX.XXX
End Address 2	End address 2	XXX.XXX.XXX.XXX
Use Single On 2	Use single on 2	On/Off
Start Address 3	Start address 3	XXX.XXX.XXX.XXX
End Address 3	End address 3	XXX.XXX.XXX.XXX
Use Single On 3	Use single on 3	On/Off
Start Address 4	Start address 4	XXX.XXX.XXX.XXX
End Address 4	End address 4	XXX.XXX.XXX.XXX
Use Single On 4	Use single on 4	On/Off
Start Address 5	Start address 5	XXX.XXX.XXX.XXX
End Address 5	End address 5	XXX.XXX.XXX.XXX
Use Single On 5	Use single on 5	On/Off
LAN Setting	Basic setting information	-
IPv6 Info	IPv6 setting information (Wired LAN)	-
Link Local Address	Link local address	XXXX:XXXX:XXXX:XXXX XXXX:XXXX:XXXX:XXXX
IP Address	IPv6 IP address	XXXX:XXXX:XXXX:XXXX XXXX:XXXX:XXXX:XXXX
Prefix Length	Link local address prefix length	XXX (0 to 128)

Use Manual Mode	Operation status of IPv6 manual address	On/Off
Manual Address	Manual address	-
IP Address	IPv6 IP address	XXXX:XXXX:XXXX:XXXX XXXX:XXXX:XXXX:XXXX
Prefix Length	Prefix length	XXX (0 to 128)
Use Stateful Address Mode	Operation status of stateful address mode	On/Off
Stateful Address	Stateful address	-
IP Address	IPv6 IP address	XXXX:XXXX:XXXX:XXXX XXXX:XXXX:XXXX:XXXX
Prefix Length	Prefix length	XXX (0 to 128)
Stateless Address	Stateless address	-
IP Address 1	IP address 1	XXXX:XXXX:XXXX:XXXX XXXX:XXXX:XXXX:XXXX
Prefix Length 1	Prefix length 1	XXX (0 to 128)
IP Address 2	IP address 2	XXXX:XXXX:XXXX:XXXX XXXX:XXXX:XXXX:XXXX
Prefix Length 2	Prefix length 2	XXX (0 to 128)
IP Address 3	IP address 3	XXXX:XXXX:XXXX:XXXX XXXX:XXXX:XXXX:XXXX
Prefix Length 3	Prefix length 3	XXX (0 to 128)
IP Address 4	IP address 4	XXXX:XXXX:XXXX:XXXX XXXX:XXXX:XXXX:XXXX
Prefix Length 4	Prefix length 4	XXX (0 to 128)
Gateway Address	Gateway address	-
IP Address 1	IP address 1	XXXX:XXXX:XXXX:XXXX XXXX:XXXX:XXXX:XXXX
Prefix Length 1	Prefix length 1	XXX (0 to 128)
IP Address 2	IP address 2	XXXX:XXXX:XXXX:XXXX XXXX:XXXX:XXXX:XXXX
Prefix Length 2	Prefix length 2	XXX (0 to 128)
IP Address 3	IP address 3	XXXX:XXXX:XXXX:XXXX XXXX:XXXX:XXXX:XXXX

Prefix Length 3	Prefix length 3	XXX (0 to 128)
IP Address 4	IP address 4	XXXX:XXXX:XXXX:XXXX XXXX:XXXX:XXXX:XXXX
Prefix Length 4	Prefix length 4	XXX (0 to 128)
Use DNS Auto Mode	Acquiring DNS server automatically	On/Off
Primary DNS Server Address	Primary DNS server address	XXX.XXX.XXX.XXX
Secondary DNS Server Address	Secondary DNS server address	XXX.XXX.XXX.XXX
Control Filtering	SNMP filtering setting information	-
Use IP Filtering	Operation status of IP filtering	On/Off
IP Filtering Select	IP filtering method	Admit/Prohibit
IPv6 Filtering Permission Info	IPv6 filtering permission information	-
IP Filtering Start Address 1	IP filtering start address 1	XXX.XXX.XXX.XXX
IP Filtering End Address 1	IP filtering end address 1	XXX.XXX.XXX.XXX
Use Single On 1	Use single on 1	On/Off
LAN Setting	Basic setting information	-
IPv6 Info	IPv6 setting information (Wired LAN)	-
Control Filtering	SNMP filtering setting information	-
IP Filtering Start Address 2	IP filtering start address 2	XXX.XXX.XXX.XXX
IP Filtering End Address 2	IP filtering end address 2	XXX.XXX.XXX.XXX
Use Single On 2	Use single on 2	On/Off
IP Filtering Start Address 3	IP filtering start address 3	XXX.XXX.XXX.XXX
IP Filtering End Address 3	IP filtering end address 3	XXX.XXX.XXX.XXX
Use Single On 3	Use single on 3	On/Off
IP Filtering Start Address 4	IP filtering start address 4	XXX.XXX.XXX.XXX
IP Filtering End Address 4	IP filtering end address 4	XXX.XXX.XXX.XXX
Use Single On 4	Use single on 4	On/Off
IP Filtering Start Address 5	IP filtering start address 5	XXX.XXX.XXX.XXX
IP Filtering End Address 5	IP filtering end address 5	XXX.XXX.XXX.XXX
Use Single On 5	Use single on 5	On/Off

IPv6 Filtering Prohibit Info	IPv6 Filtering prohibit information	-
IP Filtering Start Address 1	IP filtering start address 1	XXX.XXX.XXX.XXX
IP Filtering End Address 1	IP filtering end address 1	XXX.XXX.XXX.XXX
Use Single On 1	Use single on 1	On/Off
IP Filtering Start Address 2	IP filtering start address 2	XXX.XXX.XXX.XXX
IP Filtering End Address 2	IP filtering end address 2	XXX.XXX.XXX.XXX
Use Single On 2	Use single on 2	On/Off
IP Filtering Start Address 3	IP filtering start address 3	XXX.XXX.XXX.XXX
IP Filtering End Address 3	IP filtering end address 3	XXX.XXX.XXX.XXX
Use Single On 3	Use single on 3	On/Off
IP Filtering Start Address 4	IP filtering start address 4	XXX.XXX.XXX.XXX
IP Filtering End Address 4	IP filtering end address 4	XXX.XXX.XXX.XXX
Use Single On 4	Use single on 4	On/Off
IP Filtering Start Address 5	IP filtering start address 5	XXX.XXX.XXX.XXX
IP Filtering End Address 5	IP filtering end address 5	XXX.XXX.XXX.XXX
Use Single On 5	Use single on 5	On/Off
Print Filtering	Print filtering setting information	-
Use IP Filtering	Operation status of IP filtering	On/Off
IP Filtering Select	IP filtering method	Admit/Prohibit
IP Filtering Permission Info	IP filtering permission information	-
IP Filtering Start Address 1	IP filtering start address 1	XXX.XXX.XXX.XXX
IP Filtering End Address 1	IP filtering end address 1	XXX.XXX.XXX.XXX
Use Single On 1	Use single on 1	On/Off
IP Filtering Start Address 2	IP filtering start address 2	XXX.XXX.XXX.XXX
IP Filtering End Address 2	IP filtering end address 2	XXX.XXX.XXX.XXX
Use Single On 2	Use single on 2	On/Off
LAN Setting	Basic setting information	-
IPv6 Info	IPv6 setting information (Wired LAN)	-
Print Filtering	Print filtering setting information	-

IP Filtering Start Address 3	IP filtering start address 3	XXX.XXX.XXX.XXX
IP Filtering End Address 3	IP filtering end address 3	XXX.XXX.XXX.XXX
Use Single On 3	Use single on 3	On/Off
IP Filtering Start Address 4	IP filtering start address 4	XXX.XXX.XXX.XXX
IP Filtering End Address 4	IP filtering end address 4	XXX.XXX.XXX.XXX
Use Single On 4	Use single on 4	On/Off
IP Filtering Start Address 5	IP filtering start address 5	XXX.XXX.XXX.XXX
IP Filtering End Address 5	IP filtering end address 5	XXX.XXX.XXX.XXX
Use Single On 5	Use single on 5	On/Off
IPv6 Filtering Prohibit Info	IPv6 Filtering prohibit information	-
IP Filtering Start Address 1	IP filtering start address 1	XXX.XXX.XXX.XXX
IP Filtering End Address 1	IP filtering end address 1	XXX.XXX.XXX.XXX
Use Single On 1	Use single on 1	On/Off
IP Filtering Start Address 2	IP filtering start address 2	XXX.XXX.XXX.XXX
IP Filtering End Address 2	IP filtering end address 2	XXX.XXX.XXX.XXX
Use Single On 2	Use single on 2	On/Off
IP Filtering Start Address 3	IP filtering start address 3	XXX.XXX.XXX.XXX
IP Filtering End Address 3	IP filtering end address 3	XXX.XXX.XXX.XXX
Use Single On 3	Use single on 3	On/Off
IP Filtering Start Address 4	IP filtering start address 4	XXX.XXX.XXX.XXX
IP Filtering End Address 4	IP filtering end address 4	XXX.XXX.XXX.XXX
Use Single On 4	Use single on 4	On/Off
IP Filtering Start Address 5	IP filtering start address 5	XXX.XXX.XXX.XXX
IP Filtering End Address 5	IP filtering end address 5	XXX.XXX.XXX.XXX
Use Single On 5	Use single on 5	On/Off
MAC Info	MAC address setting information (Wired/Wireless LAN)	-
MAC Address(Wired)	MAC address (Wired LAN)	XX:XX:XX:XX:XX:XX
MAC Address(Wireless)	MAC address (Wireless LAN)	XX:XX:XX:XX:XX:XX

Use MAC Address Filtering	Operation status of MAC address filtering	On/Off
MAC Filtering Select	MAC address filtering method	Admit/Prohibit
MAC Filtering Permission Info	MAC filtering permission information	-
MAC Address 1	MAC address 1	XX:XX:XX:XX:XX:XX
MAC Address 2	MAC address 2	XX:XX:XX:XX:XX:XX
MAC Address 3	MAC address 3	XX:XX:XX:XX:XX:XX
MAC Address 4	MAC address 4	XX:XX:XX:XX:XX:XX
MAC Address 5	MAC address 5	XX:XX:XX:XX:XX:XX
LAN Setting	Basic setting information	-
MAC Info	MAC address setting information (Wired/Wireless LAN)	-
MAC Filtering Prohibit Info	MAC filtering prohibit information	-
MAC Address 1	MAC address 1	XX:XX:XX:XX:XX:XX
MAC Address 2	MAC address 2	XX:XX:XX:XX:XX:XX
MAC Address 3	MAC address 3	XX:XX:XX:XX:XX:XX
MAC Address 4	MAC address 4	XX:XX:XX:XX:XX:XX
MAC Address 5	MAC address 5	XX:XX:XX:XX:XX:XX
Proxy Setting	Proxy server setting information	-
Use Proxy	Use proxy server	On/Off
Proxy Server Address	Proxy server address	XXXXXXXXXXXXXXXX (up to 128 characters)
Proxy Port Number	Proxy port specification	1 to 65535
Use User Authority Mode	Use user authority mode	On/Off
Proxy Server User Name	Proxy server user name	XXXXXXXXXXXXXXXX (up to 64 characters)
Proxy Server Password	Proxy server password	XXXXXXXXXXXXXXXX (up to 64 characters)
Wireless LAN Setting	Wireless LAN setting information	-
Channel	Channel (infrastructure)	XXX (0 to 255)

SSID	SSID	Wireless LAN (infrastructure) SSID (up to 32 characters)
Security Type	Security type for Wireless LAN (infrastructure)	Disabled/WEP 64bit/WEP 128bit/WPA PSK TKIP/WPA PSK AES/WPA2 PSK TKIP/WPA2 PSK AES/MIXED
WEP1	WEP key 1 for Wireless LAN (infrastructure)	XXXXXXXX (up to 32 characters)
WEP2	WEP key 2 for Wireless LAN (infrastructure)	XXXXXXXX (up to 32 characters)
WEP3	WEP key 3 for Wireless LAN (infrastructure)	XXXXXXXX (up to 32 characters)
WEP4	WEP key 4 for Wireless LAN (infrastructure)	XXXXXXXX (up to 32 characters)
WEP Certificate	WEP certificate for Wireless LAN (infrastructure)	Open/Shared/Auto
WEP Format	WEP format for Wireless LAN (infrastructure)	Hex/String
WPA PSK	Passphrase for Wireless LAN (infrastructure)	XXXXXXXX (up to 64 characters)
P2P LAN Setting	P2P LAN setting information	-
Channel	Channel (P2P)	XXX (0 to 255)
SSID	SSID	Wireless LAN SSID (P2P)
Security Type	Security type for Wireless LAN (P2P) (up to 32 characters)	Disabled/WPA2 PSK TKIP/WPA2 PSK AES
WPA PSK	Passphrase for Wireless LAN (P2P)	XXXXXXXXXX (up to 10 characters)
WFD LAN Setting	WFD LAN setting information	-
Device Name	Device name	XXXXXXXX (up to 32 characters)
Channel	Channel (WFD)	XXX (0 to 255)
SSID	SSID	Wireless LAN SSID (WFD) (up to 32 characters)
Security Type	Security type for Wireless LAN (P2P)	Disabled/WPA2 PSK TKIP/WPA2 PSK AES
WPA PSK	Passphrase for Wireless LAN (P2P)	XXXXXXXXXX (up to 10 characters)
Use Notify Connection	Use notify connection	On/Off

Protocol Setting	Protocol setting information	-
Printer Name	Printer name	XXXXXXXX (up to 16 characters)
Use LPR	Use LPR	On/Off
Printer Location	Printer location	XXXXXXXX (up to 16 characters)
Use Wired Power Save	Discontinuous reception (Wired LAN)	On/Off
Use Wireless Power Save	Discontinuous reception (Wireless LAN)	On/Off
Use RAW	Use RAW	On/Off
Use LLMNR	Use LLMNR	On/Off
Use Spanning Tree	Use spanning tree	On/Off
WSD Setting	WSD setting information	-
Use WSD	Use WSD	On/Off
WSD Timeout	Timeout	1/5/10/15/20 [min]
Use WSD Push Scan	Use WSD push scan	On/Off
Use WSD Rx Optimization	Use WSD reception optimization	On/Off
SNMP Setting	SNMP setting information	-
Use SNMPv1	Use SNMPv1	On/Off
Use SNMPv3	Use SNMPv3	On/Off
SNMP Community Name1	SNMP community name 1	XXXXXXXX (up to 32 characters)
SNMP Community Name2	SNMP community name 2	XXXXXXXX (up to 32 characters)
SNMP Extra Access Authority	SNMP extra access authority	Read Only/Read Write
SNMP Access Authority1	SNMP access authority 1	Read Only/Read Write
SNMP Access Authority2	SNMP access authority 2	Read Only/Read Write
SNMPV3 Setting	SNMPV3 setting information	-
User1	User 1	-
User Name	User name	XXXXXXXX (up to 32 characters)
Use SNMPv3	Use SNMPv3	On/Off
MIB Access Restriction	MIB access restriction	Read Only/Read Write
Security Setting	Security setting	No Auth No Encrypt/Auth No Encrypt/Auto Encrypt

Authority Algorithm	Authority algorithm	None/MD5/SHA1
Authority Password	Authority password	XXXXXXXX (0 to 16 characters)
Encryption Algorithm	Encryption algorithm	None/AES/DES
Encryption Password	Encryption password	XXXXXXXX (0 to 16 characters)
User2	User 2	-
User Name	User name	XXXXXXXX (up to 32 characters)
Use SNMPv3	Use SNMPv3	On/Off
MIB Access Restriction	MIB access restriction	Read Only/Read Write
Security Setting	Security setting	No Auth No Encrypt/Auth No Encrypt/Auto Encrypt
Authority Algorithm	Authority algorithm	None/MD5/SHA1
Authority Password	Authority password	XXXXXXXX (0 to 16 characters)
Encryption Algorithm	Encryption algorithm	None/AES/DES
Encryption Password	Encryption password	XXXXXXXX (0 to 16 characters)
SNMPV3 Setting	SNMPV3 setting information	-
User3	User 3	-
User Name	User name	XXXXXXXX (up to 32 characters)
Use SNMPv3	Use SNMPv3	On/Off
MIB Access Restriction	MIB access restriction	Read Only/Read Write
Security Setting	Security setting	No Auth No Encrypt/Auth No Encrypt/Auto Encrypt
Authority Algorithm	Authority algorithm	None/MD5/SHA1
Authority Password	Authority password	XXXXXXXX (0 to 16 characters)
Encryption Algorithm	Encryption algorithm	None/AES/DES
Encryption Password	Encryption password	XXXXXXXX (0 to 16 characters)
User4	User 4	-
User Name	User name	XXXXXXXX (up to 32 characters)
Use SNMPv3	Use SNMPv3	On/Off
MIB Access Restriction	MIB access restriction	Read Only/Read Write

Security Setting	Security setting	No Auth No Encrypt/Auth No Encrypt/Auto Encrypt
Authority Algorithm	Authority algorithm	None/MD5/SHA1
Authority Password	Authority password	XXXXXXXX (0 to 16 characters)
Encryption Algorithm	Encryption algorithm	None/AES/DES
Encryption Password	Encryption password	XXXXXXXX (0 to 16 characters)
User5	User 5	-
User Name	User name	XXXXXXXX (up to 32 characters)
Use SNMPv3	Use SNMPv3	On/Off
MIB Access Restriction	MIB access restriction	Read Only/Read Write
Security Setting	Security setting	No Auth No Encrypt/Auth No Encrypt/Auto Encrypt
Authority Algorithm	Authority algorithm	None/MD5/SHA1
Authority Password	Authority password	XXXXXXXX (0 to 16 characters)
Encryption Algorithm	Encryption algorithm	None/AES/DES
Encryption Password	Encryption password	XXXXXXXX (0 to 16 characters)
SNTP Setting	SNTP setting information	-
Use SNTP	Use SNTP	On/Off
SNTP Polling Interval	SNTP polling interval	1 to 48 [sec]
SNTP Server Name	SNTP server name	XXXXXXXX (up to 256 characters)
FTP Setting	FTP setting information	-
Use FTP	Use FTP	On/Off
Use FTP Authority	Use FTP authority	On/Off
FTP User Name	FTP user name	XXXXXXXX (up to 33 characters)
FTP Password	FTP password	XXXXXXXX (up to 33 characters)
Bonjour Setting	Bonjour setting information	-
Use Bonjour	Use Bonjour	On/Off
Bonjour Service Name	Bonjour service name	Bonjour service name (Up to 50 alphanumeric characters)
802.1X Setting	802.1X setting information	-

Authority State	802.1X authority state	Invalid/Authorized
Authority Type	Enable/disable 802.1X and authority type	Off/On/EAP-TTLS
EAP TTLS Type	Internal authority type for EAP-TTLS	Invalid/Authorized
Weak Encryption Restriction	Weak encryption restriction	Invalid/Authorized
Weak Certificate Restriction	Weak certificate restriction	Invalid/Authorized
Login Name	Login name	XXXXXXXX (up to 24 characters)
User Name	User name	XXXXXXXX (up to 24 characters)
Password	Password	XXXXXXXX (up to 24 characters)
Server Name	Server name	XXXXXXXX (up to 43 characters)
IPsec Setting	IPsec setting information	-
Use IPsec	Use IPsec	On/Off
Previous Shared Key	Previous shared key for IPsec	XXXXXXXX (up to 17 characters)
Phase2 Protocol	IPsec phase2 protocol	AH/ESP/AH+ESP
AAP Location Info	AAP location information	-
Height	Height	0 to 65535
Latitude Info	Latitude information	-
Direction	Direction	South Latitude/North Latitude
Time	Time	0 to 90
Minute	Minute	0 to 59
Sec1	Sec 1	0 to 59
Sec2	Sec 2	0 to 999
Longitude Info	Longitude information	-
Direction	Direction	South Latitude/North Latitude
Time	Time	0 to 90
Minute	Minute	0 to 59
Sec1	Sec 1	0 to 59
Sec2	Sec 2	0 to 999
Email Setting	E-mail setting information	-

Retry Count	E-mail retry count	0 to 5
Retry Interval	E-mail retry interval	1 to 60 (min)
Use Email Notification	Use E-mail notification	On/Off
Use SSL	Use SSL	On/Off
Use SSL Cert No Check	Use SSL certification	On/Off
Use Mailbox Delete	Use mailbox delete	On/Off
Email Setting	E-mail setting information	-
SMTP Server Address	SMTP server address	XXXXXXXX (up to 64 characters)
SMTP Server Port No	SMTP server port number	1 to 65535
SMTP State	SMTP state	Invalid/Authorized/POP before SMTP
From Address 1	From address 1	XXXXXXXX (up to 128 characters)
To Address 1	To address 1	XXXXXXXX (up to 128 characters)
Reply Address 1	Reply address 1	XXXXXXXX (up to 128 characters)
Notice Conditions 1	Notice conditions 1	-
Job End	Job end	On/Off
Error Occurred	Error occurred	On/Off
Warning Occurred	Warning occurred	On/Off
Signature 1	Signature 1	XXXXXXXX (up to 128 characters)
To Address 2	To address 2	XXXXXXXX (up to 128 characters)
Reply Address 2	Reply address 2	XXXXXXXX (up to 128 characters)
Notice Conditions 2	Notice conditions 2	-
Job End	Job end	On/Off
Error Occurred	Error occurred	On/Off
Warning Occurred	Warning occurred	On/Off
Signature 2	Signature 2	XXXXXXXX (up to 128 characters)
RUI Setting	RUI setting information	-
Use RUI	Use Remote UI	On/Off
Language	Language	-

("XX" represents alphanumeric characters.)

Changing LAN Connection Method/Changing Wireless LAN Connection Method (Windows)

- Changing LAN Connection Method
- Changing Wireless LAN Connection Method

Changing LAN Connection Method

Follow either procedure below to change LAN connection method (wired or wireless).

- **For Windows:**
  - Use the Setup CD-ROM or follow the instructions on the Canon website to redo setup.
  - Tap **LAN settings** and **Change LAN** in this order on the HOME screen, and then select **Activate wireless LAN** or **Activate wired LAN**.

    After that, perform settings on the **Protocol Settings...** screen on IJ Network Device Setup Utility.

    For details, refer to Performing/Changing Wireless LAN Settings or Performing/Changing Wired LAN Settings.
- **For Mac OS:**

  Follow the instructions on the Canon website to redo setup.

Changing Wireless LAN Connection Method

Follow either procedure below to change wireless LAN connection method (infrastructure or direct connection).

- **For Windows:**
  - Use the Setup CD-ROM or follow the instructions on the Canon website to redo setup.
  - Perform settings on the **Protocol Settings** screen on IJ Network Device Setup Utility.

Important

- Before you perform settings using IJ Network Device Setup Utility, turn on cableless setup mode on the printer following the procedure below.
  1. Make sure printer is turned on.
  2. Flick HOME screen and tap **LAN settings**.

     Menu Operations

     If you specify the administrator password, enter the password.
  3. Tap **Wireless LAN setup**.
  4. Tap **Cableless setup**.
  5. Check message and tap **OK**.

     Follow instructions on your smartphone or tablet.
  6. If message saying setup is completed appears, tap **OK**.

- **For Mac OS:**

  Follow the instructions on the Canon website to redo setup.

Changing Network Settings Using Remote UI

You can use Remote UI on the following OS and the web browser.

- iOS device

  OS: iOS 7.0 or later

  Web browser: iOS standard Web browser (Mobile Safari)

- Android device

  OS: Android 4.0 or later

  Web browser: Android standard Web browser (Browser or Chrome)

- Mac OS device

  OS: Mac OS X v.10.6 or later

  Web browser: Safari 5.1 or later

- Windows device

  OS: Windows Vista SP2 or later

  Web browser: Internet Explorer 9 or later, Google Chrome 41.0.2272.118m or later, Mozilla Firefox 37.0.1 or later

Important

- Enable JavaScript and cookies in the web browser.
- If you access Remote UI with the printer name instead of its IP address, make sure the DNS settings are correctly configured.
- Depending on the network environment, you may not be able to start Remote UI.
- Make sure **Do not restrict** is selected for **Remote UI** on **Operation restrictions** in **Device user settings** under **Device settings**.

Note

- Remote UI also offers many other features. You can display the ink levels, check error messages and other status information, and cancel print jobs.

Sharing the Printer on a Network (Mac OS)

When multiple computers are being used in the network environment, you can share the printer connected to one computer with the other computers.

Before carrying out the setup for printer sharing, select **Network** from **System Preferences**, and check whether the network settings have been set.

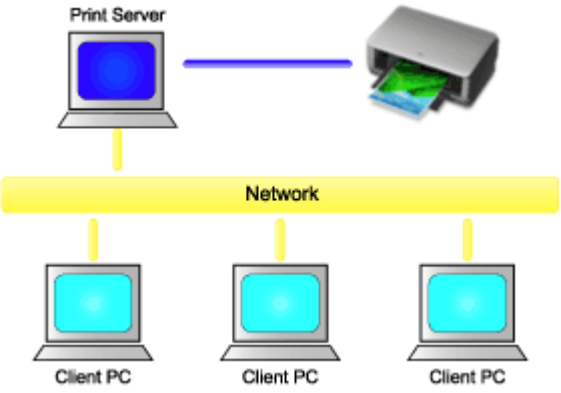

This section describes the procedure for sharing a printer among Mac.

- Settings on Print Server

  This section describes how to set up a computer that connects with this printer.
- Settings on Client PC

  This section describes the procedure for setting a computer that uses this printer though a network. When you execute print, the data is sent to the printer through the print server system.

Related Topic

- Restrictions on Printer Sharing

Settings on Print Server

When you use the printer on a network, set up the printer driver for sharing on the print server system.

The procedure for setting up the print server systems is as follows:

1. Install the printer driver on the print server system

2. Check that the printer to be used has been added

   Open **System Preferences**, and select **Printers & Scanners** (**Print & Scan**).
   The printer list displays the printers that are connected to the computer.

3. Set sharing

   Check the **Share this printer on the network** check box.

Note

- Depending on the environment you are using, a message prompting you to restart the computer may be displayed. To complete the installation properly, restart the computer.

The setup on the print server system is complete. Next, set up the client systems.

Settings on Client PC

After setting up the print server system, set up the client system.

The procedure for setting up the client systems is as follows:

1. Install the printer driver on the client systems

2. Display the printer list

   Open **System Preferences**, and select **Printers & Scanners** (**Print & Scan**).
   Click **+** to display the printer list.

3. Add a printer to be shared

   Select a shared printer displayed in the printer list, and then click **Add**.

The setup on the client systems is now completed.

Note

- The print procedures are the same as when the computer is connected directly to the printer with a USB cable.
  At the Page Setup dialog, select the printer that is connected to the print server to be used.

Restrictions on Printer Sharing

These are restrictions that apply when you are using a printer in a network environment.

- Install the same version of the printer driver in the print server system and the client systems. You can download the latest printer driver from our web site.
- Use printer sharing with users who have the administrator privilege.
- Depending on how the computer is connected with the printer, the computer may not be able to access the function information that was set on the printer and display the correct settings.
- Media information on the printer driver cannot be changed when using a client machine.
- When printing from the client, the following functions cannot be used.
  - Canon imagePROGRAF Preview
  - Canon imagePROGRAF Free Layout
- When using on the client side, it is not possible to change the roll paper unit option settings.

Connecting Smartphone/Tablet to Printer via Wireless LAN

- **To connect a smartphone or tablet to printer via a wireless LAN router:**

  Connecting Smartphone/Tablet to Printer via Wireless LAN Router

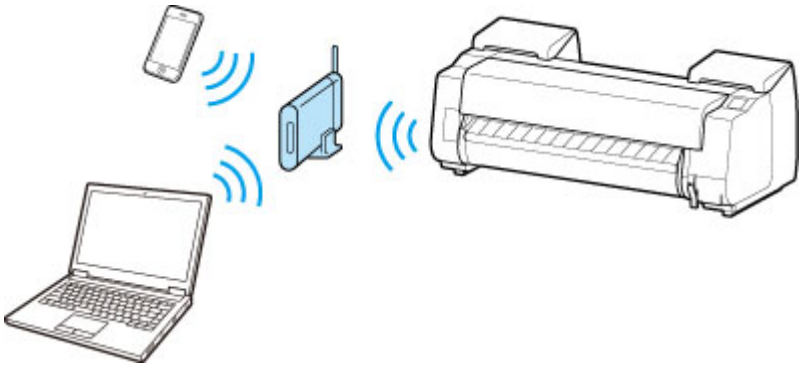

- **To connect a smartphone or tablet to printer without a wireless LAN router:**

  Connecting Smartphone/Tablet to Printer Directly via Wireless LAN (Direct Connection)

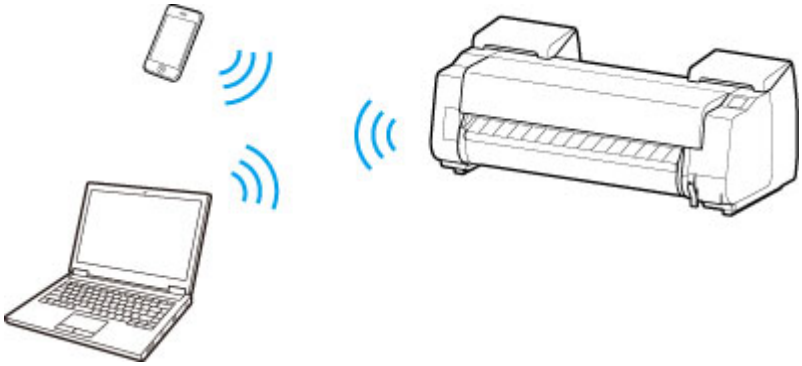

Connecting Smartphone/Tablet to Printer via Wireless LAN Router

You can connect devices (e.g. smartphone, or tablet) to the printer by two methods below.

- Wireless connection (connecting devices via a wireless router)
- Direct wireless connection (connecting devices using direct connection)

This section describes connection via a wireless LAN router.

Follow the procedure below to connect via a wireless router.

1. Check printer LAN setting.
2. Connect smartphone/tablet to printer.

Important

- The administrator password is required to change settings if it is enabled for changing settings using the operation panel.
- Check the usage restrictions and change the printer LAN setting.

  Restrictions

Checking Printer LAN Setting

Make sure the icon is displayed on the upper right on the HOME screen.

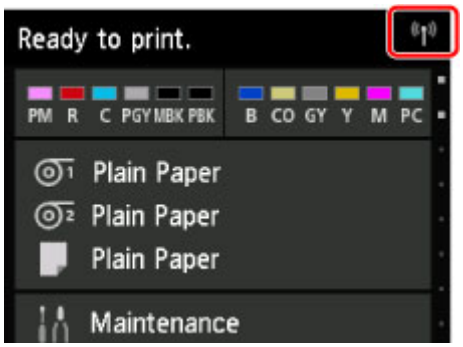

If the icon is not displayed, follow the procedure below to enable wireless LAN and to connect the printer to the wireless router.

1. Flick HOME screen and tap **LAN settings**.

   Menu Operations

2. Tap **Change LAN**.

3. Tap **Activate wireless LAN**.

   The printer wireless LAN is enabled and you can connect the wireless LAN you connected previously.

Connecting Smartphone/Tablet to Printer

For Android device

■ For iOS device

- For Android device
  1. Open "Settings" menu on your device.
  2. Enable "Wi-Fi".
  3. Select wireless router SSID you use from detected device list.

  4. Enter wireless LAN router password.

     Your device is connected to the printer.
  5. Start printing from application.

- For iOS device
  1. Open "Settings" menu on your device.
  2. Enable "Wi-Fi".
  3. Select wireless router SSID you use from detected device list.

  4. Enter wireless LAN router password.

     Your device is connected to the printer.
  5. Start printing from application.

Adjustments for Better Print Quality

- **Adjusting the Print Head**
  - Adjusting the Print Head
  - Troubleshooting Paper Abrasion and Blurry Images
- **Adjusting Feed Amount**
  - Adjusting Feed Amount
  - Adjusting Vacuum Strength

Adjusting the Print Head

➡ Adjusting the Print Head

➡ Troubleshooting Paper Abrasion and Blurry Images

Adjusting the Print Head

If printed documents are affected by the following problems, try adjusting the print head.

- Printing is faint or affected by banding in different colors

  Execute **Print nozzle check pattern** in the touch screen menu to check for print head nozzle clogging.

  For instructions, see "Checking for Nozzle Clogging."

- Printed vertical lines are warped or colors are out of alignment

  Execute **Print head alignment** in the touch screen menu to adjust the print head alignment.

  Normally, execute **Auto (standard)** or **Auto (fine)**. However, when printing on special paper or if printing is not improved after **Auto (fine)**, try **Manual**.

  ➡ Automatic Adjustment to Straighten Lines and Colors

  ➡ Manual Adjustment to Straighten Lines and Colors

- Paper rubs against the print head, or image edges are blurred

  Setting **Paper Thickness (Head Height)** in the touch screen menu and changing the height of the print head may improve the situation.

  ➡ Troubleshooting Paper Abrasion and Blurry Images

Automatic Adjustment to Straighten Lines and Colors

If printed vertical lines are warped or colors are out of alignment, execute **Print head alignment** and adjust the print head alignment.

Choose from **Auto (standard)** or **Auto (fine)** for automatically adjusting the print head.

Minor warping and misaligned colors can usually be improved by executing **Auto (standard)**. If there is no improvement, perform **Auto (fine)**.

When you execute **Auto (standard)** or **Auto (fine)**, the adjustment pattern is printed, and the print head position is adjusted based on the printing result automatically.

Important

- This function is not available with Tracing Paper, Translucent Matte Film, or Clear Film.
- If adjustment is not possible as expected using special paper, try another type of paper or try **Manual** adjustment.

  Manual Adjustment to Straighten Lines and Colors

Note

- Because the results of adjustment vary depending on the type of paper used for adjustment, use the same type of paper as you will use for printing.
- To change the paper type or for more beautiful color borders, perform **Auto (standard)**.
- To ensure clear quality and when replacing the print head, perform **Auto (fine)** to fine-tune the position between nozzles and colors.

  To ensure high-quality printing, we recommend that you execute **Auto (fine)**.

Items to Prepare

When Using Rolls	An unused roll at least 10.00 in (254.0 mm) wide
When Using Sheets	**Auto (standard)**: Three sheets of unused paper, A4/Letter size or larger (or one sheet when using A2 or larger) **Auto (fine)**: Five sheets of unused paper, A4/Letter size or larger (or one sheet when using A2 or larger)

Perform adjustment as follows.

1. Load paper.

   Loading Rolls on the Roll Holder

➡ Loading the Upper Roll on the Printer

➡ Loading the Lower Roll on the Roll Unit (Option)

➡ Loading Sheets in the Printer

Important

- Always make sure the loaded paper matches the type of paper specified on the printer. Adjustment cannot be completed correctly unless the loaded paper matches the settings.

2. Flick Home screen and tap **Maintenance**.

   ➡ Touch Screen

   The **Maintenance** screen appears.

3. Tap **Print head alignment**.

4. Select and tap **Auto (standard)** or **Auto (fine)**.

   A confirmation message appears.

5. Tap **Yes**.

   The paper source setting screen appears.

6. Select and tap paper source with loaded paper.

   A test pattern is printed for adjustment.

   Adjustment is now finished if you have printed on a roll or a sheet of A2 size or larger.

7. If you are printing on sheets smaller than A2 size, a confirmation message is shown on the touch screen requesting that you continue printing.

   Tap **OK** and follow the instructions on the touch screen.

Manual Adjustment to Straighten Lines and Colors

If printed vertical lines are warped or colors are out of alignment, execute **Print head alignment** and adjust the print head alignment.

Normally, execute **Auto (standard)**.

➡ Automatic Adjustment to Straighten Lines and Colors

However, when printing on special paper or if printing is not improved after **Auto (fine)**, try **Manual**.

Manual adjustment requires you to examine the printed test pattern and enter an adjustment value.

Note

- We recommend using the type of paper you use most often for adjustment.

Items to Prepare

When Using Rolls	An unused roll at least 10.00 in (254.0 mm) wide
When Using Sheets	Three sheets of unused paper, A4/Letter size or larger (or one sheet when using A2 or larger)

Perform adjustment as follows.

1. Load paper.

   ➡ Loading Rolls on the Roll Holder
   ➡ Loading the Upper Roll on the Printer
   ➡ Loading the Lower Roll on the Roll Unit (Option)
   ➡ Loading Sheets in the Printer

   Important

   - Always make sure the loaded paper matches the type of paper specified on the printer. Adjustment cannot be completed correctly unless the loaded paper matches the settings.

2. Flick Home screen and tap **Maintenance**.

   ➡ Touch Screen

   The **Maintenance** screen appears.

3. Tap **Print head alignment**.

4. Tap **Manual**.

A confirmation message appears.

Note

- If you do not execute **Auto (fine)**, a confirmation message prompting you to execute **Auto (fine)** appears.

  In this case, tap **Yes** and execute **Auto (fine)**.

5. Tap **Yes**.

   The paper source setting screen appears.

6. Select and tap paper source with loaded paper.

   A test pattern is printed for adjustment.

7. Tap **D-1**.

8. Examine adjustment test pattern D-1 and determine the number with straight lines.

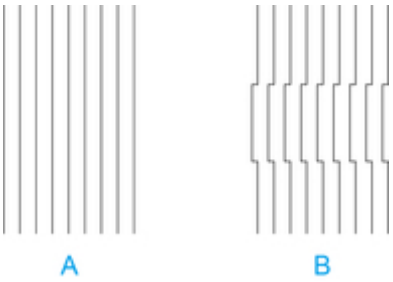

   A. Example with straight lines

   B. Example with misaligned lines

Note

- If two patterns seem equally good and you cannot decide which one is better, choose an intermediate value.

  For example, choose 11 if you cannot decide whether pattern 10 or 12 is better.

9. Tap confirmed number.

10. Repeat steps 7–9 to specify adjustment value for **D-2** to **D-35**.

    Note that **D-6**, **D-12**, **D-18**, **D-24**, and **D-30** cannot be configured.

11. Tap **OK**.

    The adjustment value is now registered, and adjustment is complete.

Troubleshooting Paper Abrasion and Blurry Images

The print head height setting affects printing quality.

Specifying a low print head height makes images clearer and enhances printing quality but may cause paper to rub against the print head.

On the other hand, specifying a high print head height will prevent paper from rubbing against the print head but may reduce the printing quality.

Important

- Paper rubbing against or becoming caught on the print head may jam or result in printed documents that are soiled.

Note

- Raise or lower print head, depending on nature of the problem.
  - Paper rubs against the printhead
  - The edges of the paper are dirty
  - Image edges are blurred or white banding occurs

1. Tap paper setting display area on Home screen.

   Touch Screen

   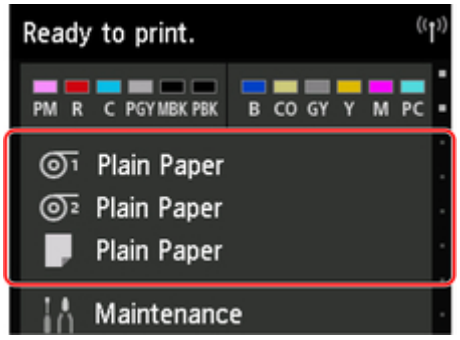

   The **Paper settings** screen appears.

2. Select paper source for setting height of print head and tap **Paper settings**.

   The **Paper settings** screen appears.

3. Tap **Advanced**.

   The **Advanced paper settings** screen appears.

4. Tap **Paper Thickness (Head Height)**.

5. Select and tap setting value.

Note

- Using **Auto** will ensure that the printer adjusts the print head height to the optimal level before printing corresponding to the ambient temperature and humidity, and displays the setting value selected for the previous print job in **Values applied with auto settings**.

  ➡ Printer information

- When a setting other than **Auto** is used, that value will always be applied.
- Depending on the type of paper, some setting values may not be available.

Adjusting Feed Amount

- Adjusting Feed Amount
- Adjusting Vacuum Strength

Adjusting Feed Amount

- Selecting Feed Amount Adjustment Method
- Automatic Banding Adjustment
- Manual Banding Adjustment
- Fine-Tuning Paper Feed Amount
- Adjusting Line Length

Selecting Feed Amount Adjustment Method

There are two methods of adjusting the paper feed amount, **Prioritize print quality** and **Prioritize length accuracy**, either of which will be applied during printing.

Since the method that is applied during printing is determined from the value of the **Set priority** setting, configure **Set priority** to match the print target.

Follow the procedure below to perform settings.

1. Load paper.

   - Loading Rolls on the Roll Holder
   - Loading the Upper Roll on the Printer
   - Loading Sheets in the Printer

2. Flick HOME screen and tap **Maintenance**.

   - Menu Operations

3. Tap **Paper feed adjustment**.

4. Tap **Set priority**.

5. Tap paper to adjust.

6. Tap setting.

   Prioritize print quality
   Adjusts the feed amount to reduce banding across the sheet in printed documents. **Adjust print quality** settings are applied. When **Paper feed fine adjustment** is executed, the **Paper feed fine adjustment** settings are applied in addition to the **Adjust print quality** settings.

   Prioritize length accuracy
   Adjusts the feed amount for better accuracy of lines in printed documents.

   Auto
   Prioritize print quality or **Prioritize length accuracy** is selected, depending on the setting as selected in the printer driver at the time of printing.

7. Tap **OK** on displayed screen.

Automatic Banding Adjustment

If printed images are affected by banding in different colors across the sheet, execute **Adjust print quality** for automatic adjustment of the paper feed amount.

The printer prints and reads a test pattern for automatic adjustment of the feed amount.

Important

- When using highly transparent media, use manual adjustment.

  Manual Banding Adjustment

Note

- We recommend executing the adjustment if you have changed the paper type or paper size.
- Always check the **Set priority** values.

  Selecting Feed Amount Adjustment Method

- If additional fine-tuning is necessary, execute **Paper feed fine adjustment**.

  Fine-Tuning Paper Feed Amount

- Use **Adjust feed length** to ensure that lines in CAD drawings are printed at exactly the right length.

  Adjusting Line Length

- This may take some time, depending on the type of paper.

Items to Prepare

When Using Rolls	An unused roll at least 254.0 mm (10.00 in) wide
When Using Sheets	Two sheets of unused paper of at least A4/Letter size (or one sheet when using A2 or larger)

Follow the procedure below to adjust.

1. Load paper.

   Loading Rolls on the Roll Holder
   Loading the Upper Roll on the Printer
   Loading Sheets in the Printer

2. Flick HOME screen and tap **Maintenance**.

   Menu Operations

3. Tap **Paper feed adjustment**.

4. Tap **Adjust print quality**.

5. Tap **Auto**.

6. Tap paper to adjust.

   A test pattern is printed for adjustment and adjustment is finished.

Manual Banding Adjustment

If printed images are affected by banding in different colors, execute **Adjust print quality** for adjustment of the paper feed amount.

Use manual adjustment with highly transparent media.

Manual adjustment requires you to enter an adjustment value after a test pattern is printed.

Note

- We recommend executing the adjustment if you have changed the paper type or paper size.
- Always check the **Set priority** values.

  Selecting Feed Amount Adjustment Method

- If additional fine-tuning is necessary, execute **Paper feed fine adjustment**.

  Fine-Tuning Paper Feed Amount

- Use **Adjust feed length** to ensure that lines in CAD drawings are printed at exactly the right length.

  Adjusting Line Length

Items to Prepare

When Using Rolls	An unused roll at least 254.0 mm (10.00 in) wide
When Using Sheets	Two sheets of unused paper of at least A4/Letter size

Follow the procedure below to adjust.

1. Load paper.

   Loading Rolls on the Roll Holder
   Loading the Upper Roll on the Printer
   Loading Sheets in the Printer

   ### Important

   - Always make sure the loaded paper matches the type of paper specified. Adjustment cannot be completed correctly unless the loaded paper matches the settings.

2. Flick HOME screen and tap **Maintenance**.

   Menu Operations

3. Tap **Paper feed adjustment**.

4. Tap **Adjust print quality**.

5. Tap **Manual**.

6. Tap paper to adjust.

Test pattern A is printed for manual adjustment.

Note

- When printing on sheets, follow the instructions on the screen and remove the sheet.

7. Examine test pattern A for adjustment. Determine pattern in which banding is least noticeable.

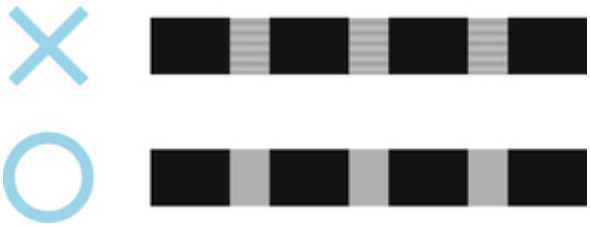

Note

- If banding seems least noticeable in two patterns but you cannot decide which one is better, choose an intermediate value. For example, choose 11 if you cannot decide whether pattern 10 or 12 is better.

8. Tap number you decided.

Test pattern B is printed for manual adjustment.

Note

- If you printed test pattern A on a sheet, follow the instructions on the screen and use another sheet of the same type of paper. Additionally, after test pattern B is printed, follow the instructions on the screen and remove the sheet.

9. Examine test pattern B for adjustment. Determine pattern in which banding is least noticeable.

10. Tap number you decided.

The adjustment value is now registered, and adjustment is complete.

Fine-Tuning Paper Feed Amount

If the contrast is uneven or banding in different colors appears at 30 mm (1.2 in) intervals in printed documents, try executing **Paper feed fine adjustment** during printing to fine-tune the feed amount.

Note

- The **Paper feed fine adjustment** menu is only displayed during printing.

  Additionally, it is displayed when you have selected **Auto** or **Prioritize print quality** in **Set priority** in **Paper feed adjustment**.

- Always execute **Adjust print quality** before **Paper feed fine adjustment**.

  Once you execute **Adjust print quality**, the **Paper feed fine adjustment** value will revert to 0.

  Automatic Banding Adjustment
  Manual Banding Adjustment

Follow the procedure below to adjust.

1. Flick HOME screen and tap **Maintenance** while printing is in progress.

   Menu Operations

2. Tap **Paper feed fine adjustment**.

3. Tap value.

   At this time, if banding in dark colors appears, select a setting value in the range 1 to 5, and if banding in light colors appears, select a setting value in the range -1 to -5.

Adjusting Line Length

To ensure that lines in CAD drawings are printed at exactly the right length, use **Adjust feed length** to adjust the amount that paper is advanced.

There are two options in **Adjust feed length** : **Print alignment pattern** and **Change adjustment values**.

Note

- We recommend executing the adjustment if you have changed the paper type or paper size.
- Always check the **Set priority** values before adjustment.

  Selecting Feed Amount Adjustment Method

Items to Prepare

When Using Rolls	• An unused roll at least 254.0 mm (10.00 in) wide • High-precision ruler
When Using Sheets	• One sheet of unused paper of at least A4/Letter size • High-precision ruler

Follow the procedure below to adjust.

1. Load paper.

   Loading Rolls on the Roll Holder
   Loading the Upper Roll on the Printer
   Loading Sheets in the Printer

   Important

   - Always make sure the loaded paper matches the type of paper specified. Adjustment cannot be completed correctly unless the loaded paper matches the settings.

2. Flick HOME screen and tap **Maintenance**.

   Menu Operations

3. Tap **Paper feed adjustment**.

4. Tap **Adjust feed length**.

5. Tap **Print alignment pattern** or **Change adjustment values**.

   - If you tap **Print alignment pattern**:

     The test pattern is printed for you to measure the scale and calculate the discrepancy.

     The scale bar prints "Millimeter" in 50 mm increments and "Inch" in 1-inch increments.

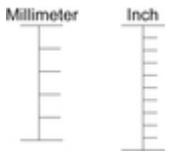

- If you tap **Change adjustment values**:

  No test pattern is printed. Instead, you will measure a document already printed to determine the discrepancy.

6. Tap amount of discrepancy.

   If the scale is shorter than the actual size, use a positive setting value. If it is longer, use a negative value.

   The feed amount can be adjusted in 0.02% increments.

Adjusting Vacuum Strength

When printing on heavyweight paper or paper that curls or wrinkles easily, if the print head rubs against paper, adjusting the level of suction against paper on the platen may improve results.

Important

- Paper rubbing against or becoming caught on the print head may jam or result in printed documents that are soiled.

1. Flick HOME screen and tap paper information area.

   Menu Operations

   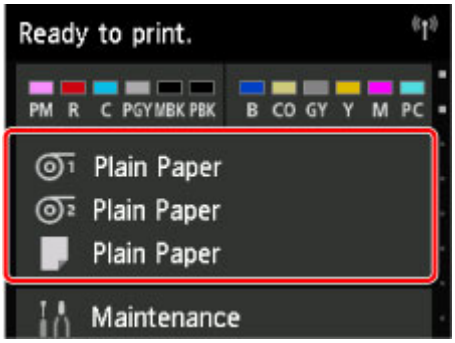

2. Tap paper to change vacuum strength on **Paper settings** screen.

3. Tap **Paper settings**.

4. Tap **Advanced**.

5. Tap **Transport unit vacuum strength**.

6. Tap vacuum strength.

Color Management

- **Digital Photo Printing Guide**
- **Color Calibration**
  - Managing Colors
  - Performing Color Calibration
  - Adjustment Types of Color Calibration
- **Device Management Console Guide**

Color Calibration

- Managing Colors
- Performing Color Calibration
- Adjustment Types of Color Calibration

Managing Colors

Color management (color calibration) corrects for variations in color tones due to differences between printers and aging, and obtains continuously stable corrected color tones.

The color tones of this printer can be corrected by executing color calibration.

If you have multiple printers, you can make the color tones of the printers the same by executing color calibration on each of the printers.

Execute Color Calibration

Executing color calibration improves color consistency by compensating for slight differences in how color appears due to individual variations or aging among the printers.

You can use the operation panel to enable or disable the color calibration adjustment values, view the calibration status, and configure notifications when color calibration needs to be executed.

You can also execute color calibration from Device Management Console.

See below for details.

➡ Device Management Console Guide(Windows)

➡ Device Management Console Guide(Mac OS)

Checking When to Execute Color Calibration

You can use the progress bar on the computer screen to determine when to execute color calibration.

Use Device Management Console to view when to execute color calibration.

See below for details.

➡ Device Management Console Guide(Windows)

➡ Device Management Console Guide(Mac OS)

Centrally Managing Multiple Printers

You can view the status of multiple network- and USB-connected printers.

You can also set up email notification if printer warnings or errors occur.

Use Device Management Console to manage the printers.

See below for details.

➡ Device Management Console Guide(Windows)

➡ Device Management Console Guide(Mac OS)

Using Paper Other Than Canon Genuine Paper

To execute color calibration for paper other than Canon genuine paper, you must create and register dedicated media information.

To register this media information, use Media Configuration Tool.

See below for details.

➡ Media Configuration Tool Guide(Windows)

➡ Media Configuration Tool Guide(Mac OS)

Performing Color Calibration

Color calibration improves color consistency by compensating for slight differences in how color appears when printing due to individual variations or aging among the printers.

Executing color calibration will print a test pattern (built into the printer) that is then read automatically by the printer.

By this operation, calibration adjustment values reflecting the print result of the test pattern are set automatically.

Important

- To increase the color stability precision when executing color calibration, maintain a constant temperature and humidity environment each time within the range of temperatures of 59 to 86°F (15 to 30°C) and within the range of humidities of 40 to 60%.

  Executing color calibration under various temperature and humidity conditions may prevent the printer from making the correct adjustments.
- Before color calibration, ensure the printer is not exposed to direct sunlight or other strong sources of light.

  If the printer is exposed to strong sources of light, correct adjustment may not be possible.

Recommend Timing for Color Calibration

We recommend color calibration in the following situations.

- After initial printer installation
- After print head replacement
- If colors seem different from before, despite using the same printing environment, under the same conditions
- To print with colors aligned from multiple printers
- When the execution guide is displayed

Executing Color Calibration

Execute color calibration using the following procedure.

1. You can confirm whether the paper to be loaded can be used in color calibration.

   ➡ Paper Information List

2. Load the paper.

   ➡ Loading Rolls on the Roll Holder
   ➡ Loading the Upper Roll on the Printer
   ➡ Loading the Lower Roll on the Roll Unit (Option)
   ➡ Loading Sheets in the Printer

3. Flick Home screen and tap **Maintenance**.

   ➡ Touch Screen

   The **Maintenance** screen appears.

4. Tap **Color calibration**.

5. Tap **Auto adjust**.

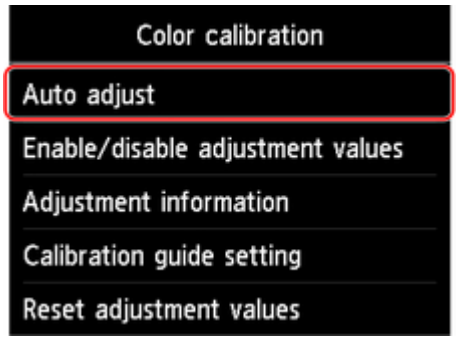

   A confirmation message appears.

   Note

   - For details about menu items other than **Auto adjust**, see "Other Menu Items."

6. Tap **Yes**.

   The paper source setting screen appears.

7. Select and tap paper source with loaded paper.

   After the paper is confirmed, and color calibration is executed, the calibration adjustment value is set automatically.

Other Menu Items

- **Enable/disable adjustment values**

  You can select whether to apply the calibration adjustment value when printing.

  However, for settings that differ from the **Calibration Value** of the printer driver, the values specified in the printer driver take priority.

- **Adjustment information**

  You can confirm the color calibration adjustment date/time and the executed media type.

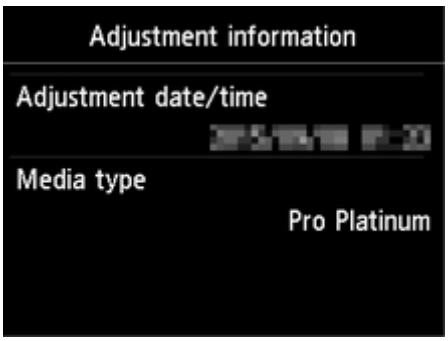

- **Calibration guide setting**

  You can select whether to display a message asking to execute color calibration on the touch screen in the following situations.

  - When a new print head has been installed
  - When a certain amount of printing has been executed after color calibration is executed
  - When the data of color calibration has been initialized

- **Reset adjustment values**

  Clear the color calibration adjustment value and the adjustment information.

Adjustment Types of Color Calibration

Adjustment Types of Color Calibration

Common calibration and unique calibration are the two adjustment types of color calibration.

One adjustment type is selected according to the media type that is used to execute color calibration.

Features

Common Calibration

When color calibration is executed for one type of Canon genuine paper, the color is adjusted for other paper.

You can use multiple media types easily in a short time because it is not necessary to execute color calibration on each media type.

Unique Calibration

Even when color calibration is executed, the color of other paper is not adjusted, so the color of other paper is not affected.

Note

- For details on whether or not color calibration can be executed and the adjustment types for various types of paper, see "Paper Information List."

- Common Calibration

  If color calibration is executed on a media type categorized as common calibration, new common calibration adjustment values are set.

  Among the media type categorized as common calibration, newly set common calibration adjustment values are set for paper for which color calibration has not been performed.

  The common calibration adjustment values apply to all print qualities.

  Note

  - If the paper being used does not support color calibration, execute color calibration with paper categorized as common calibration in advance.

    The new common calibration adjustment values even apply to the paper being used.
  - If color calibration has been performed, the calibration adjustment values are already set.

    The new common calibration adjustment values are not overwritten for this media type.

- Unique Calibration

  If color calibration is executed on a media type categorized as unique calibration, new unique calibration adjustment values are set.

Note

- If color calibration is not executed even once using the paper categorized as unique calibration, executing common calibration overwrites the calibration adjustment values.

Example: When the following color calibration is executed with the default settings

First time: Execute color calibration with media type A (categorized as common calibration)

- All media types A to N: The calibration adjustment values of media type A are applied.

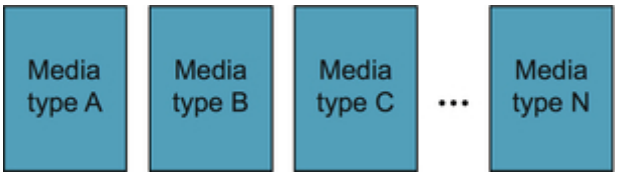

Second time: Execute color calibration with media type B (categorized as common calibration)

- Media type A: The calibration adjustment values of media type A applied the first time take priority.
- Media types B to N: The calibration adjustment values of media type B are applied.

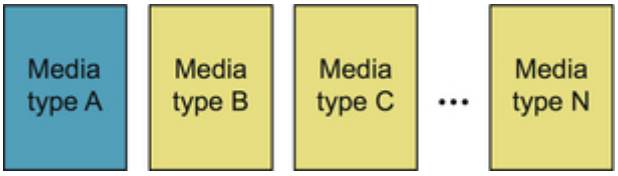

Third time: Execute color calibration with media type C (categorized as unique calibration)

- Media type A: The calibration adjustment values of media type A applied the first time take priority.
- Media types B and D to N: The calibration adjustment values of media type B applied the second time take priority.
- Media type C: The calibration adjustment values of media type C are applied.

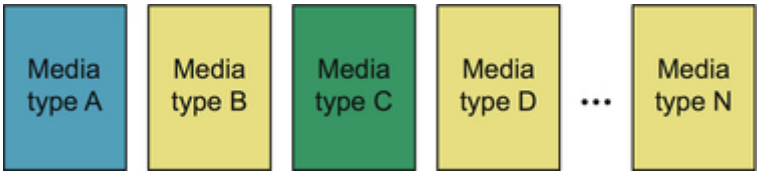

Note

- You can confirm the currently applied calibration adjustment date and the executed paper type with **Adjustment information** in **Color calibration** on the touch screen menu.

  Performing Color Calibration

To Confirm the Paper Information Registered on the Printer

To print media information, select **Device settings** > **Paper-related settings** > **Print advanced paper settings** on the touch screen menu.

The following appears.

Display	Meaning
Calibration Exec.	Supports color calibration
OK(Common)	Executes common calibration
OK(Unique)	Executes unique calibration
N/A	Color calibration cannot be executed
Calibration Adj. Value	Calibration application information (Executed date and paper name appear)

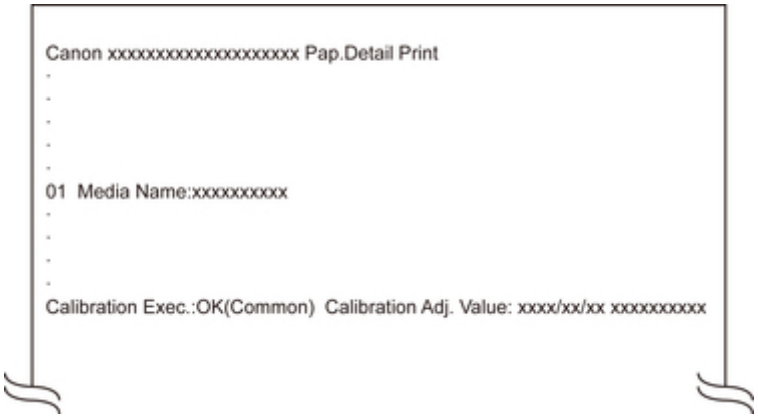

Note

- You can check the media information with the Device Management Console or printer driver.

  See below for details.

  ➡ Device Management Console Guide(Windows)

  ➡ Device Management Console Guide(Mac OS)

  ➡ Updating Media Information in Printer Driver(Windows)

  ➡ Confirm the Printer Paper Information(Mac OS)

Maintenance and Consumables

- **Ink Tanks**
  - Ink Tanks
  - Replacing Ink Tanks
  - Checking Ink Tank Levels
  - When to Replace Ink Tanks
- **Print Head**
  - Print Head
  - Checking for Nozzle Clogging
  - Cleaning the Print Head
  - Replacing the Print Head
- **Maintenance Cartridge**
  - Maintenance Cartridge
  - Replacing the Maintenance Cartridge
  - Checking the Remaining Maintenance Cartridge Capacity
  - When to Replace the Maintenance Cartridge
- **Cutter Blade**
  - Cutter Blade
  - Replacing the Cutter Blade
- **Performing Maintenance Functions from Your Computer (Windows)**
  - Cleaning the Print Heads
  - Printing a Nozzle Check Pattern
- **Performing Maintenance Functions from Your Computer (Mac OS)**
  - Cleaning the Print Heads
  - Printing a Nozzle Check Pattern
  - Adjusting the Paper Feed Volume
- **Cleaning the Printer**

- Cleaning the Printer Exterior
- Cleaning Inside the Top Cover
- Cleaning the Roll Unit
- Cleaning the Print Head

➤ **Other Maintenance**

- Preparing to Transfer the Printer
- Reinstalling the Printer

Ink Tanks

- Ink Tanks
- Replacing Ink Tanks
- Checking Ink Tank Levels
- When to Replace Ink Tanks

Ink Tanks

When purchasing, check the Model number.

Shape	Colors	Model number	Ink Type	Capacity
	Matte Black	PFI-1100 MBK	Pigment ink	5.4 fl oz (160 ml)
	Photo Black	PFI-1100 PBK		
	Cyan	PFI-1100 C		
	Magenta	PFI-1100 M		
	Yellow	PFI-1100 Y		
	Photo Cyan	PFI-1100 PC		
	Photo Magenta	PFI-1100 PM		
	Gray	PFI-1100 GY		
	Photo Gray	PFI-1100 PGY		
	Red	PFI-1100 R		
	Blue	PFI-1100 B		
	Chroma Opti-mizer	PFI-1100 CO		
	Matte Black	PFI-1300 MBK		11.2 fl oz (330 ml)
	Photo Black	PFI-1300 PBK		
	Cyan	PFI-1300 C		
	Magenta	PFI-1300 M		
	Yellow	PFI-1300 Y		
	Photo Cyan	PFI-1300 PC		
	Photo Magenta	PFI-1300 PM		
	Gray	PFI-1300 GY		
	Photo Gray	PFI-1300 PGY		
	Red	PFI-1300 R		
	Blue	PFI-1300 B		
	Chroma Opti-mizer	PFI-1300 CO		

Shape	Colors	Model number	Ink Type	Capacity
	Matte Black	PFI-1700 MBK	Pigment ink	23.7 fl oz (700 ml)
	Photo Black	PFI-1700 PBK		
	Cyan	PFI-1700 C		
	Magenta	PFI-1700 M		
	Yellow	PFI-1700 Y		
	Photo Cyan	PFI-1700 PC		
	Photo Magenta	PFI-1700 PM		
	Gray	PFI-1700 GY		
	Photo Gray	PFI-1700 PGY		
	Red	PFI-1700 R		
	Blue	PFI-1700 B		
	Chroma Opti-mizer	PFI-1700 CO		

Note

- For instructions on replacing the ink tanks, see "Replacing Ink Tanks."

Replacing Ink Tanks

Compatible Ink Tanks

For details on compatible ink tanks, see "Ink Tanks."

You can replace ink tanks in 5.4 fl oz (160 ml), 11.2 fl oz (330 ml), and 23.7 fl oz (700 ml) capacities.

Note

- Depending on the color, you can also use an ink tank with a different capacity.

Precautions When Handling Ink Tanks

Take the following precautions when handling ink tanks.

Caution

- For safety, keep ink tanks out of the reach of children.
- If ink is accidentally ingested, contact a physician immediately.

Important

- There may be ink around the ink holes of an ink tank you removed. Handle the ink tanks carefully during replacement. The ink may stain clothing.
- Do not install ink tanks used in this printer in another model of printer.

  This will prevent correct ink level detection, which may damage the printer or cause other problems.
- We recommend using up an ink tank in the course of printing within six months after breaking the seal. Printing quality may be affected if you use older ink tanks.
- Do not leave the printer without ink tanks installed for extended periods (a month or more). Residual ink may become clogged inside the printer and affect printing quality.

How to replace an ink tank

If a message indicates you should replace an ink tank, check the message details and go to step 2.

1. Selecting Ink Tank Replacement from menu
2. Removing Ink Tanks

   ➡Removing ink tank (5.4 fl oz (160 ml) / 11.2 fl oz (330 ml))

   ➡Removing ink tank (23.7 fl oz (700 ml))
3. Loading New Ink Tanks

   ➡Loading ink tank (5.4 fl oz (160 ml) / 11.2 fl oz (330 ml))

   ➡Loading ink tank (23.7 fl oz (700 ml))

Important

- Do not remove an ink tank during initialization immediately after turning on the printer, or during print head cleaning. Ink may leak out.

Note

- Ink tank replacement is possible even during printing, when print jobs are being canceled, or when paper is being advanced.

Selecting Ink Tank Replacement from menu

1. Tap ink display area on Home screen.

   Touch Screen

   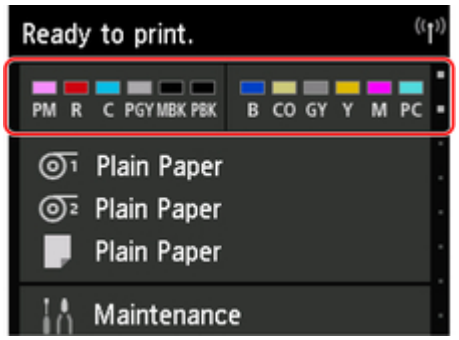

   The **Current estimated ink levels** screen appears.

2. Tap **Replace**.

   Instructions appear on the touch screen.

Removing ink tank (5.4 fl oz (160 ml) / 11.2 fl oz (330 ml))

1. Open the ink tank cover of the ink tank you are replacing and check the ink lamp.

   The ink lamp flashes if there is no ink left.

   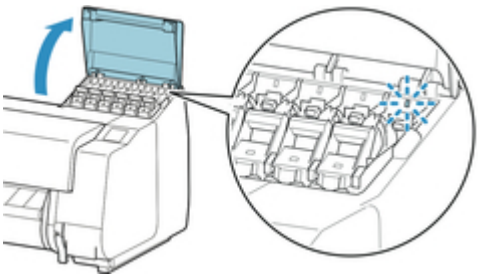

Important

- Avoid jarring the printer a lot when replacing an ink tank. Handle the printer gently when replacing tanks.

2. Pull forward handle part (A) of ink tank lock lever of color to replace while pressing button at B.

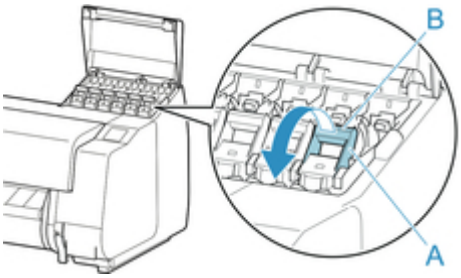

3. Lift ink tank lock lever until it stops, and then push it down toward front.

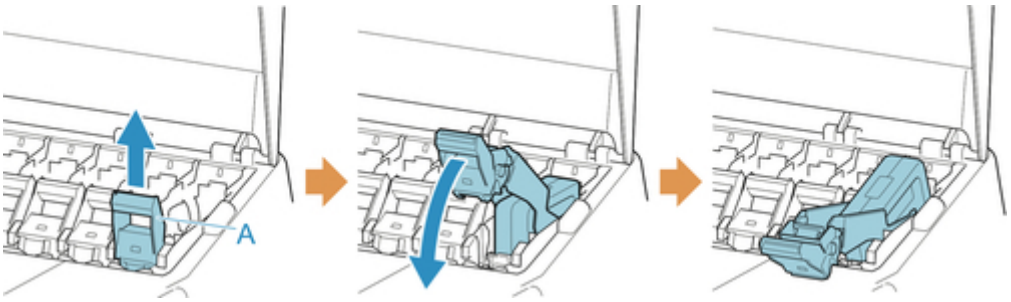

Note

- Check that the ink tank lock lever does not return.

4. Remove ink tank by grips (A), and then tap **OK**.

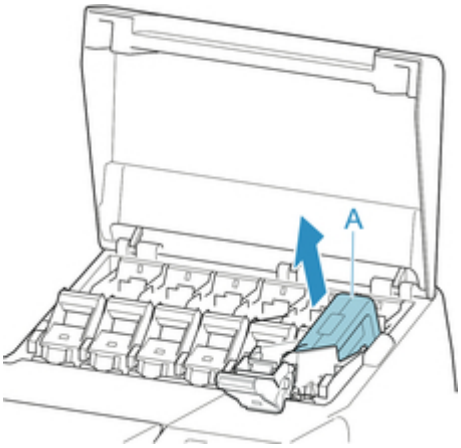

Important

- Store the removed ink tank with ink remaining with the ink holes (A) facing up. Otherwise, ink may leak and cause stains. Put the removed ink tank in a plastic bag and close the bag.

Note

- Dispose of the used ink tank in accordance with local regulations.

Removing ink tank (23.7 fl oz (700 ml))

1. Open the ink tank cover of the ink tank you are replacing and check the ink lamp.

   The ink lamp flashes if there is no ink left.

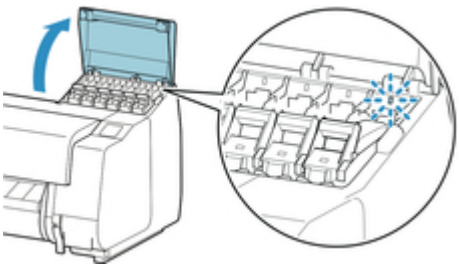

Important

- Avoid jarring the printer a lot when replacing an ink tank. Handle the printer gently when replacing tanks.

2. Pull forward handle part (A) of ink tank lock lever of color to replace while pressing button at B.

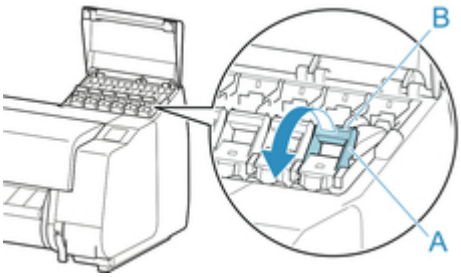

3. Lift ink tank lock lever until it stops, and then push it down toward front.

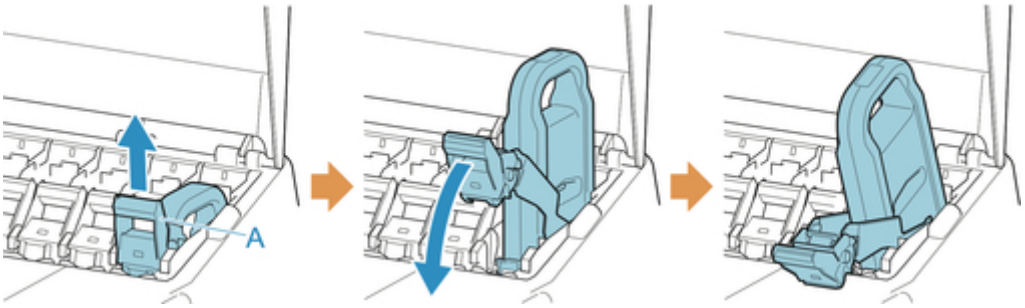

Note

- Check that the ink tank lock lever does not return.

4. Remove ink tank by handle (A), and then tap **OK**.

Important

- Store the removed ink tank with ink remaining in the box with the ink holes (A) facing up. Otherwise, ink may leak and cause stains.

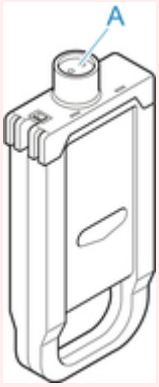

Note

- Dispose of the used ink tank in accordance with local regulations.

Loading ink tank (5.4 fl oz (160 ml) / 11.2 fl oz (330 ml))

1. Before opening the pouch, tilt the ink tank to the left and right gently seven or eight times.

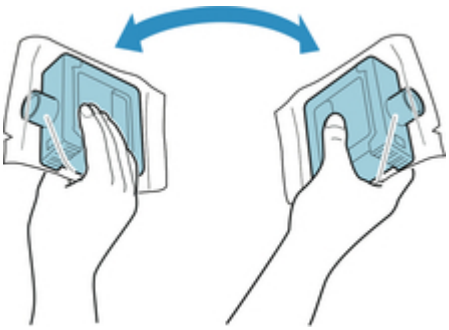

Important

- Do not remove and agitate an ink tank that has already been installed in the printer. Ink may leak out.
- Failure to agitate the ink tank may cause the ink components to precipitate and may affect printing quality.

Note

- If the ink tank is at a low temperature, allow it to warm up to room temperature before installing.

2. Open the pouch and remove the ink tank.

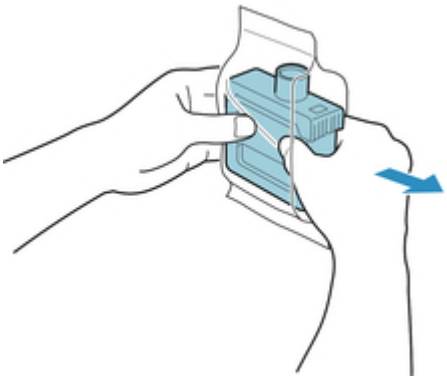

Important

- Never touch the ink holes (A) or the metal contacts (B). This may cause stains, damage the ink tank, and affect printing quality.

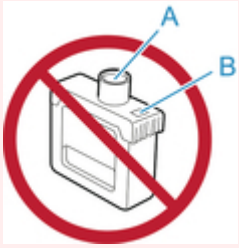

- Avoid dropping the ink tank after removing it from the pouch. Otherwise, ink may leak and cause stains.

3. Tap **OK** and insert ink tank into holder with ink holes down and metal contacts at rear.

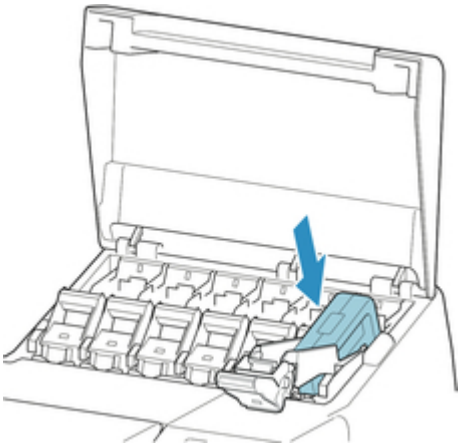

Important

- An ink tank cannot be loaded in the holder if the color or orientation is incorrect.

  If the ink tank does not fit in the holder, do not force it into the holder. Reinstall while checking the label color display, ink tank color, and ink tank orientation.

4. Lift up ink tank lock lever, and then push it down.

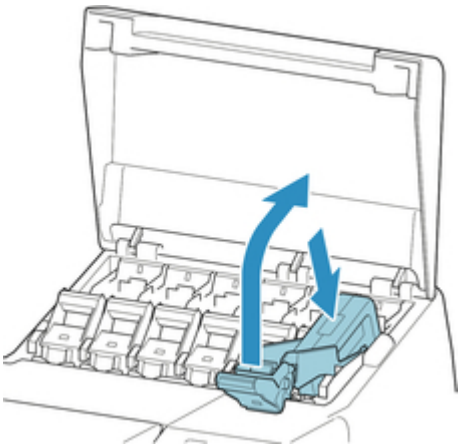

5. Push handle part of ink tank lock lever firmly all the way in.

6. Make sure ink lamp indicator is lit.

Note

- If the ink lamp is not lit, reload the tank.

7. Close ink tank cover.

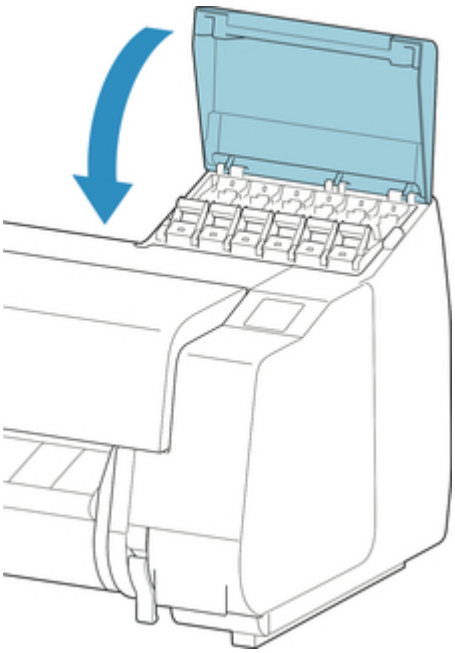

Loading ink tank (23.7 fl oz (700 ml))

1. Before opening the pouch, hold the new ink tank with both hands and tilt it to the left and right as shown, shaking it gently seven or eight times.

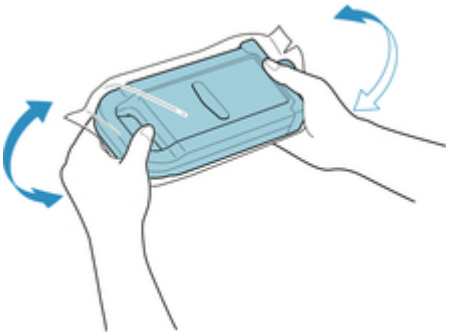

Caution

- A 23.7 fl oz (700 ml) ink tank is heavy, so use your whole arm to agitate it instead of just your wrist. If you agitate the ink tank using just your wrist, you may injure your wrist.

Important

- Do not remove and agitate an ink tank that has already been installed in the printer. Ink may leak out.
- Failure to agitate the ink tank may cause the ink components to precipitate and may affect printing quality.

Note

- If the ink tank is at a low temperature, allow it to warm up to room temperature before installing.

2. Open the pouch and remove the ink tank.

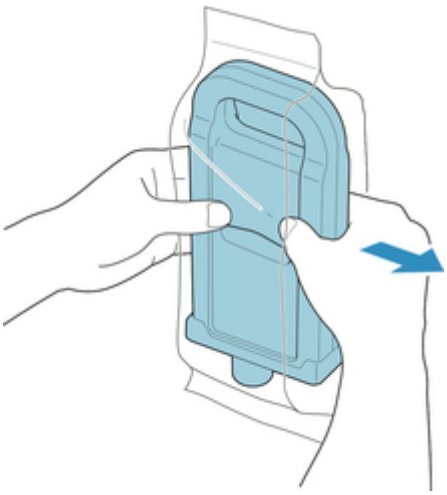

Important

- Never touch the ink holes (A) or the metal contacts (B). This may cause stains, damage the ink tank, and affect printing quality.

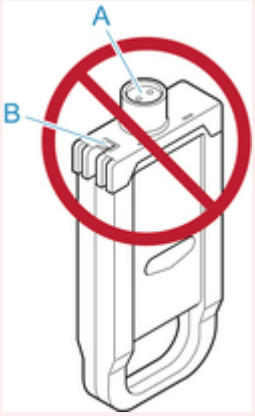

- Avoid dropping the ink tank after removing it from the pouch. Otherwise, ink may leak and cause stains.

3. Tap **OK** and insert ink tank into holder with ink holes down and metal contacts at rear.

Important

- An ink tank cannot be loaded in the holder if the color or orientation is incorrect.

  If the ink tank does not fit in the holder, do not force it into the holder. Reinstall while checking the label color display, ink tank color, and ink tank orientation.

4. Lift up ink tank lock lever, and then push it down.

5. Push handle part of ink tank lock lever firmly all the way in.

6. Make sure ink lamp indicator is lit.

Note

- If the ink lamp is not lit, reload the tank.

7. Close ink tank cover.

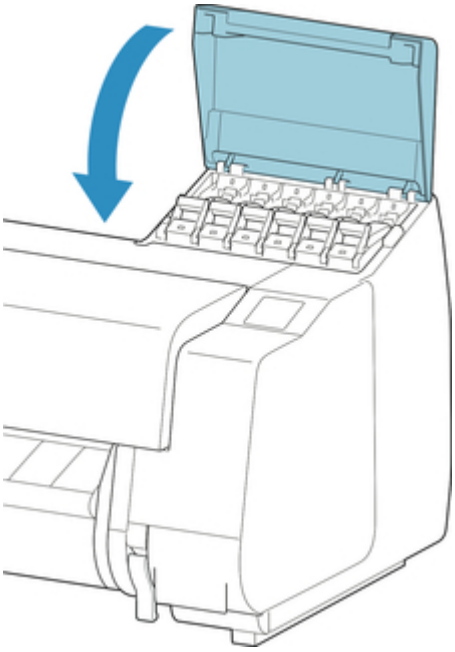

Checking Ink Tank Levels

On the touch screen, you can check how much ink is left in the ink tank.

1. Tap ink display area on Home screen.

   Touch Screen

   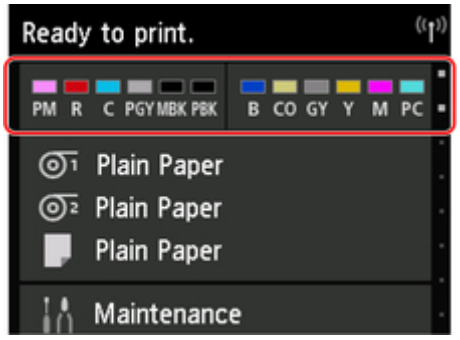

   The **Current estimated ink levels** screen appears.

   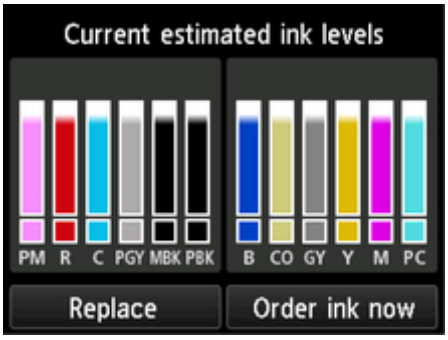

   If ink is low, appears; if no ink is left, appears; if you have deactivated ink level detection, appears.

   The remaining ink level is indicated as shown below.

   If the touch screen indicates to replace the ink tank, replace the ink tank. If a message is displayed indicating to check the remaining ink levels, or after tasks that consume a lot of ink such as large-format printing or head cleaning, check the remaining levels and replace ink tank as needed.

   Replacing Ink Tanks

Note

- Tap **Order ink now** to view the ink supplier information.

When to Replace Ink Tanks

Replace or prepare to replace ink tanks in the following situations.

If Ink Confirmation Message Appears on touch screen

If ink is low, the **Status** lamp lights orange and a notification message will appear on the touch screen. You can continue to print, but prepare the ink tanks.

➡ Checking Ink Tank Levels

Before print jobs and maintenance that consume a lot of ink

If little ink is left, there may not be enough for large-format printing, head cleaning, and maintenance, which require a lot of ink. Replace or prepare to replace the ink tanks in the following situations.

If Message for Ink Replacement Appears on touch screen

When the ink runs out, the **Status** lamp flashes orange, a message regarding ink tanks replacement appears on the touch screen, and printing is disabled. Replace the ink tank.

Print Head

- Print Head
- Checking for Nozzle Clogging
- Cleaning the Print Head
- Replacing the Print Head

Print Head

When purchasing, check the Model number.

Shape	Model number
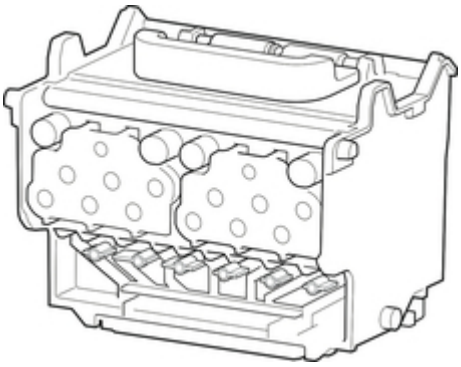	PF-10

Note

- For instructions on replacing the print head, see "Replacing the Print Head."

Checking for Nozzle Clogging

If printing is faint or affected by banding in different colors, make sure the print head nozzles are clear by printing a test pattern to check the nozzles.

Note

- By default, nozzles are checked at fixed intervals.

  Auto maintenance settings

Paper to Prepare

When Using Rolls	An unused roll at least 10.00 in (254.0 mm) wide
When Using Sheets	One sheet of unused paper of at least A4/Letter size

1. Load paper.

   Loading Rolls on the Roll Holder
   Loading the Upper Roll on the Printer
   Loading the Lower Roll on the Roll Unit (Option)
   Loading Sheets in the Printer

2. Flick Home screen and tap **Maintenance**.

   Touch Screen

   The **Maintenance** screen appears.

3. Tap **Print nozzle check pattern**.

   A confirmation message appears.

4. Tap **Yes**.

   The printer now prints a test pattern for checking the nozzles.

5. Check the printing results.

   If the horizontal lines are not faint or incomplete, the nozzles are clear.

   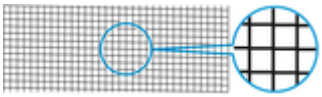

   If some sections of the horizontal lines are faint or incomplete, the nozzles for those colors are clogged.

   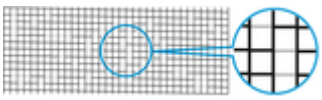

Note

- Because CO has no color, printing is performed on top of the black pattern. Check if the dark gray areas have lines (A) in the CO pattern.

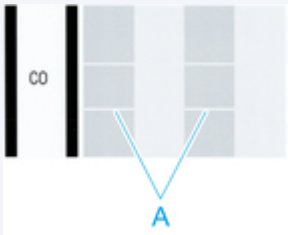

If horizontal lines are faint or incomplete, execute print head cleaning.

Cleaning the Print Head

Cleaning the Print Head

If printing is faint, cleaning the print head may improve results.

Choose one of three print head cleaning modes (**Cleaning**, **Deep cleaning**, or **System cleaning**), depending on the problem to resolve.

- **Cleaning**

  Use this mode if printing is faint or contains foreign substances. This method of cleaning consumes the least amount of ink.

  It takes about 8 minutes.

- **Deep cleaning**

  Use this mode if no ink is ejected at all or if **Cleaning** does not solve the problem.

  It takes about 8 or 9 minutes.

- **System cleaning**

  Use this if printing is not improved after **Deep cleaning**. **System cleaning** consumes a very large amount of ink. Performing this frequently consumes the ink faster. Perform this only when needed.

  It takes about 10 minutes.

Important

- Do not remove the maintenance cartridge or ink tanks during **Cleaning**, **Deep cleaning**, or **System cleaning**.

  Ink may leak or an error may occur.

- If printing is not improved after **System cleaning**, the print head may be at the end of its service life. Contact your Canon dealer for assistance.

Note

- Check the nozzle check pattern and select an ink group for which to perform cleaning as needed. You can clean all print head or select pattern 1, 2, or 3 to clean the print head with a clogged nozzle.

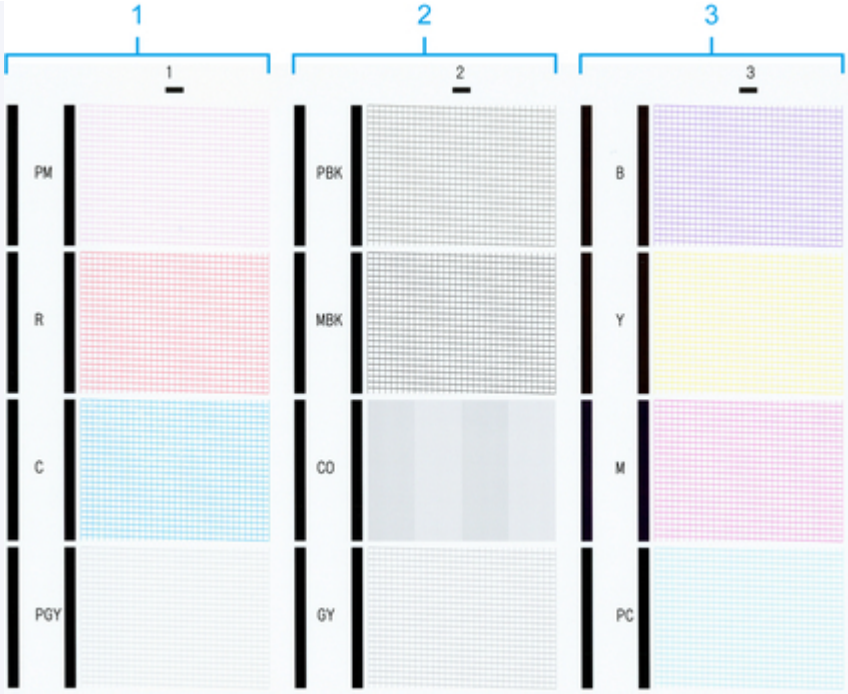

- By default, nozzles are checked at fixed intervals.

  ➡ Auto maintenance settings

Perform cleaning as follows.

1. Flick Home screen and tap **Maintenance**.

   ➡ Touch Screen

   The **Maintenance** screen appears.

2. Tap **Print head cleaning**.

3. Select and tap **Cleaning**, **Deep cleaning**, or **System cleaning**.

4. Select and tap the ink group to be cleaned.

   - **All colors**
   - **Pattern 1**:PM/R/C/PGY
   - **Pattern 2**:PBK/MBK/CO/GY
   - **Pattern 3**:B/Y/M/PC

   A confirmation message appears.

5. Tap **Yes**.

   Head cleaning is now executed.

6. Print a test pattern to check the nozzles and determine whether cleaning has cleared the nozzles.

   ➡ Checking for Nozzle Clogging

Replacing the Print Head

If the touch screen indicates to replace the print head or if instructed to do so by your Canon dealer, replace the print head.

Compatible print head

For details on compatible print head, see "Print Head."

Precautions When Handling print head

Take the following precautions when handling the print head.

Caution

- For safety, keep print head out of the reach of children.
- If ink is accidentally ingested, contact a physician immediately.
- Do not touch the print head immediately after printing. The print head becomes extremely hot, and there is a risk of burns.

Important

- There may be ink around the nozzles of the print head you remove. Handle the print head carefully during replacement. The ink may stain clothing.
- Do not open the print head pouch until immediately before installation. After removing the print head from the pouch, install it right away. If the print head is left as is after the pouch is opened, the nozzles may dry out, which may affect printing quality.

Selecting Menu for print head Replacement

Caution

- When replacing the print head immediately after printing, wait a few minutes before replacing it. The metal parts of the print head become hot during printing, and there is a risk of burns from touching these parts.

Important

- Your hands may become dirty during print head replacement. Use the gloves provided in the box with the new print head for replacement.

Note

- Prepare a new ink tank when ink levels are low.
- Prepare a new maintenance cartridge when the remaining capacity of the maintenance cartridge is low.

1. Remove any paper that has been fed.
   - When using a roll, rewind it.
     - Removing the Upper Roll from the Printer
     - Removing the Lower Roll from the Roll Unit (Option)
   - When using sheets, remove the sheet.
     - Removing Sheets
2. Clean inside top cover.
   - Cleaning Inside the Top Cover
3. Flick Home screen and tap **Maintenance**.
   - Touch Screen

   The **Maintenance** screen appears.
4. Tap **Head replacement**.

   A confirmation message appears.
5. Tap **Yes**.

   Ink begins being drawn in. When it finishes, instructions are displayed on the touch screen.

   It takes about 5-6 minutes for ink to be drawn into the system.

Replacing print head

1. Open top cover.

   The print head replacement procedure appears on the touch screen.

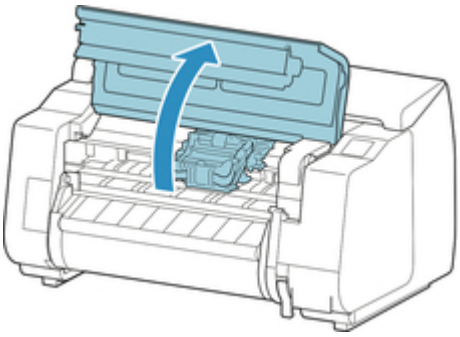

2. If the print head locking cover and print head lock lever are dirty, use a damp cloth that you have wrung out completely to wipe them clean.

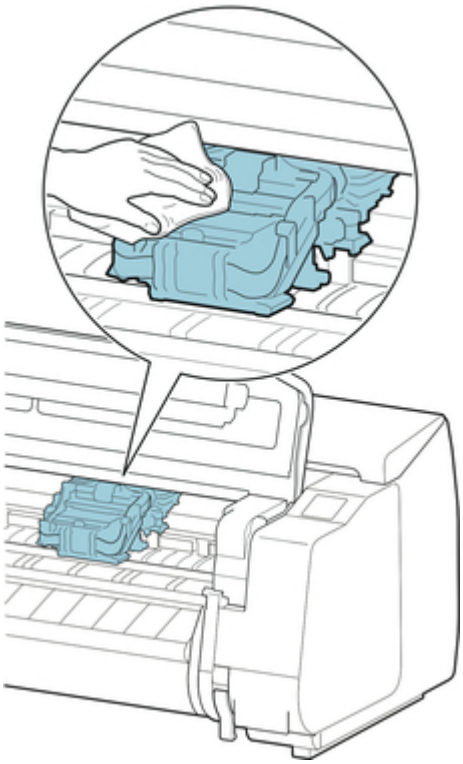

Important

- Never touch the linear scale (A), carriage shaft (B), or ink tube stabilizer (C). Touching may damage them.

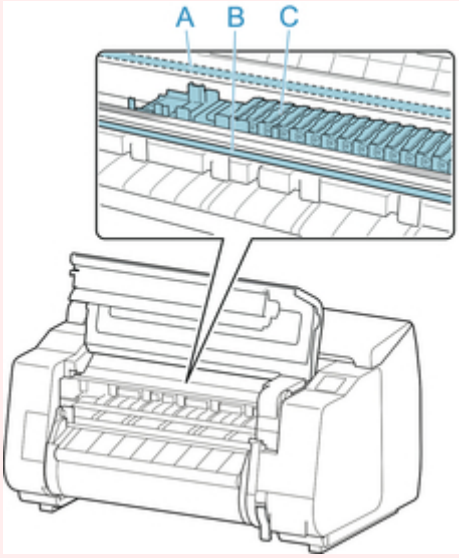

3. If ventilation duct (A) is dirty, use damp cloth that you have wrung out completely to wipe it clean.

   If the Carriage is obscuring the ventilation duct, move the Carriage manually before cleaning the duct.

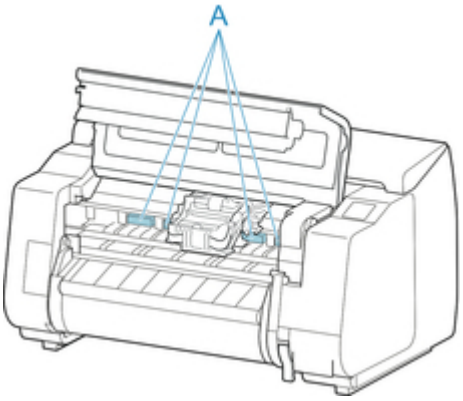

4. While pressing button (A) in center of print head lock lever, pull it forward to open it until it stops.

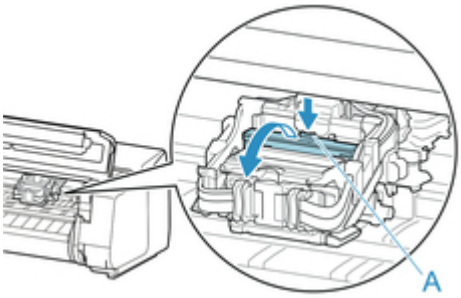

5. Holding grip (A), open print head locking cover until it stops.

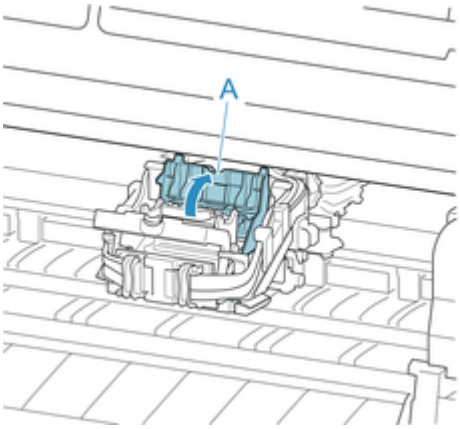

6. Remove print head by blue handle (A), and then tap **OK**.

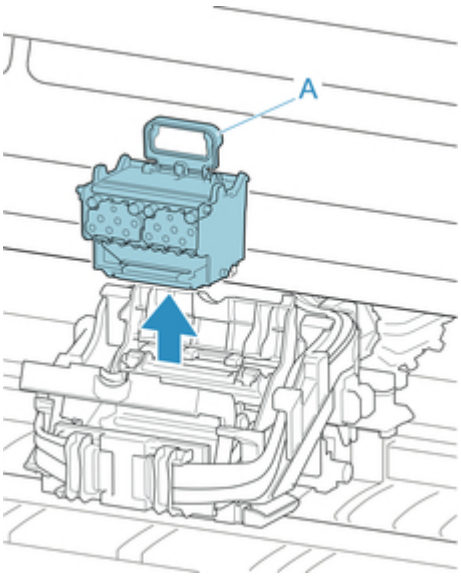

Important

- Never touch the metal contacts of the Carriage. Furthermore, do not allow any dirt or debris to become adhered to the metal contacts of the Carriage. These may damage the printer.

Note

- Dispose of the used print head in accordance with local regulations.

7. Remove print head that was in case from pouch.

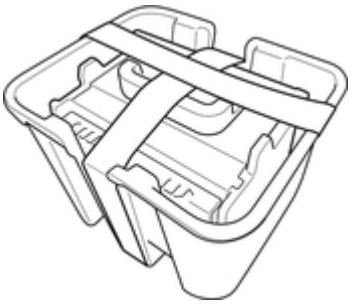

8. Remove tape used to secure print head.

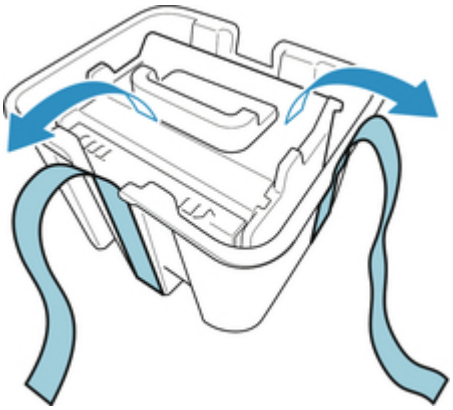

9. Lift print head by blue handle and remove orange protective cap (2).

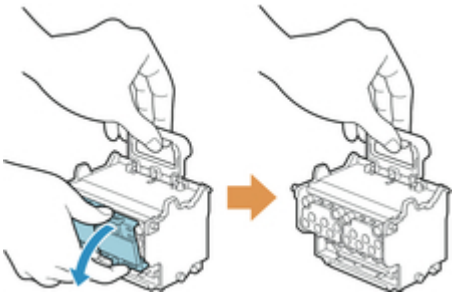

Important

- Always carry the print head by the blue handle. Never touch the nozzle (A) or metal contacts (B). This may damage the print head and affect printing quality.
- Never touch the ink holes (C). This may affect printing quality.

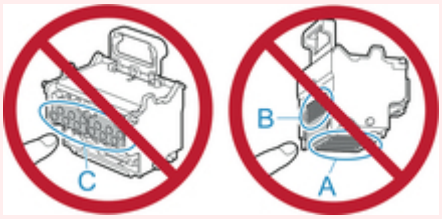

- The inside surface of the protective cap is coated with ink to protect the nozzle. Be careful not to touch these surfaces when removing the caps.
- The print head contains ink to protect the nozzle. We recommend removing the protective cap as you hold it over the print head case or safely out of the way to avoid spilling ink and staining your clothes or the surrounding area. If ink accidentally spills, wipe off the ink with a dry cloth.
- If you need to put a print head somewhere temporarily before installation, return it to the case in the same orientation. If placed face down, the nozzle or metal contacts may become damaged, which may affect the printing quality.
- Do not reattach the removed protective cap. Dispose of these materials in accordance with local regulations.

10. Carefully push print head firmly in, ensuring that nozzle, metal contacts, and ink holes do not touch Carriage.

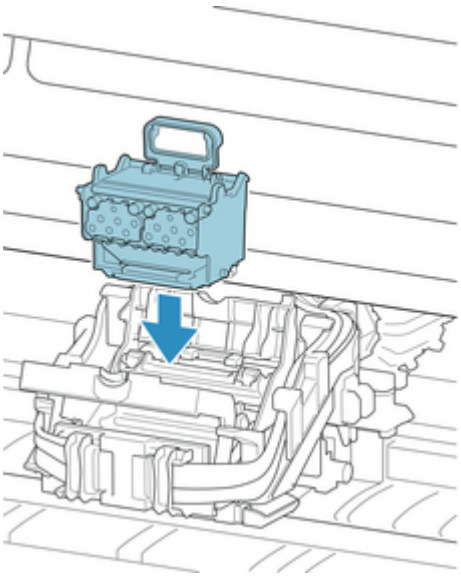

11. Lower print head locking cover to front and lock print head.

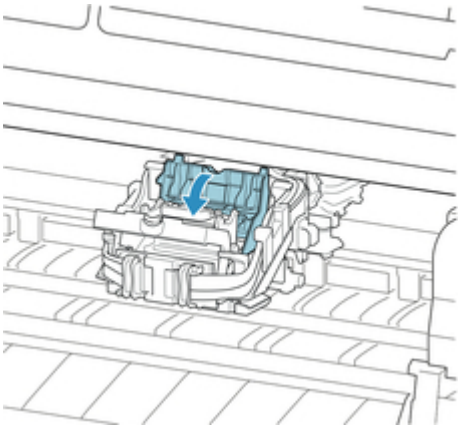

12. Lower print head lock lever toward the back until it clicks.

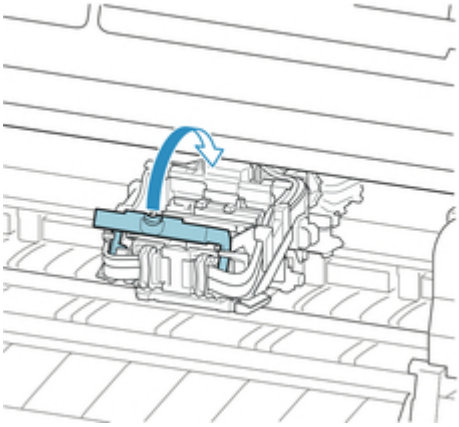

13. Close top cover.

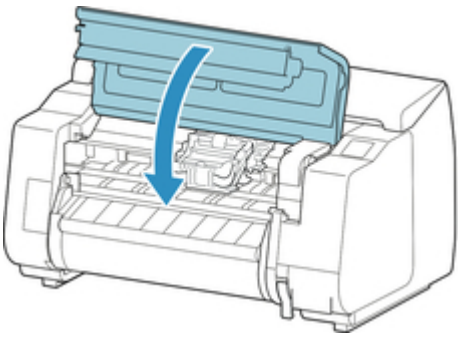

Ink now fills the system. It takes about 18 or 19 minutes.

Important

- While ink is being filled, definitely do not remove the ink tank or maintenance cartridge. Ink may leak out.

Note

- Print head position adjustment is executed when **Print pattern after new head** is set to **ON**.

  Follow the instructions on the touch screen to load paper.

  Auto maintenance settings

Maintenance Cartridge

- Maintenance Cartridge
- Replacing the Maintenance Cartridge
- Checking the Remaining Maintenance Cartridge Capacity
- When to Replace the Maintenance Cartridge

Maintenance Cartridge

When purchasing, check the Model number.

Shape	Model number
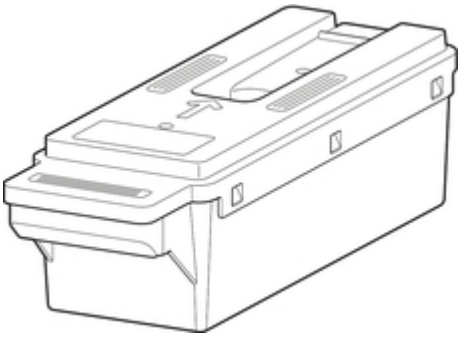	MC-30

Note

- For instructions on replacing the maintenance cartridge, see "Replacing the Maintenance Cartridge."

Replacing the Maintenance Cartridge

Compatible Maintenance Cartridges

For details on compatible maintenance cartridge, see "Maintenance Cartridge."

Precautions When Handling Maintenance Cartridge

Take the following precautions when handling the maintenance cartridge.

Caution

- For safety, keep maintenance cartridge out of the reach of children.
- If ink is accidentally ingested, contact a physician immediately.

Important

- Do not remove the maintenance cartridge except to replace it. Ink may leak out.
- Do not remove a maintenance cartridge during initialization immediately after turning on the printer, during print head cleaning, while ink is being drawn out, or during initialization immediately after replacing the maintenance cartridge.

  The maintenance cartridge may become damaged or ink may leak out.
- To prevent ink from leaking from a used maintenance cartridge, avoid dropping the cartridge or storing it at an angle. Otherwise, ink may leak and cause stains.
- Ink adheres to the top of the maintenance cartridge after it has been used. Handle the maintenance cartridge carefully during replacement. The ink may stain clothing.

How to Replace a Maintenance Cartridge

If a message indicates you should replace a maintenance cartridge, check the message details and go to step 2.

1. Selecting Maintenance Cartridge Replacement from Menu
2. Replacing Maintenance Cartridge

Selecting Maintenance Cartridge Replacement from Menu

1. Flick Home screen and tap **Maintenance**.

   ➡ Touch Screen

   The **Maintenance** screen appears.

2. Tap **Maintenance cartridge info**.

The **Maintenance cartridge info** screen appears.

3. Tap **Replace**.

   Instructions appear on the touch screen.

Replacing Maintenance Cartridge

1. Open box, and remove plastic bag and maintenance cartridge.

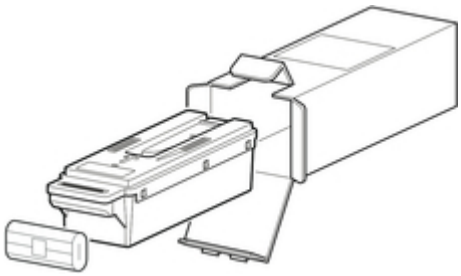

Important

- Never touch the metal contacts (A). This may damage the maintenance cartridge.

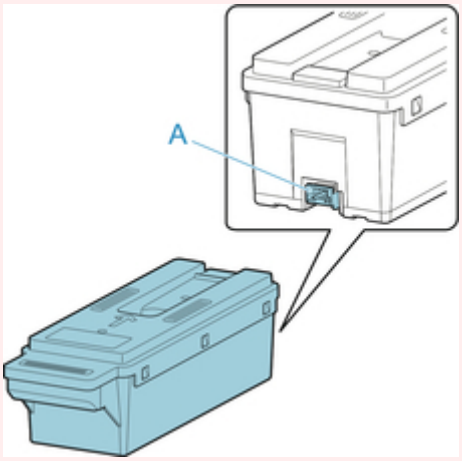

2. Open maintenance cartridge cover.

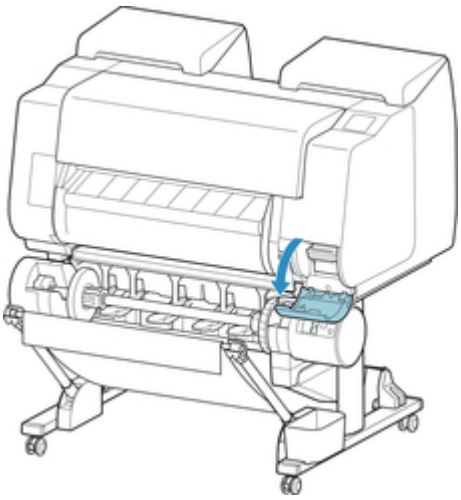

3. Hold the used maintenance cartridge by the grip (A) with one hand and put your other hand under the maintenance cartridge to hold it firmly on the bottom, keeping it level as you pull it out.

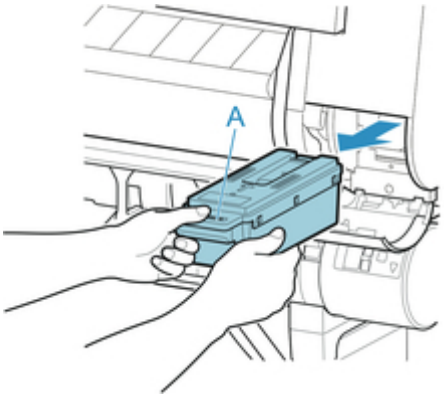

Important

- A used maintenance cartridge is heavy. Always grasp the cartridge firmly and keep the cartridge level during removal and storage. If you drop a used maintenance cartridge or store it at an angle, ink may leak and cause stains.

4. Put used maintenance cartridge in supplied plastic bag and store on flat surface.

5. Check the top and bottom of the maintenance cartridge, place in the box, and store the box on a flat surface.

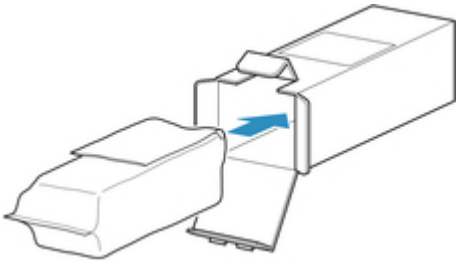

Important

- Always put the used maintenance cartridge back in the box and store the box on a flat surface.

Note

- Dispose of the used maintenance cartridge in accordance with local regulations.

6. Wipe away any soiling on the maintenance cartridge cover.

Important

- Support the maintenance cartridge cover from underneath as you wipe it.

7. Keeping the new maintenance cartridge level, insert it all the way in.

The maintenance cartridge is initialized.

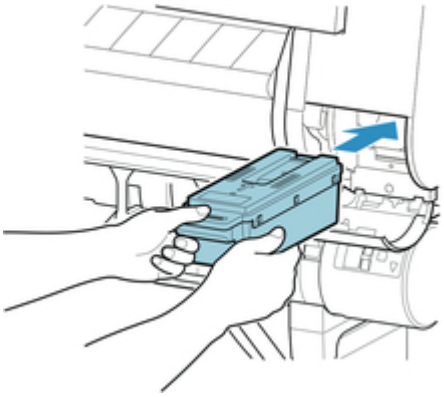

Important

- Do not remove the maintenance cartridge during initialization immediately after replacing the maintenance cartridge. The maintenance cartridge may become damaged.

8. Close maintenance cartridge cover.

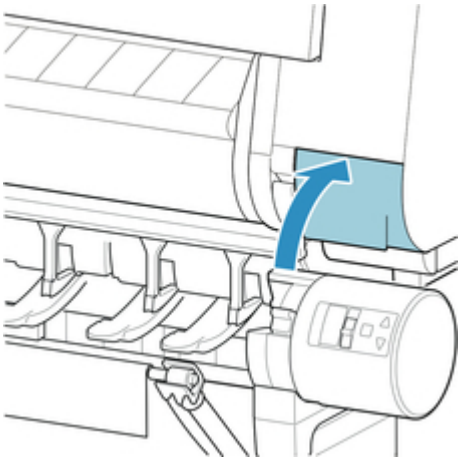

Checking the Remaining Maintenance Cartridge Capacity

The maintenance cartridge absorbs excess ink from print head cleaning. You can confirm the remaining capacity of the maintenance cartridge by checking the touch screen.

1. Flick Home screen and tap **Maintenance**.

   ➡ Touch Screen

   The **Maintenance** screen appears.

2. Tap **Maintenance cartridge info**.

   The **Maintenance cartridge info** screen appears.

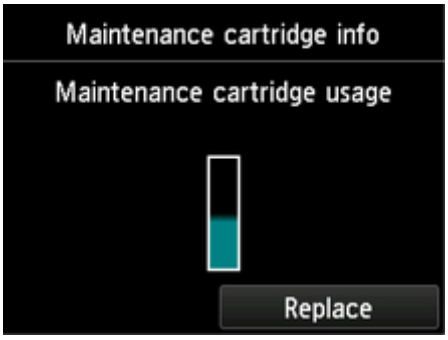

If the touch screen indicates to replace the maintenance cartridge, replace the maintenance cartridge. If a message appears indicating to check the remaining capacity of the maintenance cartridge, or before tasks that deplete much of the capacity such as head cleaning or preparations to move the printer, check the remaining maintenance cartridge capacity and prepare a new maintenance cartridge as needed.

➡ Replacing the Maintenance Cartridge

When to Replace the Maintenance Cartridge

Replace or prepare to replace the maintenance cartridge in the following situations.

If Maintenance Cartridge Confirmation Message Appears on Touch Screen

When the maintenance cartridge is almost empty, the **Status** lamp lights orange and a notification message will appear on the touch screen. You can continue to print, but check the remaining maintenance cartridge capacity and prepare to replace the maintenance cartridge with a new one.

➡ Checking the Remaining Maintenance Cartridge Capacity

When the maintenance cartridge capacity is drastically depleted

Print head cleaning, print head replacement, and preparations to transfer the printer deplete much of the maintenance cartridge capacity. (In particular, preparing to move the printer depletes a lot of the capacity.)

Check the remaining maintenance cartridge capacity before this maintenance and replace the maintenance cartridge if necessary.

If Message for Maintenance Cartridge Replacement Appears on Touch Screen

When the maintenance cartridge runs out, the **Status** lamp blinks orange, a message regarding maintenance cartridge replacement appears on the touch screen, and printing is disabled. Replace the maintenance cartridge with a new one.

Cutter Blade

➡ Cutter Blade

➡ Replacing the Cutter Blade

Cutter Blade

When purchasing, check the Model number.

This cutter blade comes with a part for securing the cutter blade during installation.

Shape	Model number
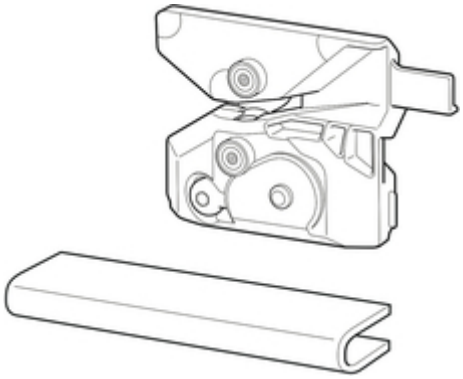	CT-07

Note

- For instructions on replacing the cutter blade, see "Replacing the Cutter Blade."

Replacing the Cutter Blade

Compatible cutter blade

For details on compatible cutter blade, see "Cutter Blade."

Selecting Menu for cutter blade Replacement

1. Flick Home screen and tap **Maintenance**.

   Touch Screen

   The **Maintenance** screen appears.

2. Tap **Replace cutter blade unit**.

   A confirmation message appears.

3. Tap **Yes**.

   The Carriage moves and after it stops moving, instructions appear on the touch screen.

   Note

   - If you do not take action within 2 minutes, cutter blade replacement is canceled. In this case, repeat the procedure.

Replacing cutter blade

1. Open top cover.

   The cutter blade replacement procedure appears on the touch screen.

   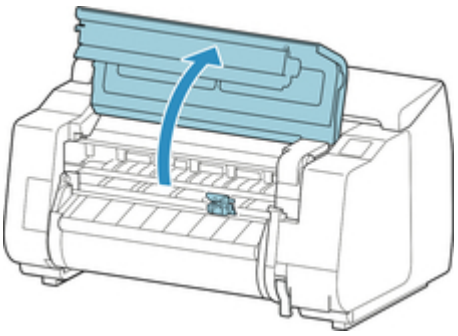

2. If cutter blade is dirty, use damp cloth that you have wrung out completely to wipe it clean.

   Important

   - Never touch the linear scale (A), carriage shaft (B), or ink tube stabilizer (C). Touching may damage them.

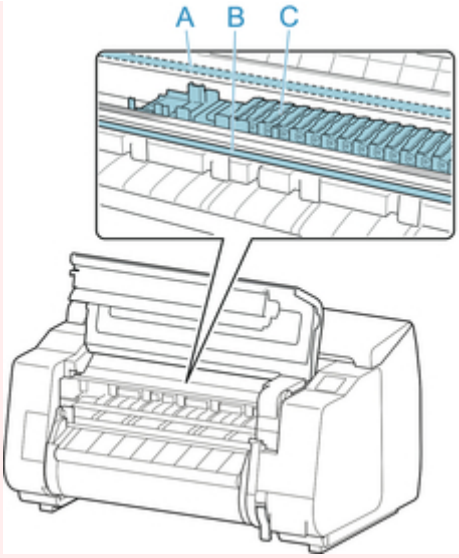

3. Turn hex screw with hex wrench until loose.

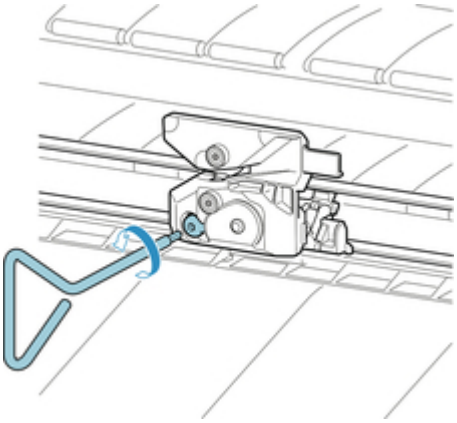

4. Remove cutter blade while holding A.

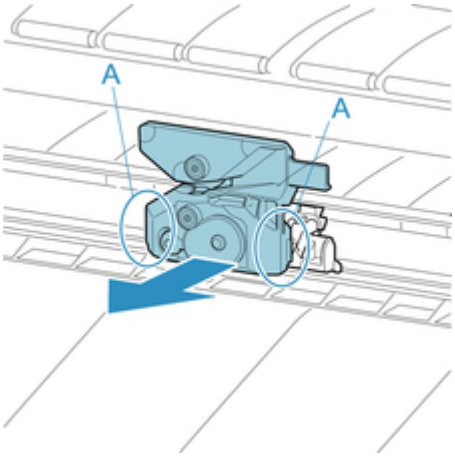

Caution

- Never touch any part other than A. This may stain your hands or cause injury. Additionally, this may damage the printer.

- Do not disassemble the cutter blade. Touching the blade may cause injury.

Note

- Dispose of the used cutter blade in accordance with local regulations.

5. Install new cutter blade while aligning A to B and C to D.

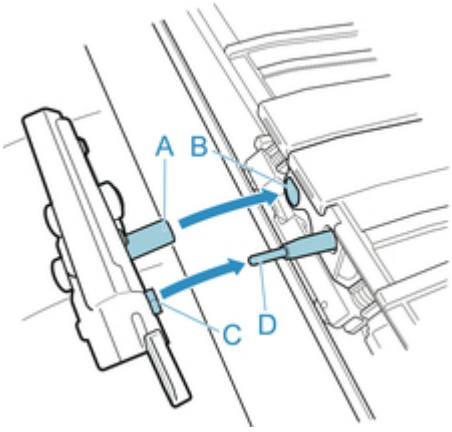

6. Install while aligning fixing part included with replacement cutter blade with center of cutter blade.

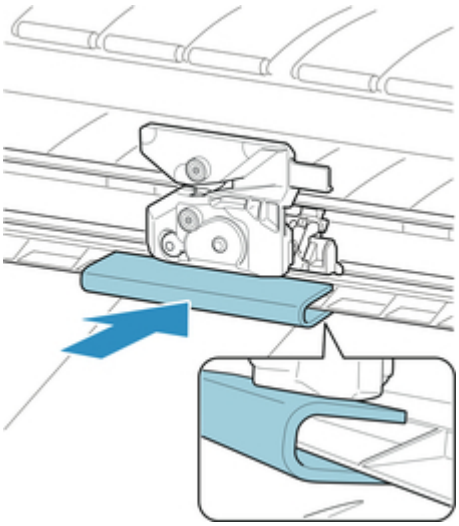

7. Turn hex screw until securely fixed.

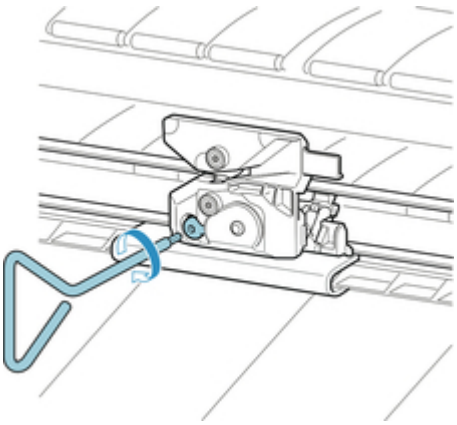

Important

- After the cutter blade is secured, check that the cutter blade does not come off. If the cutter blade comes off, this may damage the printer.

8. Remove fixing part.

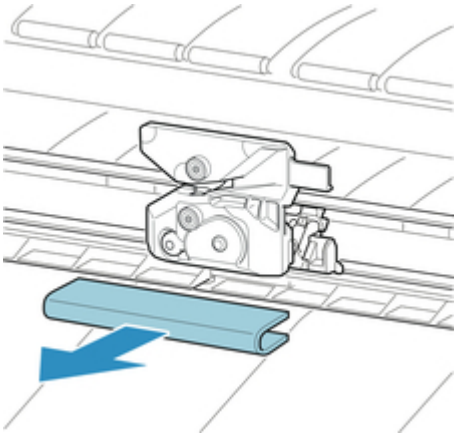

Important

- Always remove the fixing part. Operating with the part installed may damage the printer.

9. Close top cover.

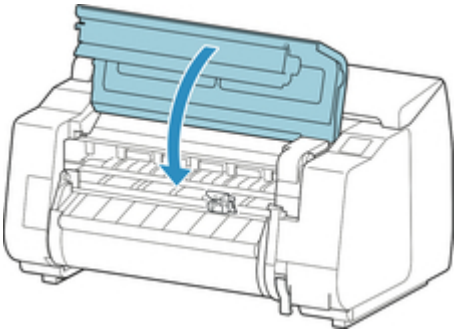

10. A confirmation message will appear.

Tap **Yes**.

Performing Maintenance Functions from Your Computer (Mac OS)

- Cleaning the Print Heads
- Printing a Nozzle Check Pattern
- Adjusting the Paper Feed Volume

Cleaning the Print Heads

The print head cleaning and Cleaning functions allow you to clear up clogged print head nozzle. Perform print head cleaning if printing is faint or a specific color fails to print, even though there is enough ink.
If you perform Cleaning and the condition still does not improve, perform system cleaning.

The procedure for cleaning is as follows:

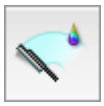

Cleaning

1. Select **Cleaning** from the pop-up menu on the Canon IJ Printer Utility3

2. Click the **Cleaning** icon

   The confirmation message appears.
   Before running the cleaning, check the following items:

   On some printer models, pressing the tank cover open button on the printer opens the tank cover.
   Check the following items for each ink. Then, if necessary, perform **Cleaning**.

   - Is there ink remaining in the tank?
   - Did you push in the ink tank completely until you heard a clicking sound?
   - If the orange tape is there, has it been peeled off completely?
     Any remaining tape will hinder ink output.
   - Did you install the ink tanks in their correct positions?

3. Execute cleaning

   Make sure that the printer is on and then click **OK**.

   Print head cleaning starts.

Important

- **Cleaning** consumes a small amount of ink.
  Cleaning the print head frequently will rapidly deplete your printer's ink supply. Consequently, perform cleaning only when necessary.

System Cleaning

Execute **System Cleaning** if the status does not improve even after **Cleaning** is performed.

1. Select **Cleaning** from the pop-up menu on the Canon IJ Printer Utility3

2. Click the **System Cleaning** icon

   The confirmation message appears.
   Before running the system cleaning, check the following items:

Check that the printer power is on. Then press the tank cover open button on the printer and open the tank cover.
Check the following items for each ink.

- Is there ink remaining in the tank?
- Did you push in the ink tank completely until you heard a clicking sound?
- If the orange tape is there, has it been peeled off completely?
  Any remaining tape will hinder ink output.
- Did you install the ink tanks in their correct positions?

In addition, **System Cleaning** consumes an extremely large amount of ink.
Before executing this function, check the items below. Then, if you feel it necessary, execute **System Cleaning**.

- Did you use **Nozzle Check** to check the nozzle status and was there a problem?
- Did the status remain unchanged even after **Cleaning** was executed?

3. Execute system cleaning

   Make sure that the printer is on and then click **OK**.

   System cleaning starts.

Important

- **System Cleaning** consumes an extremely large amount of ink.
  Executing system cleaning frequently will rapidly deplete your printer's ink supply. Therefore, execute system cleaning only when necessary.

Note

- When **Cleaning** or **System Cleaning** is complete, perform a **Nozzle Check** and confirm the results of cleaning.

Related Topic

- Printing a Nozzle Check Pattern

Printing a Nozzle Check Pattern

The nozzle check function allows you to check whether the print head is working properly by printing a nozzle check pattern. Print the pattern if printing becomes faint, or if a specific color fails to print.

The procedure for printing a nozzle check pattern is as follows:

Nozzle Check

1. Select **Test Print** from the pop-up menu on the Canon IJ Printer Utility3

2. Click the **Nozzle Check** icon

   The confirmation message appears.
   Before printing the nozzle check pattern, check the following items:

   On some printer models, pressing the tank cover open button on the printer opens the tank cover.
   Check the following items for each ink. Then, if necessary, perform **Nozzle Check**.

   - Is there ink remaining in the tank?
   - Did you push in the ink tank completely until you heard a clicking sound?
   - If the orange tape is there, has it been peeled off completely?
     Any remaining tape will hinder ink output.
   - Did you install the ink tanks in their correct positions?

3. Load paper in the printer

   Select the paper feed position when the dialog appears.

4. Print a nozzle check pattern

   Make sure that the printer is on and click **OK**.
   Printing of the nozzle check pattern begins.

5. Check the print result

   Check the print results.

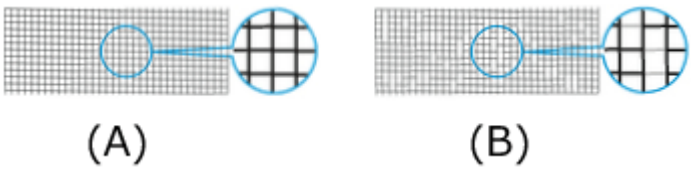

(A) As long as the horizontal lines are in line, and not missing, the nozzle is working normally.
(B) Where the horizontal lines are not in line or are missing, the color nozzle is blocked.

Important

- When using connected to the network, the **Test Print** is not displayed on OS X Mountain Lion v10.8, or OS X Lion v10.7.

Note

- Because CO is colorless, it is printed over a black ink pattern. Check whether the CO pattern contains horizontal streaks (A) in the dark gray area.

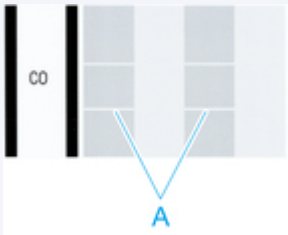

- From the nozzle check pattern printing results, if it becomes patchy or there are areas that cannot be printed, use **Cleaning** to clean the print heads.

Related Topic

- Cleaning the Print Heads

Adjusting the Paper Feed Volume

When different color figures are found in the print results or the length of the lines printed in the line feed direction is not accurate, the printing results can be improved by adjusting the lined feed volume.

Here, we explain the procedure for adjusting the line feed volume.

Paper Feed Amount Adjustment

1. Select **Test Print** from the pop-up menu on the Canon IJ Printer Utility3

2. Click the **Paper Feed Amount Adjustment** icon

   Adjust the paper feed volume.

Important

- When using connected to the network, the **Test Print** is not displayed on OS X Mountain Lion v10.8, or OS X Lion v10.7.

Cleaning the Printer

- Cleaning the Printer Exterior
- Cleaning Inside the Top Cover
- Cleaning the Roll Unit
- Cleaning the Print Head

Cleaning the Printer Exterior

Clean the printer regularly to maintain better printing quality and help prevent problems.

To ensure a comfortable working environment, clean the printer exterior about once a month.

1. Turn printer off.

   ➡ Turning the Printer On and Off

2. Unplug the power cord from the outlet.

   Caution

   - Always turn off the printer and unplug the power cord before cleaning or maintenance. Accidentally leaving the printer on poses a risk of injury if you touch moving parts inside the printer.

3. Wipe away any residue and paper dust with damp cloth that you have wrung out completely and wipe dry with dry cloth.

   - Clean the printer exterior and the power cord plug.

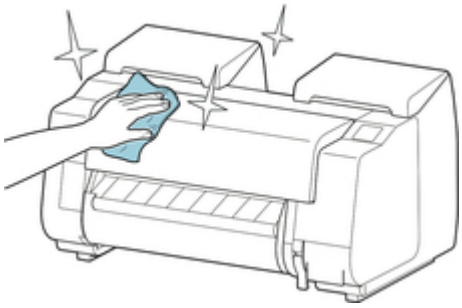

   - Open top cover and output guide and clean parts that come in contact with paper (A, B).

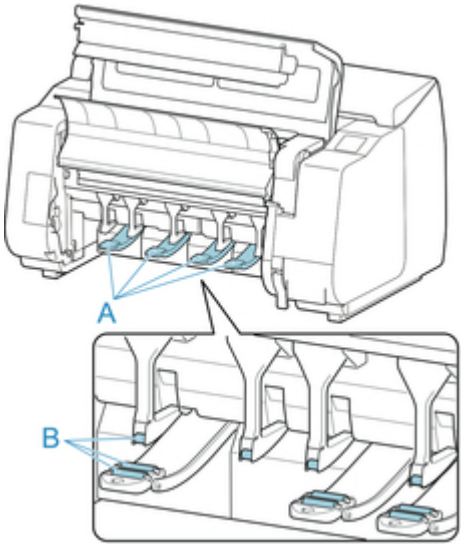

Warning

- Never use flammable solvents such as alcohol, benzene, or thinner. If these substances come into contact with electrical components inside the printer, there is a risk of fire or electrical shock.

Important

- If the output guide is dirty, it may soil the edge of the paper when the paper is cut. We recommend cleaning the output guide even if it does not appear dirty, because it may actually be covered with paper dust.

  Cleaning Inside the Top Cover

4. Plug the power cord into the outlet.

Cleaning Inside the Top Cover

Clean inside the top cover about once a month to maintain better printing quality and help prevent problems.

Also clean inside the top cover in the following situations to ensure optimal operation.

- If the printed surface or the underside of paper is dirty after printing
- After you have used up a roll
- After borderless printing
- After printing on small paper
- After printing on paper that generates a lot of cutting debris
- If you have replaced the roll
- After printing on paper that generates a lot of paper dust

Important

- If the platen inside the top cover becomes dirty, it may soil the underside of paper. We recommend cleaning the platen after borderless printing or printing on small paper.
- If the output guide is dirty, it may soil the edge of the paper when the paper is cut. We recommend cleaning the output guide even if it does not appear dirty, because it may actually be covered with paper dust.

1. Flick Home screen and tap **Maintenance**.

   Touch Screen

   The **Maintenance** screen appears.

2. Tap **Platen cleaning**.

   A confirmation message appears.

3. Tap **Yes**.

   The Carriage moves and after it stops moving, instructions appear on the touch screen.

4. Open top cover.

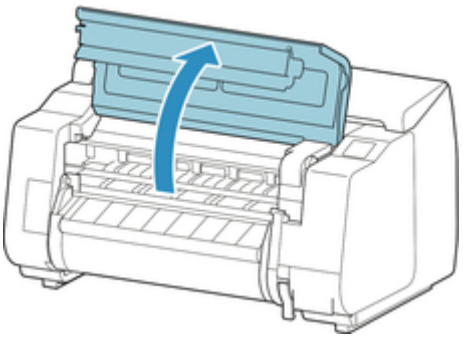

5. If paper dust has accumulated in vacuum holes (A) on platen or in borderless printing ink grooves (B), use cleaning brush (C), provided with printer, to wipe it away.

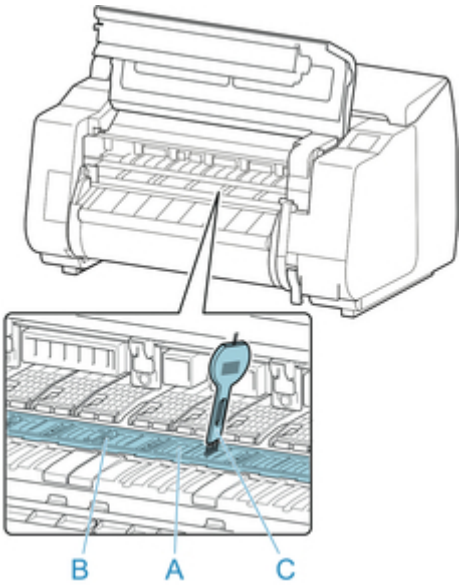

Important

- Never touch the linear scale (A), carriage shaft (B), or ink tube stabilizer (C). Touching may damage them.

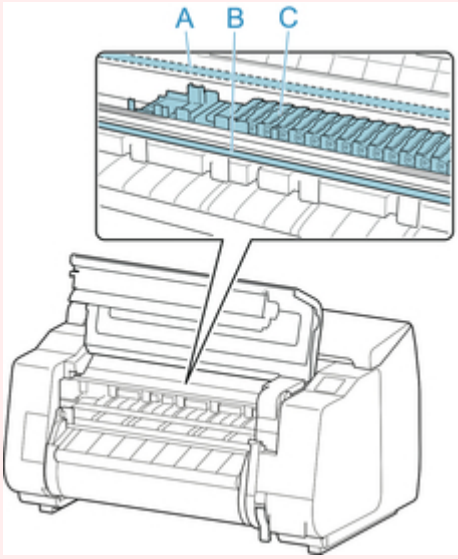

Note

- If the cleaning brush is dirty, rinse it in water.

6. Using a damp cloth that you have wrung out completely, wipe inside the top cover to clean it. Wipe away any ink residue and paper dust (debris from cutting) on top cover roller (A), paper retainer (B), entire platen (C), borderless printing ink grooves (D), periphery of left and right ink suction holes (E, F), and output guide (G), and so on.

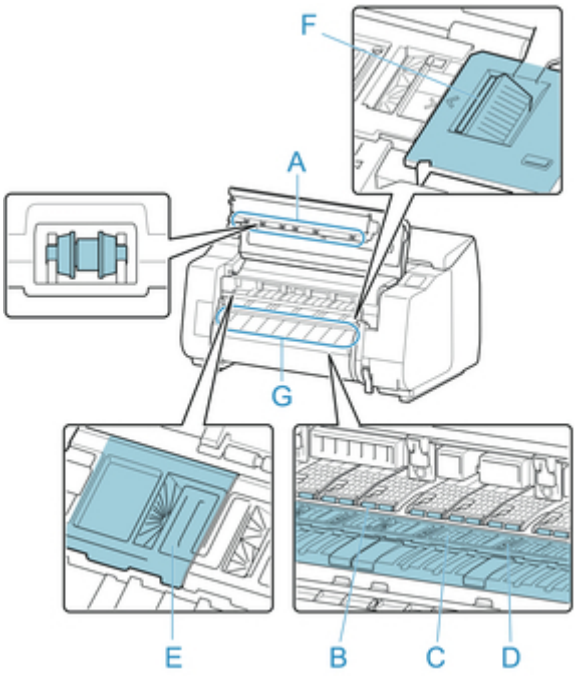

Warning

- Never use flammable solvents such as alcohol, benzene, or thinner. If these substances come into contact with electrical components inside the printer, there is a risk of fire or electrical shock.

Important

- Do not use a dry cloth to wipe inside the top cover. This may create a static charge, which may attract dust and affect the printing quality.

7. Close top cover.

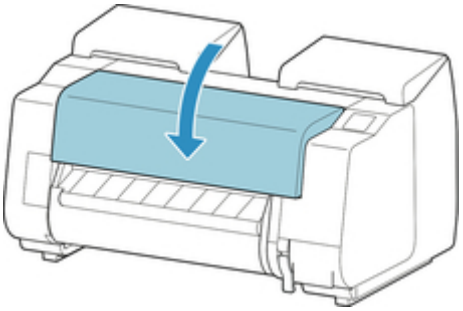

Cleaning the Roll Unit

About once a month, clean the roll unit to ensure optimal operation.

1. Remove any roll paper loaded in roll unit.

   Removing the Lower Roll from the Roll Unit (Option)

2. Turn printer off.

   Turning the Printer On and Off

3. Unplug power cord from outlet.

   Caution

   - Always turn off the printer and unplug the power cord before cleaning or maintenance. Accidentally leaving the printer on poses a risk of injury if you touch moving parts inside the printer.

4. Wipe away any residue and paper dust from areas (A, B) that come in contact with paper with damp cloth that you have wrung out completely, and wipe dry with dry cloth.

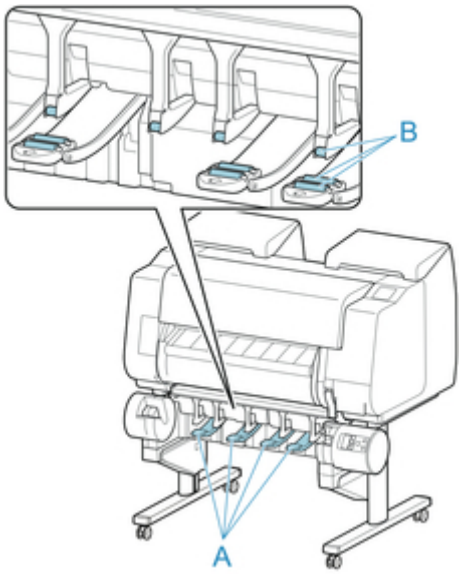

   Warning

   - Never use flammable solvents such as alcohol, benzene, or thinner. If these substances come into contact with electrical components inside the roll unit, there is a risk of fire or electrical shock.

5. Plug power cord into outlet.

Other Maintenance

- Preparing to Transfer the Printer
- Reinstalling the Printer

Preparing to Transfer the Printer

To protect the internal parts in transit, always follow these steps before transferring the printer to a new location.

For details on packing the printer and installing it after transfer, see "Reinstalling the Printer."

Important

- Be sure to contact your Canon dealer before transferring the printer to a new location. Ink may leak and damage the printer if you do not prepare the printer correctly and it is tipped or stood on end in transit.

Note

- The maintenance cartridges needs to be replaced when you execute the **Prepare to transportation** menu. Prepare the maintenance cartridge in advance while referring to the table below. The number of maintenance cartridge required varies depending on the amount remaining in the maintenance cartridge being used.
- If you can move the printer in a level state using casters or something similar, you do not need to execute **Prepare to transportation**.
- Always follow the instructions of the service representative when preparing to transfer the printer.

Prepare to transportation Menu	**Usage Examples**	**Transport and Storage In Low Temperature Environments**	**Permitted Angle of Inclination**	**Required Maintenance Cartridges**
Move indoors on the same floor	Move indoors by carrying	No	All directions: within 30°	1-3
Move indoors to a different floor	Moving the printer while temporarily tilting it such as when using the stairs	No	All directions: within 90°	1-3
Transport outdoors	Transport By Vehicle	Yes	All directions: within 90°	3

Remove paper

1. Remove the paper.
   - Rolls
     - Removing the Upper Roll from the Printer
     - Removing the Lower Roll from the Roll Unit (Option)
   - Sheet
     - Removing Sheets

Selecting Menu for **Prepare to transportation**

1. If touch screen indicates to replace maintenance cartridge, replace maintenance cartridge.

   ➡ Replacing the Maintenance Cartridge

2. Flick Home screen and tap **Maintenance**.

   ➡ Touch Screen

   The **Maintenance** screen appears.

3. Tap **Prepare to transportation**.

4. Select and tap transfer level.

   Displays the confirmation screen.

5. Tap **Yes**.

   The printer is now prepared for transfer.

   When the preparation is finished, instructions appear on the touch screen.

   Remove the ink tanks before packing the printer.

   Important

   - If consumables must be replaced, a message appears on the touch screen, and preparation is disabled. If the message appears, tap **OK** and contact your Canon dealer for assistance.

Removing Ink Tanks

1. Open left and right ink tank covers to remove all ink tanks.

   ➡ Replacing Ink Tanks

2. Push down release lever (A) as shown as you gently return all ink tank lock levers to their original positions.

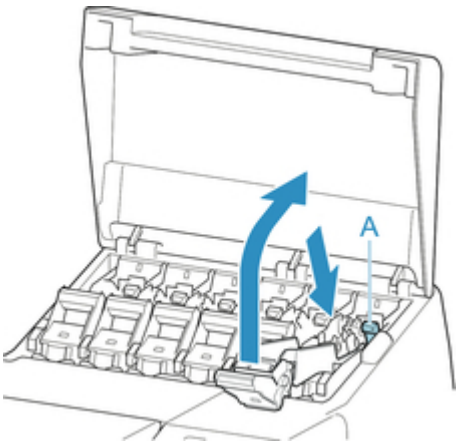

3. Close ink tank covers.

   At this point, ink is drawn out from inside the tubes.

   A confirmation message will appear when the process is finished.

   Important

   - Do not remove the maintenance cartridge except when the message indicating replacement is displayed.

     If you remove the maintenance cartridge while ink is being removed, the ink may leak out.

4. Replace maintenance cartridge currently being used with new maintenance cartridge.

   Replacing the Maintenance Cartridge

5. Press **ON** button and turn off printer.

Pack the printer

1. Disconnect power cord and interface cable.

   Important

   - Turn off the printer before you unplug it. Unplugging the printer before it is off and moving it may damage the printer. If you accidentally unplug the printer, plug it in again, reinstall the ink tanks, and follow this procedure again.

2. Open top cover.

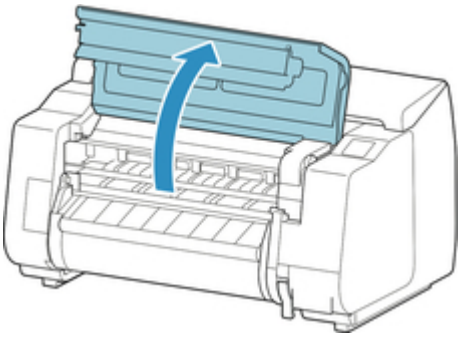

3. Grasp Belt and insert Belt Stopper into position shown.

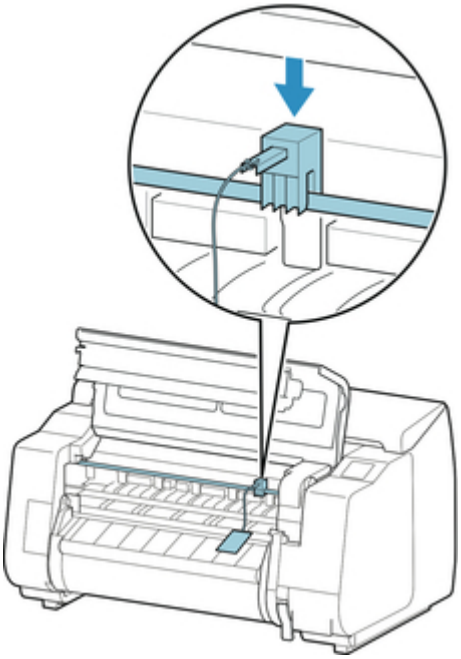

Important

- Attach the Belt Stopper that was removed and stored after initial installation. Neglecting to attach the Belt Stopper may damage the printer.
- Never touch the linear scale (A), carriage shaft (B), or ink tube stabilizer (C). Touching may damage them.

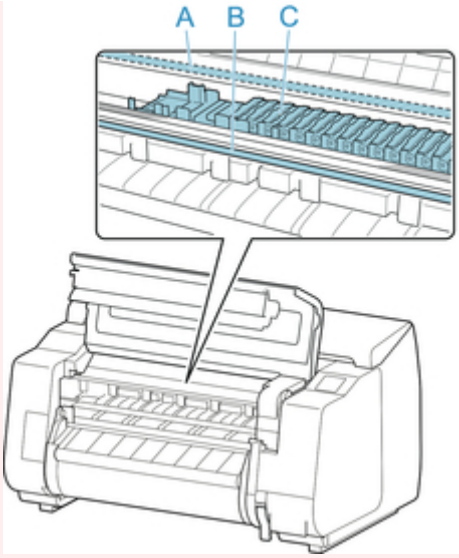

4. Close top cover.

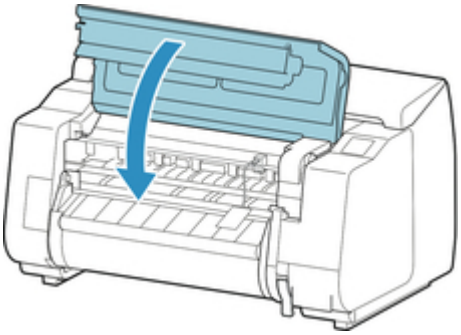

5. Tape down printer covers to secure them, in the reverse order of tape removal during installation.

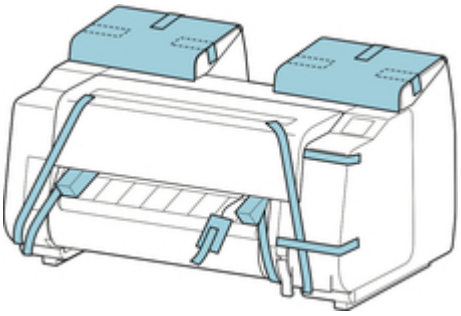

6. Remove basket by reversing installation procedure.

7. Remove the Stand by reversing the installation procedure, when it was attached to the printer.

8. Disassemble and repackage the Stand by following the installation procedure in reverse.

9. Repack Roll Holder, holder stopper, and printer in shipping materials, and then package them in shipping box.

Reinstalling the Printer

The basic workflow for reinstalling the printer is as follows.

For detailed instructions, see the Setup Guide.

Assemble the stand

1. Referring to the Printer Stand Setup Guide, assemble the Stand.

Caution

- The Stand must be assembled by at least two people on a flat surface. Attempting assembly by yourself poses a risk of injury or bending the Stand.
- When assembling the Stand, lock the casters. In addition, always unlock the casters before moving the assembled Stand. Attempting to move the stand when the casters are locked poses a risk of injury or damage to the location site.

Install the printer

1. Mount the printer on the assembled Stand and tighten the screws firmly.

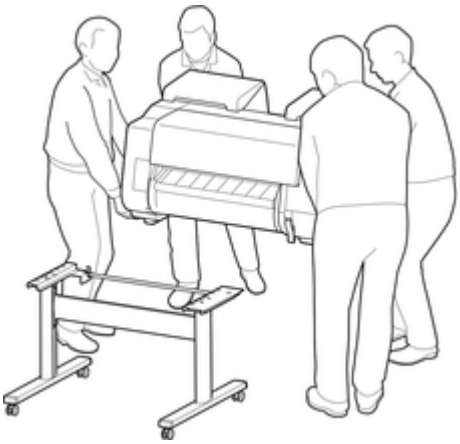

Caution

- Moving the printer requires at least six people, holding it on both sides. Be careful to avoid back strain and other injuries.
- When carrying the printer, hold it securely by the carrying grips on the bottom left, right, and rear. The printer may be unsteady if you hold it at other positions, which poses a risk of injury from dropping the printer.

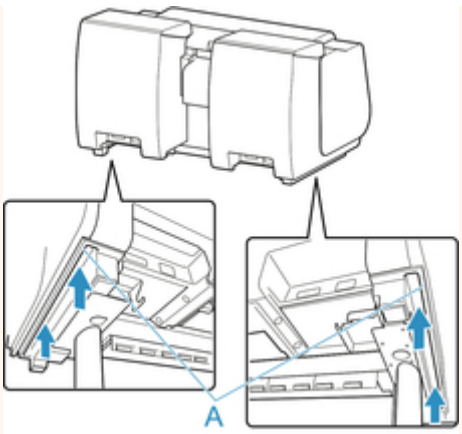

2. Remove tape and packaging material attached to the printer. Also open the top cover and remove stoppers and spacers inside the printer.

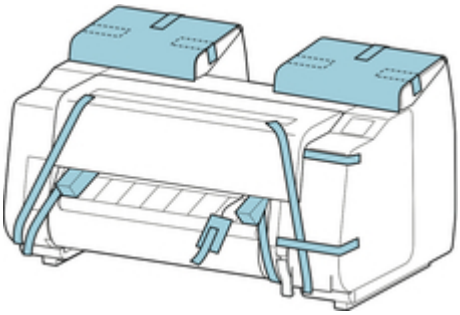

3. If using optional roll unit, refer to Setup Guide provided with roll unit and attach roll unit to Stand.

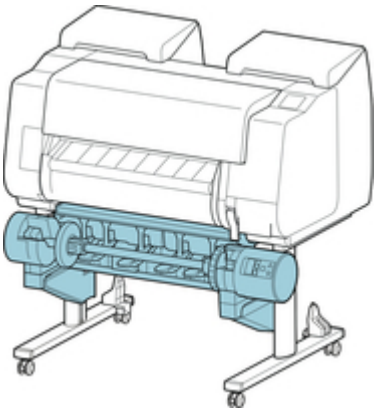

4. Refer to Printer Stand Setup Guide and attach basket to Stand.

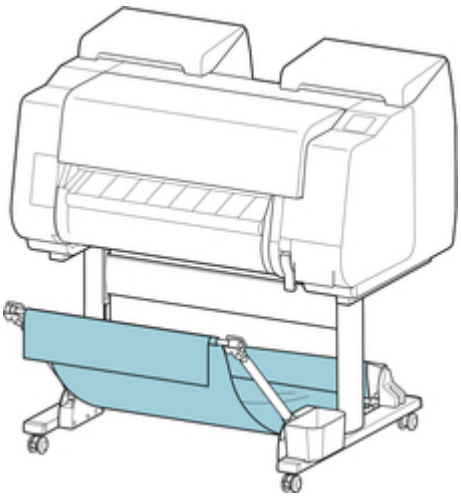

5. Connect the power cord to the power cord connector on the back of the printer.

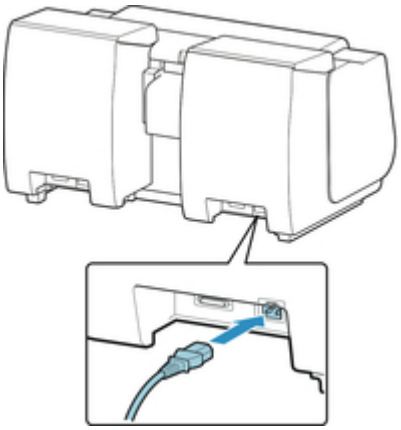

6. Plug the power cord into the outlet.

7. Press the power button to turn the printer on.

   When "**Do you want to install the transported printer? Do not install the ink tanks yet.**" appears, tap **Yes**.

8. When instructions for loading ink tank appear on touch screen, open ink tank cover and load ink tank.

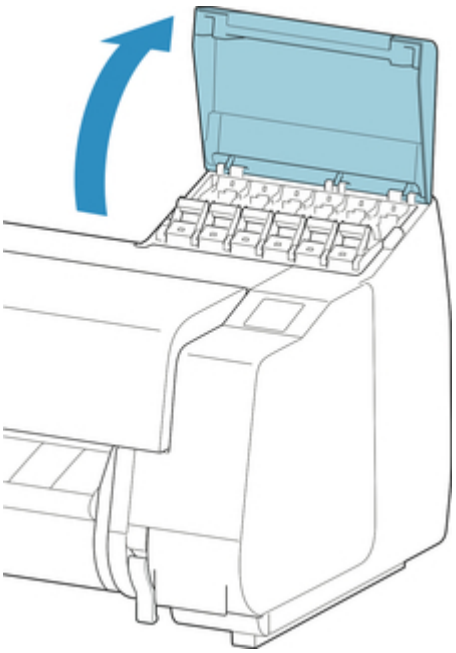

9. Attach the Roll Holder to the Roll Media.

   (See "Loading Rolls on the Roll Holder.")

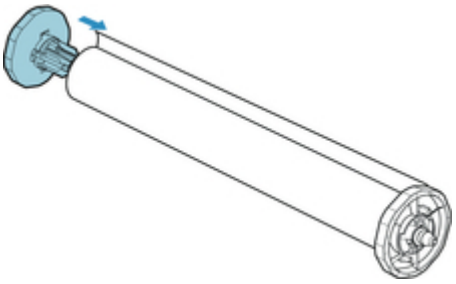

10. Load the Roll Media in the printer.

    (See "Loading the Upper Roll on the Printer.")

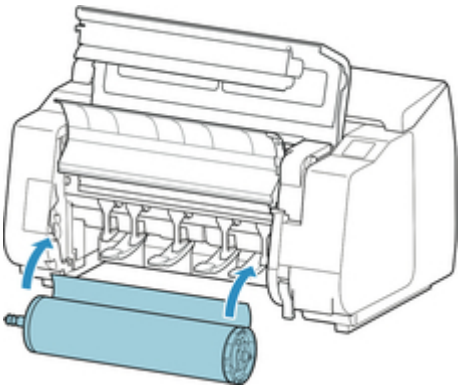

11. Install the software.

    Note that the driver installation procedure varies depending on the type of connection.

    (See "Installing the Printer Driver" (Windows).)

(See "Installing the Printer Driver" (Mac OS).)

Specifications

- **Printer Specifications**
  - Specifications
  - Print Area

Printer Specifications

➡ Specifications

➡ Print Area

Specifications

Important

- The following values may vary depending on the operating environment.

Printer

Power supply		100–240 V AC (50/60 Hz)
Power consumption	When printing	Approx. 88 W
	In Sleep mode	Approx. 1.8 W(*1)
	When power is off	Approx. 0.5 W(*1) (*2)
Operating environment	Temperature	59 to 86°F (15 to 30°C)
	Humidity	10 to 80% RH (with no condensation)
Dimensions (W × D × H)	Main unit only	Approx. 43.8 × 28.9 × 24.8 in (1110 × 734 × 628 mm)
	Main unit and Stand (when basket is not used)	Approx. 43.8 × 30.2 × 46 in (1110 × 766 × 1168 mm)
	Main unit and Stand (when using basket: basket Position 1)(*3)	Approx. 43.8 × 38.8 × 46 in (1110 × 984 × 1168 mm)
	Main unit and Stand (when using basket: basket Position 2/4/5)(*3)	Approx. 43.8 × 48.2 × 46 in (1110 × 1222 × 1168 mm)
	Main unit and Stand (when using basket: basket Position 3)(*3)	Approx. 43.8 × 56.5 × 46 in (1110 × 1434 × 1168 mm)
Weight	Main unit only (does not include print head and ink tanks)	Approx. 185 lb (84 kg)
	Stand	Approx. 37 lb (17 kg)
	Roll unit	Approx. 35 lb (16 kg)
Space for installation (W × D × H)	When not using Stand	Approx. 59.5 × 56.5 × 40.2 in (1510 × 1434 × 1020 mm)
	When using Stand	Approx. 59.5 × 66.3 × 61.5 in (1510 × 1684 × 1560 mm)
Related standards	International ENERGY STAR Program	

*1:When using USB connection

*2:The printer uses a trace amount of power even when turned off. To stop all power consumption, turn off the printer and unplug the power cord.

*3:For details on the basket position, see "Example Basket Configurations."

Printing performance

Print method	Bubblejet
Maximum resolution	2400 dpi (horizontally) (*1) × 1200 dpi (vertically)
Print head	PF-10
Number of nozzles	18432 nozzles (1536 nozzles per color)

*1:Prints with a minimum 1/2400 inch dot pitch between ink droplets.

Memory and hard disk

Memory	3 GB	
Hard disk capacity	320 GB	
	Personal mail boxes (Permanent storage area)	140 GB
Print job storage capacity	Common Box	100 jobs
	Personal Boxes	100 jobs

Interface

You can use both USB and LAN at the same time.

You cannot use wireless LAN and wired LAN at the same time.

USB	Hi-Speed USB(*1)	
USB memory	USB flash drive	
LAN	Wired LAN	IEEE802.3ab (1000BASE-T) / IEEE802.3u (100BASE-TX) / IEEE802.3 (10BASE-T)
	Wireless LAN	IEEE802.11n / IEEE802.11g / IEEE802.11b (*2)

*1:To use Hi-Speed USB, your computer must support Hi-Speed USB.
Additionally, the Hi-Speed USB interface is completely backward compatible with USB 1.1, so the printer can be connected even if the computer interface is USB 1.1.

*2:A connection can be established by configuring Standard setup, WPS (Wi-Fi Protected Setup), WCN (Windows Connect Now), Cableless setup.

Network Specifications

Communication protocols	SNMP (Canon-MIB compatible), HTTP, TCP/IP (IPv4/IPv6)

Wired LAN specifications	Compliance standards	IEEE802.3ab (1000BASE-T) / IEEE802.3u (100BASE-TX) / IEEE802.3 (10BASE-T)
	Transmission speed	10 Mbps / 100 Mbps / 1000 Mbps (automatically selected)
Wireless LAN specifications	Compliance standards	IEEE802.11n / IEEE802.11g / IEEE802.11b
	Frequency range	2.4 GHz
	Channels	1 to 11 or 1 to 13 Varies by country and region.
	Effective range	Indoor 164 feet (50 m) Varies according to environmental conditions.
	Security	WEP (64/128 bit) WPA-PSK (TKIP/AES) WPA2-PSK (TKIP/AES)
	Setup	Standard setup WPS (push button method/PIN code method) WCN (WCN-NET) Cableless setup
	Other	Admin password

Operating Conditions

If operating conditions of the operating system are high, follow those.

Windows	Compatible Operating System (Standard supplied printer driver)	32-bit version	Windows 10 Windows 8.1, Windows 8 Windows 7 Windows Vista Windows Server 2008 Use the latest Service Pack available.
		64-bit version	Windows 10 Windows 8.1, Windows 8 Windows 7 Windows Vista Windows Server 2008, Windows Server 2008 R2 Windows Server 2012, Windows Server 2012 R2

			Use the latest Service Pack available. Windows RT (Windows 8 ARM architecture) not supported.
	Recommended operating environment(*1)	CPU	Pentium 4 or later, or Athlon 64 or later processor
		Memory	1 GB or more
		Free hard disk space	20 GB or more
Mac OS	Compatible Operating System (Standard supplied printer driver)	OS X v10.7.5 to OS X v10.11	
	Recommended operating environment(*1)	CPU	Intel multi-core processor or later
		Memory	2 GB or more
		Free hard disk space	20 GB or more

*1:Depending on the application software and data being used, the printer may not output correctly even with the above environmental conditions.

- An Internet connection is required to use the Online Manual.
- To install the software while using Windows, you must have a CD-ROM drive or a network connection.
- To install the software while using Mac OS, you must have a network connection.

Ink

For information on the ink the printer supports, see "Ink Tanks."

Paper

For details on the compatible media types, see "Paper Information List."

Paper width	For details on the paper widths supported by the printer, see "Paper Sizes."	
Minimum paper length		8.00 in (203.2 mm)
Maximum printable length	Rolls(*1)	59 feet (18 m)
	Sheets	5.2 feet (1.6 m)(*2)
Thickness	Rolls	3-31 mil (0.07-0.8 mm)
	Sheets	3-31 mil (0.07-0.8 mm)
Roll maximum outer diameter		6.7 in (170 mm) or shorter

Supported paper core inner diameter		2 in/3 in (50.8 mm/76.2 mm)
Print area	For details about Print Area, see "Print Area."	

*1:Varies depending on the operating system or application.

*2:When using stand

Print Area

A margin required by the printer is added with respect to the size of paper loaded in the printer. Except in borderless printing, the actual printing area corresponds to the paper size minus the space for this margin.

Note

- Printable Area: The area that can be printed.
- For borderless printing with roll paper, the margin is 0 in (0 mm).

  However, depending on the paper size, minor margins may be available.

  ➡ Prints without Edges Based on the Scenarios(Windows)

  ➡ Prints without Edges Based on the Scenarios(Mac OS)
- Recommended Print Area: We recommend printing within this area.
- To match the document size with the actual printing area, print on oversize paper with the required margin added.

  ➡ Printing to Oversized Paper Sizes(Windows)

  ➡ Printing to Oversized Paper Sizes(Mac OS)

	Margins of Printable Area			Margins of Recommended Print Area		
	Top Edge	Bottom Edge	Sides	Top Edge	Bottom Edge	Sides
Sheets	0.2 in (3 mm)	0.8 in (20 mm)	0.2 in (3 mm)	0.8 in (20 mm)	0.8 in (20 mm)	0.2 in (3 mm)
Rolls	0.2 in (3 mm)	0.2 in (3 mm)	0.2 in (3 mm)	0.8 in (20 mm)	0.2 in (3 mm)	0.2 in (3 mm)

Sheets

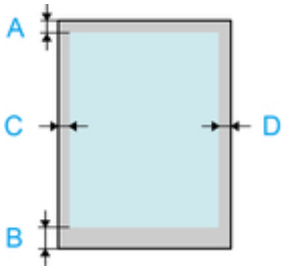

A. Top Edge

B. Bottom Edge

C. Left Edge

D. Right Edge

- Printable Area:
  A margin of 0.2 in (3 mm) on top, 0.8 in (20 mm) on bottom, and 0.2 in (3 mm) on left and right sides is required.
- Recommended Print Area:

A margin of 0.8 in (20 mm) on top, 0.8 in (20 mm) on bottom, and 0.2 in (3 mm) on left and right sides is required.

Rolls

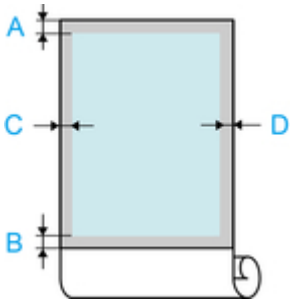

A. Top Edge

B. Bottom Edge

C. Left Edge

D. Right Edge

- Printable Area:
  A margin of 0.2 in (3 mm) on top and bottom and 0.2 in (3 mm) on left and right sides is required. For borderless printing, the margins on top, bottom, left, and right are 0 in (0 mm). For paper that supports borderless printing, see "Paper Information List."
- Recommended Print Area:
  A margin of 0.8 in (20 mm) on top, 0.2 in (3 mm) on bottom, and 0.2 in (3 mm) on left and right sides is required.

Safety

- Safety Precautions
- Regulatory Information
- WEEE (EU&EEA)

Safety Precautions

Choosing a location

- Never install the printer on an unstable or vibrating surface.
- Do not install the printer in locations that are very humid or dusty, in direct sunlight, outdoors, or close to a heating source.
  To avoid the risk of fire or electric shocks, use the printer under the operating environment specified in the Specifications.
- Do not place the printer on a thick rug or carpet.
- Do not place the printer with its back attached to the wall.
- We recommend ensuring ample space for installation.
- Do not install the printer near sources of strong electromagnetic fields, whether equipment that generates such fields or places where such fields occur.

Power Supply

- Ensure that the area around the power outlet is kept clear at all times so you can easily unplug the power cord if necessary.
- Never remove the plug by pulling on the cord.
  Pulling the cord may damage the power cord, leading to possible fire or electrical shock.
- Do not use an extension lead/cord.

Working Around the Printer

- Never put your hands or fingers in the printer while it is printing.
- Moving the printer requires at least six people, holding it on both sides. Be careful to avoid back strain and other injuries.
- When moving the printer, firmly grasp the Carrying Handles under each side. The printer may be unsteady if you hold it at other positions, which poses a risk of injury from dropping the printer.
- Do not place any object on the printer. Especially do not place metal objects (paper clips, staples, etc.) or containers of flammable solvents (alcohol, thinners, etc.) on top of the printer.
- Do not transport or use the printer on a slant, vertically or upside-down, as the ink may leak and damage the printer.

Print Heads/Ink Tanks/Maintenance Cartridges

- Keep ink tanks out of the reach of children. In case ink is accidentally licked or swallowed, rinse out mouth or give one or two glasses of water to drink. If irritation or discomfort occurs, obtain medical advice immediately.
- In case ink gets in contact with eyes, rinse with water immediately. In case ink gets in contact with skin, wash with soap and water immediately. If irritation to eyes or skin persists, obtain medical advice immediately.
- Never touch the electrical contacts on a print head after printing.
  The metal parts may be very hot and could cause burns.
- Do not throw ink tanks and maintenance cartridges into fire.
- Do not attempt to disassemble or modify the print head, ink tanks, and maintenance cartridges.
- Avoid dropping or shaking print head, ink tanks, and maintenance cartridges.

Regulatory Information

Lithium Battery

- Dispose of used batteries according to the local regulations.
- Risk of explosion if battery is replaced by an incorrect type.

Users in the U.S.A.

FCC Notice (U.S.A. Only)
For 120V, 60Hz model
Model Number: K10438 (Contains FCC Approved WLAN Module K30357)
Optional parts: Roll Unit RU-21

This device complies with Part 15 of the FCC Rules. Operation is subject to the following two conditions: (1) This device may not cause harmful interference, and (2) this device must accept any interference received, including interference that may cause undesired operation.

Note: This equipment has been tested and found to comply with the limits for a Class B digital device, pursuant to Part 15 of the FCC Rules. These limits are designed to provide reasonable protection against harmful interference in a residential installation. This equipment generates, uses and can radiate radio frequency energy and, if not installed and used in accordance with the instructions, may cause harmful interference to radio communications.
However, there is no guarantee that interference will not occur in a particular installation. If this equipment does cause harmful interference to radio or television reception, which can be determined by turning the equipment off and on, the user is encouraged to try to correct the interference by one or more of the following measures:

- Reorient or relocate the receiving antenna.
- Increase the separation between the equipment and receiver.
- Connect the equipment into an outlet on a circuit different from that to which the receiver is connected.
- Consult the dealer or an experienced radio/TV technician for help.

Use of a shielded cable is required to comply with Class B limits in Subpart B of Part 15 of the FCC Rules.

Do not make any changes or modifications to the equipment unless otherwise specified in the manual. If such changes or modifications should be made, you could be required to stop operation of the equipment.

FCC ID:AZDK30357

Changes or modifications not expressly approved by the party responsible for compliance could void the user's authority to operate equipment.

This transmitter must not be co-located or operating in conjunction with any other antenna or transmitter.

The equipment complies with FCC radiation exposure limits for at uncontrolled equipment. This equipment should be installed and operated with minimum distance at least 20cm between the radiator and persons body (excluding extremities: hands, wrists, feet and ankles) and must not be colocated or operated with any other antenna or transmitter.

Canon U.S.A., Inc.
One Canon Park

Melville, New York 11747
1-800-652-2666

Users in Canada

This device complies with Industry Canada license-exempt RSS standard(s). Operation is subject to the following two conditions:

(1) this device may not cause interference, and (2) this device must accept any interference, including interference that may cause undesired operation of the device.

This equipment complies with IC radiation exposure limits set forth for an uncontrolled environment and meets RSS-102 of the IC radio frequency (RF) Exposure rules. This equipment should be installed and operated keeping the radiator at least 20cm or more away from person's body (excluding extremities: hands, wrists, feet and ankles).

Pour les usagers résidant au Canada

Le présent appareil est conforme aux CNR d'Industrie Canada applicables aux appareils radio exempts de licence. L'exploitation est autorisée aux deux conditions suivantes :

(1) l'appareil ne doit pas produire de brouillage, et (2) l'utilisateur de l'appareil doit accepter tout brouillage radioélectrique subi, même si le brouillage est susceptible d'en compromettre le fonctionnement.

Cet équipement est conforme aux limites d'exposition aux rayonnements énoncées pour un environnement non contrôlé et respecte les règles d'exposition aux fréquences radioélectriques (RF) CNR-102 de l'IC. Cet équipement doit être installé et utilisé en gardant une distance de 20 cm ou plus entre le dispositif rayonnant et le corps (à l'exception des extrémités : mains, poignets, pieds et chevilles).

WEEE (EU&EEA)

Only for European Union and EEA (Norway, Iceland and Liechtenstein)

These symbols indicate that this product is not to be disposed of with your household waste, according to the WEEE Directive (2012/19/EU), the Battery Directive (2006/66/EC) and/or national legislation implementing those Directives. If a chemical symbol is printed beneath the symbol shown above, in accordance with the Battery Directive, this indicates that a heavy metal (Hg = Mercury, Cd = Cadmium, Pb = Lead) is present in this battery or accumulator at a concentration above an applicable threshold specified in the Battery Directive. This product should be handed over to a designated collection point, e.g., on an authorized one-for-one basis when you buy a new similar product or to an authorized collection site for recycling waste electrical and electronic equipment (EEE) and batteries and accumulators. Improper handling of this type of waste could have a possible impact on the environment and human health due to potentially hazardous substances that are generally associated with EEE. Your cooperation in the correct disposal of this product will contribute to the effective usage of natural resources. For more information about the recycling of this product, please contact your local city office, waste authority, approved scheme or your household waste disposal service or visit www.canon-europe.com/weee, or www.canon-europe.com/battery.

Nur für Europäische Union und EWR (Norwegen, Island und Liechtenstein)

Diese Symbole weisen darauf hin, dass dieses Produkt gemäß WEEE-Richtlinie (2012/19/EU; Richtlinie über Elektro- und Elektronik-Altgeräte), Batterien-Richtlinie (2006/66/EG) und nationalen Gesetzen zur Umsetzung dieser Richtlinien nicht über den Hausmüll entsorgt werden darf. Falls sich unter dem oben abgebildeten Symbol ein chemisches Symbol befindet, bedeutet dies gemäß der Batterien-Richtlinie, dass in dieser Batterie oder diesem Akkumulator ein Schwermetall (Hg = Quecksilber, Cd = Cadmium, Pb = Blei) in einer Konzentration vorhanden ist, die über einem in der Batterien-Richtlinie angegebenen Grenzwert liegt. Dieses Produkt muss bei einer dafür vorgesehenen Sammelstelle abgegeben werden. Dies kann z. B. durch Rückgabe beim Kauf eines neuen ähnlichen Produkts oder durch Abgabe bei einer autorisierten Sammelstelle für die Wiederaufbereitung von Elektro- und Elektronik-Altgeräten sowie Batterien und Akkumulatoren geschehen. Der unsachgemäße Umgang mit Altgeräten kann aufgrund potenziell gefährlicher Stoffe, die generell mit Elektro- und Elektronik-Altgeräten in Verbindung stehen, negative Auswirkungen auf die Umwelt und die menschliche Gesundheit haben. Durch Ihre Mitarbeit bei der umweltgerechten Entsorgung dieses Produkts tragen Sie zu einer effektiven Nutzung natürlicher Ressourcen bei. Um weitere Informationen über die Wiederverwertung dieses Produkts zu erhalten, wenden Sie sich an Ihre Stadtverwaltung, den öffentlich-rechtlichen Entsorgungsträger, eine autorisierte Stelle für die Entsorgung von Elektro- und Elektronik-Altgeräten oder Ihr örtliches Entsorgungsunternehmen oder besuchen Sie www.canon-europe.com/weee, oder www.canon-europe.com/battery.

Union Européenne, Norvège, Islande et Liechtenstein uniquement.

Ces symboles indiquent que ce produit ne doit pas être mis au rebut avec les ordures ménagères, comme le spécifient la Directive européenne DEEE (2012/19/UE), la Directive européenne relative à l'élimination des piles et des accumulateurs usagés (2006/66/CE) et les lois en vigueur dans votre pays appliquant ces directives. Si un symbole de toxicité chimique est imprimé sous le symbole illustré ci-dessus conformément à la Directive relative aux piles et aux accumulateurs, il indique la présence d'un métal lourd (Hg = mercure, Cd = cadmium, Pb = plomb) dans la pile ou l'accumulateur à une concentration supérieure au seuil applicable spécifié par la Directive. Ce produit doit être confié au distributeur à chaque fois que vous achetez un produit neuf similaire, ou à un point de collecte mis en place par les collectivités locales pour le recyclage des Déchets des Équipements Électriques et Électroniques (DEEE). Le traitement inapproprié de ce type de déchet risque d'avoir des répercussions sur l'environnement et la santé humaine, du fait de la présence de substances potentiellement dangereuses généralement associées aux équipements électriques et électroniques. Votre entière coopération dans le cadre de la mise au rebut correcte de ce produit favorisera une meilleure utilisation des ressources naturelles. Pour plus d'informations sur le recyclage de ce produit, contactez vos services municipaux, votre éco-organisme ou les autorités locales compétentes, ou consultez le site www.canon-europe.com/weee, ou www.canon-europe.com/battery.

Uitsluitend bestemd voor de Europese Unie en EER (Noorwegen, IJsland en Liechtenstein)

Met deze symbolen wordt aangegeven dat dit product in overeenstemming met de AEEA-richtlijn (2012/19/EU), de richtlijn 2006/66/EG betreffende batterijen en accu's en/of de plaatselijk geldende wetgeving waarin deze richtlijnen zijn geïmplementeerd, niet bij het normale huisvuil mag worden weggegooid. Indien onder het hierboven getoonde symbool een chemisch symbool gedrukt staat, geeft dit in overeenstemming met de richtlijn betreffende batterijen en accu's aan dat deze batterij of accu een zwaar metaal bevat (Hg = kwik, Cd = cadmium, Pb = lood) waarvan de concentratie de toepasselijke drempelwaarde in overeenstemming met de genoemde richtlijn overschrijdt. Dit product dient te worden ingeleverd bij een hiervoor aangewezen inzamelpunt, bijv. door dit in te leveren bij een hiertoe erkend verkooppunt bij aankoop van een gelijksoortig product, of bij een officiële inzameldienst voor de recycling van elektrische en elektronische apparatuur (EEA) en batterijen en accu's. Door de potentieel gevaarlijke stoffen die gewoonlijk gepaard gaan met EEA, kan onjuiste verwerking van dit type afval mogelijk nadelige gevolgen hebben voor het milieu en de menselijke gezondheid. Uw medewerking bij het op juiste wijze weggooien van dit product draagt bij tot effectief gebruik van natuurlijke hulpbronnen. Voor verdere informatie over recycling van dit product kunt u contact opnemen met uw plaatselijke gemeente, afvaldienst, officiële dienst voor klein chemisch afval of afvalstortplaats, of kunt u terecht op www.canon-europe.com/weee, of www.canon-europe.com/battery.

Sólo para la Unión Europea y el Área Económica Europea (Noruega, Islandia y Liechtenstein)

Estos iconos indican que este producto no debe desecharse con los residuos domésticos de acuerdo con la Directiva sobre RAEE (2012/19/UE) y la Directiva sobre Pilas y Acumuladores (2006/66/CE) y/o la legislación nacional. Si aparece un símbolo químico bajo este icono, de acuerdo con la Directiva sobre Pilas y Acumuladores, significa que la pila o el acumulador contiene metales pesados (Hg = Mercurio, Cd = Cadmio, Pb = Plomo) en una concentración superior al límite especificado en dicha directiva. Este producto deberá entregarse en un punto de recogida designado, por ejemplo, entregándolo en el lugar de venta al adquirir un producto nuevo similar o en un centro autorizado para la recogida de residuos de aparatos eléctricos y electrónicos (RAEE), baterías y acumuladores. La gestión incorrecta de este tipo de residuos puede afectar al medio ambiente y a la salud humana debido a las sustancias potencialmente nocivas que suelen contener estos aparatos. Su cooperación en la correcta eliminación de este producto contribuirá al correcto aprovechamiento de los recursos naturales. Los usuarios tienen derecho a devolver pilas, acumuladores o baterías usados sin coste alguno. El precio de venta de pilas, acumuladores y baterías incluye el coste de la gestión medioambiental de su desecho, y no es necesario mostrar la cuantía de dicho coste en la información y la factura suministradas a los usuarios finales. Si desea más información sobre el reciclado de este producto, póngase en contacto con su municipio, el servicio o el organismo encargado de la gestión de residuos domésticos o visite www.canon-europe.com/weee, o www.canon-europe.com/battery.

Només per a la Unió Europea i a l'Espai Econòmic Europeu (Noruega, Islàndia i Liechtenstein)

Aquests símbols indican que aquest producte no s'ha de llençar amb les escombraries de la llar, d'acord amb la RAEE (2012/19/UE), la Directiva relativa a piles i acumuladors (2006/66/CE) i la legislació nacional que implementi aquestes directives. Si al costat d'aquest símbol hi apareix imprès un símbol químic, segons especifica la Directiva relativa a piles i acumuladors, significa que la bateria o l'acumulador conté un metall pesant (Hg = mercuri, Cd = cadmi, Pb = plom) en una concentració superior al límit aplicable especificat en la Directiva. Aquest producte s'hauria de lliurar en un dels punts de recollida designats, com per exemple, intercanviant un per un en comprar un producte similar o lliurant-lo en un lloc de recollida autoritzat per al reciclatge de residus d'aparells elèctrics i electrònics (RAEE) i piles i acumuladors. La manipulació inadequada d'aquest tipus de residus podria tenir un impacte negatiu en l'entorn i en la salut humana, a causa de les substàncies potencialment perilloses que normalment estan associades a l'RAEE. La vostra cooperació a l'hora de rebutjar correctament aquest producte contribuirà a la utilització efectiva dels recursos naturals. Els usuaris tenen dret a retornar les bateries o els acumuladors usats sense cap càrrec. El preu de venda de les bateries i els acumuladors inclou el cost de la gestió ambiental dels residus i no es necessari mostrar l'import d'aquest cost en aquest fullet o en la factura que es lliuri a l'usuari final. Per a més informació sobre el reciclatge d'aquest producte, contacteu amb l'oficina municipal, les autoritats encarregades dels residus, el pla de residus homologat o el servei

de recollida d’escombraries domèstiques de la vostra localitat o visiteu www.canon-europe.com/weee, o www.canon-europe.com/battery.

Solo per Unione Europea e SEE (Norvegia, Islanda e Liechtenstein)

Questi simboli indicano che il prodotto non può essere smaltito con i rifiuti domestici, ai sensi della Direttiva RAEE (2012/19/UE), della Direttiva sulle Batterie (2006/66/CE) e/o delle leggi nazionali che attuano tali Direttive. Se sotto il simbolo indicato sopra è riportato un simbolo chimico, in osservanza della Direttiva sulle batterie, tale simbolo indica la presenza di un metallo pesante (Hg = Mercurio, Cd = Cadmio, Pb = Piombo) nella batteria o nell'accumulatore con un livello di concentrazione superiore a una soglia applicabile specificata nella Direttiva sulle batterie. Il prodotto deve essere conferito a un punto di raccolta designato, ad esempio il rivenditore in caso di acquisto di un nuovo prodotto simile oppure un centro di raccolta autorizzato per il riciclaggio di rifiuti di apparecchiature elettriche ed elettroniche (RAEE) nonché di batterie e accumulatori. Un trattamento improprio di questo tipo di rifiuti può avere conseguenze negative sull'ambiente e sulla salute umana a causa delle sostanze potenzialmente nocive solitamente contenute in tali rifiuti. La collaborazione dell'utente per il corretto smaltimento di questo prodotto contribuirà a un utilizzo efficace delle risorse naturali ed eviterà di incorrere in sanzioni amministrative ai sensi dell'art. 255 e successivi del Decreto Legislativo n. 152/06. Per ulteriori informazioni sul riciclaggio di questo prodotto, contattare le autorità locali, l'ente responsabile della raccolta dei rifiuti, un rivenditore autorizzato o il servizio di raccolta dei rifiuti domestici, oppure visitare il sito www.canon-europe.com/weee, o www.canon-europe.com/battery.

Apenas para a União Europeia e AEE (Noruega, Islândia e Liechtenstein)

Estes símbolos indicam que este produto não deve ser eliminado juntamente com o seu lixo doméstico, segundo a Diretiva REEE de 2012/19/UE, a Diretiva de Baterias (2006/66/CE) e/ou a sua legislação nacional que transponha estas Diretivas. Se houver um símbolo químico impresso como mostrado abaixo, de acordo com a Diretiva de Baterias, isto indica que um metal pesado (Hg = Mercúrio, Cd = Cádmio, Pb = Chumbo) está presente nesta pilha ou acumulador, numa concentração acima de um limite aplicável especificado na Diretiva. Este produto deve ser entregue num ponto de recolha designado, por exemplo num local autorizado de troca quando compra um equipamento novo idêntico, ou num local de recolha autorizado para reciclar equipamento elétrico e eletrónico (EEE) em fim de vida, bem como pilhas e baterias. O tratamento inadequado deste tipo de resíduos pode ter um impacto negativo no ambiente e na saúde humana, devido a substâncias potencialmente perigosas que estão associadas com equipamentos do tipo EEE. A sua cooperação no tratamento correto deste produto irá contribuir para a utilização mais eficaz dos recursos naturais. Para obter mais informações acerca de como reciclar este produto, por favor contacte as suas autoridades locais responsáveis pela matéria, serviço de recolha aprovado para pilhas e baterias ou serviço de recolha de resíduos sólidos domésticos da sua municipalidade, ou visite www.canon-europe.com/weee, ou www.canon-europe.com/battery.

Gælder kun i Europæiske Union og EØS (Norge, Island og Liechtenstein)

Disse symboler betyder, at produktet ikke må bortskaffes sammen med dagrenovation i henhold til WEEE-direktivet (2012/19/EU), batteridirektivet (2006/66/EF) og/eller den lokale lovgivning, som disse direktiver er gennemført i. Hvis der i overensstemmelse med batteridirektivet er trykt et kemisk symbol under det symbol, der er vist ovenfor, betyder det, at batteriet eller akkumulatoren indeholder tungmetaller (Hg = kviksølv, Cd = cadmium, Pb = bly) i en koncentration, som ligger over de grænseværdier, der er beskrevet i batteridirektivet. Produktet skal afleveres på et godkendt indsamlingssted, f.eks. i overensstemmelse med en godkendt én-til-én-procedure, når du indkøber et nyt tilsvarende produkt, eller på et godkendt indsamlingssted for elektronikaffald samt for batterier og akkumulatorer. Forkert håndtering af denne type affald kan medføre negative konsekvenser for miljøet og menneskers helbred på grund af de potentielt sundhedsskadelige stoffer, der generelt kan forefindes i elektrisk og elektronisk udstyr. Når du foretager korrekt bortskaffelse af produktet, bidrager du til effektiv brug af naturressourcerne. Kontakt din kommune, den lokale affaldsmyndighed, det lokale affaldsanlæg, eller besøg www.canon-europe.com/weee, eller www.canon-europe.com/battery for at få flere oplysninger om genbrug af dette produkt.

Μόνο για την Ευρωπαϊκή Ένωση και τον ΕΟΧ (Νορβηγία, Ισλανδία και Λιχτενστάιν)

Αυτά τα σύμβολα υποδεικνύουν ότι αυτό το προϊόν δεν πρέπει να απορρίπτεται μαζί με τα οικιακά απορρίμματα, σύμφωνα με την Οδηγία για τα Απόβλητα Ηλεκτρικού και Ηλεκτρονικού Εξοπλισμού (ΑΗΗΕ) (2012/19/ΕΕ), την Οδηγία για τις Ηλεκτρικές Στήλες (2006/66/ΕΚ) ή/και την εθνική νομοθεσία που εφαρμόζει τις Οδηγίες εκείνες. Εάν κάποιο χημικό σύμβολο είναι τυπωμένο κάτω από το σύμβολο που φαίνεται παραπάνω, σύμφωνα με την Οδηγία για τις Ηλεκτρικές Στήλες, υποδηλώνει ότι κάποιο βαρύ μέταλλο (Hg = Υδράργυρος, Cd = Κάδμιο, Pb = Μόλυβδος) υπάρχει στην μπαταρία ή τον συσσωρευτή σε συγκέντρωση μεγαλύτερη από το ισχύον επίπεδο που καθορίζεται στην Οδηγία για τις Ηλεκτρικές Στήλες. Αυτό το προϊόν πρέπει να παραδίδεται σε καθορισμένο σημείο συλλογής, π.χ. σε μια εξουσιοδοτημένη βάση ανταλλαγής όταν αγοράζετε ένα νέο παρόμοιο προϊόν ή σε μια εξουσιοδοτημένη θέση συλλογής για την ανακύκλωση των αποβλήτων ηλεκτρικού και ηλεκτρονικού εξοπλισμού (ΗΗΕ) και των ηλεκτρικών στηλών και συσσωρευτών. Ο ακατάλληλος χειρισμός αυτού του τύπου αποβλήτων μπορεί να έχει αρνητικό αντίκτυπο στο περιβάλλον και την υγεία του ανθρώπου, λόγω δυνητικά επικίνδυνων ουσιών που γενικά συνδέονται με τον ΗΗΕ. Η συνεργασία σας για τη σωστή απόρριψη αυτού του προϊόντος θα συμβάλει στην αποτελεσματική χρήση των φυσικών πόρων. Για περισσότερες πληροφορίες σχετικά με ανακύκλωση αυτού του προϊόντος, επικοινωνήστε με το τοπικό γραφείο της πόλης σας, την υπηρεσία απορριμμάτων, το εγκεκριμένο σχήμα ή την υπηρεσία απόρριψης οικιακών αποβλήτων ή επισκεφθείτε τη διεύθυνση www.canon-europe.com/weee ή www.canon-europe.com/battery.

Gjelder kun den europeiske union og EØS (Norge, Island og Liechtenstein)

Disse symbolene indikerer at dette produktet ikke skal kastes sammen med husholdningsavfall, i henhold til WEEE-direktivet (2012/19/EU), batteridirektivet (2006/66/EF) og/eller nasjonal lov som har implementert disse direktivene. Hvis et kjemisk symbol vises under symbolet vist ovenfor, i samsvar med batteridirektivet, indikerer dette at et tungmetall (Hg = kvikksølv, Cd = kadmium, Pb = bly) finnes i batteriet eller akkumulatoren i en konsentrasjon over en gjeldende øvre grense som er spesifisert i batteridirektivet. Produktet må leveres til et dertil egnet innsamlingspunkt, det vil si på en autorisert en-til-en-basis når en kjøper et nytt lignende produkt, eller til et autorisert innsamlingssted for resirkulering av avfall fra elektrisk og elektronisk utstyr (EE-utstyr) og batterier og akkumulatorer. Feil håndtering av denne typen avfall kan være miljø- og helseskadelig på grunn av potensielt skadelige stoffer som ofte brukes i EE-utstyr. Din innsats for korrekt avhending av produktet vil bidra til effektiv bruk av naturressurser. Du kan få mer informasjon om resirkulering av dette produktet ved å kontakte lokale myndigheter, avfallsadministrasjonen, et godkjent program eller husholdningens renovasjonsselskap, eller gå til www.canon-europe.com/weee, eller www.canon-europe.com/battery.

Vain Euroopan unionin sekä ETA:n (Norja, Islanti ja Liechtenstein) alueelle.

Nämä tunnukset osoittavat, että sähkö- ja elektroniikkalaiteromua koskeva direktiivi (SER-direktiivi, 2012/19/EU), paristoista ja akuista annettu direktiivi (2006/66/EY) sekä kansallinen lainsäädäntö kieltävät tuotteen hävittämisen talousjätteen mukana. Jos yllä olevan symbolin alapuolelle on paristodirektiivin mukaisesti painettu kemiallisen aineen tunnus, kyseinen paristo tai akku sisältää raskasmetalleja (Hg = elohopea, Cd = kadmium, Pb = lyijy) enemmän kuin paristodirektiivin salliman määrän. Tuote on vietävä asianmukaiseen keräyspisteeseen, esimerkiksi kodinkoneliikkeeseen uutta vastaavaa tuotetta ostettaessa tai viralliseen sähkö- ja elektroniikkalaiteromun tai paristojen ja akkujen keräyspisteeseen. Sähkö- ja elektroniikkalaiteromun virheellinen käsittely voi vahingoittaa ympäristöä ja ihmisten terveyttä, koska laitteet saattavat sisältää ympäristölle ja terveydelle haitallisia aineita. Tuotteen asianmukainen hävittäminen säästää myös luonnonvaroja. Jos haluat lisätietoja tämän tuotteen kierrätyksestä, ota yhteys kunnan jätehuoltoviranomaisiin tai käyttämääsi jätehuoltoyhtiöön tai käy osoitteessa www.canon-europe.com/weee, tai www.canon-europe.com/battery.

Endast för Europeiska unionen och EES (Norge, Island och Liechtenstein)

De här symbolerna visar att produkten inte får sorteras och slängas som hushållsavfall enligt WEEE-direktivet (2012/19/EU), batteridirektivet (2006/66/EG) och/eller nationell lagstiftning som implementerar dessa direktiv. Om en kemisk symbol förekommer under ovanstående symbol innebär detta enligt Batteridirektivet att en tungmetall (Hg = Kvicksilver, Cd = Kadmium, Pb = Bly) förekommer i batteriet eller

ackumulatorn med en koncentration som överstiger tillämplig gräns som anges i Batteridirektivet. Produkten ska lämnas in på en avsedd insamlingsplats, t.ex. på en återvinningsstation auktoriserad att hantera elektrisk och elektronisk utrustning (EE-utrustning) samt batterier och ackumulatorer eller hos handlare som är auktoriserade att byta in varor då nya, motsvarande köps (en mot en). Olämplig hantering av avfall av den här typen kan ha negativ inverkan på miljön och människors hälsa på grund av de potentiellt farliga ämnen som kan återfinnas i elektrisk och elektronisk utrustning. Din medverkan till en korrekt avfallshantering av produkten bidrar till effektiv användning av naturresurserna. Om du vill ha mer information om var du kan lämna in den här produkten, kontakta ditt lokala kommunkontor, berörd myndighet eller företag för avfallshantering eller se www.canon-europe.com/weee, eller www.canon-europe.com/battery.

Pouze Evropská unie a EHP (Norsko, Island a Lichtenštejnsko)

Tento symbol znamená, že podle směrnice OEEZ (2012/19/EU), směrnice o bateriích (2006/66/ES) a/nebo podle vnitrostátních právních prováděcích předpisů k těmto směrnicím nemá být tento výrobek likvidován s odpadem z domácností. Je-li v souladu s požadavky směrnice o bateriích vytištěna pod výše uvedeným symbolem chemická značka, udává, že tato baterie nebo akumulátor obsahuje těžké kovy (Hg = rtuť, Cd = kadmium, Pb = olovo) v koncentraci vyšší, než je příslušná hodnota předepsaná směrnicí. Tento výrobek má být vrácen do určeného sběrného místa, např. v rámci autorizovaného systému odběru jednoho výrobku za jeden nově prodaný podobný výrobek, nebo do autorizovaného sběrného místa pro recyklaci odpadních elektrických a elektronických zařízení (OEEZ), baterií a akumulátorů. Nevhodné nakládání s tímto druhem odpadu by mohlo mít negativní dopad na životní prostředí a lidské zdraví, protože elektrická a elektronická zařízení zpravidla obsahují potenciálně nebezpečné látky. Vaše spolupráce na správné likvidaci tohoto výrobku napomůže efektivnímu využívání přírodních zdrojů. Chcete-li získat podrobné informace týkající se recyklace tohoto výrobku, obraťte se prosím na místní úřad, orgán pro nakládání s odpady, schválený systém nakládání s odpady či společnost zajišťující likvidaci domovního odpadu, nebo navštivte webové stránky www.canon-europe.com/weee nebo www.canon-europe.com/battery.

Csak az Európai Unió és az EGT (Norvégia, Izland és Liechtenstein) országaiban

Ezek a szimbólumok azt jelzik, hogy a termék hulladékkezelése a háztartási hulladéktól különválasztva, az elektromos és elektronikus berendezések hulladékairól (WEEE) szóló (2012/19/EU) irányelvnek és az elemekről és akkumulátorokról, valamint a hulladék elemekről és akkumulátorokról szóló (2006/66/EK) irányelvnek megfelelően és/vagy ezen irányelveknek megfelelő helyi előírások szerint történik. Amennyiben a fent feltüntetett szimbólum alatt egy vegyjel is szerepel, az elemekről és akkumulátorokról szóló irányelvben foglaltak értelmében ez azt jelzi, hogy az elem vagy az akkumulátor az irányelvben meghatározott határértéknél nagyobb mennyiségben tartalmaz nehézfémet (Hg = higany, Cd = kadmium, Pb = ólom). E terméket az arra kijelölt gyűjtőhelyre kell juttatni – pl. hasonló termék vásárlásakor a régi

becserélésére vonatkozó hivatalos program keretében, vagy az elektromos és elektronikus berendezések (EEE) hulladékainak gyűjtésére, valamint a hulladék elemek és hulladék akkumulátorok gyűjtésére kijelölt hivatalos gyűjtőhelyre. Az ilyen jellegű hulladékok nem előírásszerű kezelése az elektromos és elektronikus berendezésekhez (EEE) általánosan kapcsolható potenciálisan veszélyes anyagok révén hatással lehet a környezetre és az egészségre. E termék megfelelő leselejtezésével Ön is hozzájárul a természeti források hatékony használatához. A termék újrahasznosítását illetően informálódjon a helyi polgármesteri hivatalnál, a helyi közterület-fenntartó vállalatnál, a hivatalos hulladéklerakó telephelyen vagy a háztartási hulladék begyűjtését végző szolgáltatónál, illetve látogasson el a www.canon-europe.com/weee, vagy www.canon-europe.com/battery internetes oldalra.

Tylko dla krajów Unii Europejskiej oraz EOG (Norwegia, Islandia i Liechtenstein)

Te symbole oznaczają, że produktu nie należy wyrzucać razem z odpadami gospodarstwa domowego, zgodnie z dyrektywą WEEE w sprawie zużytego sprzętu elektrycznego i elektronicznego (2012/19/UE) lub dyrektywą w sprawie baterii (2006/66/WE) bądź przepisami krajowymi wdrażającymi te dyrektywy. Jeśli pod powyższym symbolem znajduje się symbol chemiczny, zgodnie z dyrektywą w sprawie baterii oznacza to, że bateria lub akumulator zawiera metal ciężki (Hg = rtęć, Cd = kadm, Pb = ołów) w stężeniu przekraczającym odpowiedni poziom określony w dyrektywie w sprawie baterii. Użytkownicy baterii i akumulatorów mają obowiązek korzystać z dostępnego programu zwrotu, recyklingu i utylizacji baterii oraz akumulatorów. Niewłaściwe postępowanie z tego typu odpadami może mieć wpływ na środowisko i zdrowie ludzi ze względu na substancje potencjalnie niebezpieczne, związane ze zużytym sprzętem elektrycznym i elektronicznym. Państwa współpraca w zakresie właściwej utylizacji tego produktu przyczyni się do efektywnego wykorzystania zasobów naturalnych. W celu uzyskania informacji o sposobie recyklingu tego produktu prosimy o kontakt z właściwym urzędem miejskim lub zakładem gospodarki komunalnej bądź zapraszamy na stronę www.canon-europe.com/weee, lub www.canon-europe.com/battery.

Platí len pre štáty Európskej únie a EHP (Nórsko, Island a Lichtenštajnsko)

Tieto symboly označujú, že podľa Smernice o odpade z elektrických a elektronických zariadení (OEEZ) 2012/19/EÚ, Smernice o batériách (2006/66/ES) a podľa platnej legislatívy Slovenskej republiky sa tento produkt nesmie likvidovať spolu s komunálnym odpadom. Ak je chemická značka vytlačená pod vyššie uvedeným symbolom, znamená to, že táto batéria alebo akumulátor obsahuje ťažký kov (Hg = ortuť, Cd = kadmium, Pb = olovo) v koncentrácii vyššej, ako je príslušná povolená hodnota stanovená v Smernici o batériách. Produkt je potrebné odovzdať do určenej zberne, napr. prostredníctvom výmeny za kúpu nového podobného produktu, alebo na autorizované zberné miesto, ktoré spracúva odpad z elektrických a elektronických zariadení (EEZ), batérií a akumulátorov. Nesprávna manipulácia s takýmto typom odpadu môže mať negatívny vplyv na životné prostredie a ľudské zdravie, pretože elektrické a elektronické zariadenia obsahujú potenciálne nebezpečné látky. Spoluprácou na správnej likvidácii tohto

produktu prispejete k účinnému využívaniu prírodných zdrojov. Ďalšie informácie o recyklácii tohto produktu získate od miestneho úradu, úradu životného prostredia, zo schváleného plánu OEEZ alebo od spoločnosti, ktorá zaisťuje likvidáciu komunálneho odpadu. Viac informácií nájdete aj na webovej stránke: www.canon-europe.com/weee, alebo www.canon-europe.com/battery.

Üksnes Euroopa Liit ja EMP (Norra, Island ja Liechtenstein)

Antud sümbolid viitavad sellele, et vastavalt elektri- ja elektroonikaseadmete jäätmeid käsitlevale direktiivile (2012/19/EL), patareisid ja akusid ning patarei- ja akujäätmeid käsitlevale direktiivile (2006/66/EÜ) ja/või nimetatud direktiive rakendavatele riiklikele õigusaktidele ei või seda toodet koos olmejäätmetega ära visata. Kui keemiline sümbol on trükitud eespool toodud sümboli alla, siis tähendab see, et antud patareis või akus leiduva raskemetalli (Hg = elavhõbe, Cd = kaadmium, Pb = plii) kontsentratsioonitase on kõrgem kui patareisid ja akusid ning patarei- ja akujäätmeid käsitlevas direktiivis sätestatud piirmäär. Antud tootest tekkinud jäätmed tuleb anda vastavasse kogumispunkti, nt müügipunkti, mis on volitatud üks ühe vastu vahetama, kui ostate uue sarnase toote, või vastavasse elektri- ja lektroonikaseadmete jäätmete ning patareide ja akude ümbertöötlemiseks mõeldud kogumispunkti. Antud liiki jäätmete vale käitlemine võib kahjustada keskkonda ja inimeste tervist elektri- ja elektroonikajäätmetes tavaliselt leiduvate potentsiaalselt ohtlike ainete tõttu. Antud tootest tekkinud jäätmete nõuetekohase kõrvaldamisega aitate kasutada loodusvarasid efektiivselt. Täiendava teabe saamiseks elektri- ja elektroonikaseadmetest tekkinud jäätmete ning patarei- ja akujäätmete tagastamise ja ümbertöötlemise kohta võtke ühendust kohaliku omavalitsusega, asjakohase valitsusasutusega, asjakohase tootjavastutusorganisatsiooniga või olmejäätmete käitlejaga. Lisateavet leitate ka Interneti-leheküljelt www.canon-europe.com/weee või www.canon-europe.com/battery.

Tikai Eiropas Savienībai un EEZ (Norvēģijai, Islandei un Lihtenšteinai)

Šie simboli norāda, ka atbilstoši ES Direktīvai (2012/19/ES) par elektrisko un elektronisko iekārtu atkritumiem (EEIA), Direktīvai (2006/66/EK) par baterijām un akumulatoriem, un akumulatoru atkritumiem, ar ko atceļ Direktīvu 91/157/EEK, un vietējiem tiesību aktiem šo izstrādājumu nedrīkst izmest kopā ar sadzīves atkritumiem. Ja zem iepriekš norādītā simbola ir uzdrukāts ķīmiskais simbols, saskaņā ar direktīvu par baterijām un akumulatoriem tas nozīmē, ka šīs baterijas vai akumulatori satur smagos metālus (Hg = dzīvsudrabs, Cd = kadmijs, Pb = svins) un to koncentrācijas līmenis pārsniedz direktīvā par baterijām un akumulatoriem minēto piemērojamo slieksni. Šis izstrādājums ir jānodod piemērotā savākšanas vietā, piemēram, apstiprinātā veikalā, kur iegādājaties līdzīgu jaunu produktu un atstājat veco, vai apstiprinātā vietā izlietotu elektrisko un elektronisko iekārtu un bateriju un akumulatoru pārstrādei. Nepareiza šāda veida atkritumu apsaimniekošana var apdraudēt vidi un cilvēka veselību tādu iespējami bīstamu vielu dēļ, kas parasti ir elektriskajās un elektroniskajās iekārtās. Jūsu atbalsts pareizā šāda veida atkritumu apsaimniekošanā sekmēs efektīvu dabas resursu izmantošanu. Lai saņemtu pilnīgāku informāciju par šāda veida izstrādājumu nodošanu otrreizējai pārstrādei, sazinieties ar vietējo pašvaldību, atkritumu savākšanas atbildīgo dienestu, pilnvaroto organizāciju vai iestādi, kas veic sadzīves

atkritumu apsaimniekošanu, vai apmeklējiet tīmekļa vietni www.canon-europe.com/weee, vai www.canon-europe.com/battery.

Tik Europos Sąjungai ir EEE (Norvegijai, Islandijai ir Lichtenšteinui)

Šie simboliai reiškia, kad šio gaminio negalima išmesti į buitines atliekas, kaip reikalaujama WEEE Direktyvoje (2012/19/ES) ir Baterijų direktyvoje (2006/66/EB) ir (ar) jūsų šalies nacionaliniuose įstatymuose, kuriais šios Direktyvos yra įgyvendinamos. Jeigu cheminio ženklo simbolis yra nurodytas žemiau šio ženklo, tai reiškia, kad vadovaujantis Baterijų direktyvą, baterijų ar akumuliatorių sudėtyje yra sunkiųjų metalų (Hg = gyvsidabrio, Cd = kadmio, Pb = švino), kurių koncentracija viršija Baterijų direktyvoje nurodytas leistinas ribas. Šį gaminį reikia pristatyti į specialųjį surinkimo punktą, pavyzdžiui, mainais, kai jūs perkate naują panašų gaminį, arba į specialiąją surinkimo vietą, kurioje perdirbamos elektrinės ir elektroninės įrangos atliekos bei naudotos baterijos ir akumuliatoriai. Dėl netinkamo šio tipo atliekų tvarkymo gali nukentėti aplinka ir iškilti grėsmė žmogaus sveikatai dėl galimai kenksmingų medžiagų, iš esmės susijusių su elektrine ir elektronine įranga. Bendradarbiaudami ir teisingai utilizuodami šiuos gaminius, jūs padėsite efektyviai naudoti gamtinius išteklius. Daugiau informacijos apie gaminio perdirbimą jums gali suteikti vietinis biuras, atliekų tvarkymo bendrovė, sertifikuoti organai ar buitinių atliekų surinkimo įmonės. Taip pat siūloma apsilankyti interneto svetainėje www.canon-europe.com/weee, arba www.canon-europe.com/battery.

Samo za Evropsko unijo in EGP (Norveška, Islandija in Lihtenštajn)

Ti simboli pomenijo, da tega izdelka skladno z Direktivo OEEO (2012/19/EU), Direktivo 2006/66/ES in/ali nacionalno zakonodajo, ki uvaja ti direktivi, ne smete odlagati z nesortiranimi gospodinjskimi odpadki. Če je pod zgoraj prikazanim simbolom natisnjen kemijski simbol, to v skladu z Direktivo pomeni, da je v tej bateriji ali akumulatorju prisotna težka kovina (Hg = živo srebro, Cd = kadmij, Pb = svinec), in sicer v koncentraciji, ki je nad relevantno mejno vrednostjo, določeno v Direktivi. Ta izdelek je potrebno odnesti na izbrano zbirno mesto, t. j. pooblaščeno trgovino, kjer ob nakupu novega (podobnega) izdelka vrnete starega, ali na pooblaščeno zbirno mesto za ponovno uporabo odpadne električne in elektronske opreme (EEO) ter baterij in akumulatorjev. Neustrezno ravnanje s to vrsto odpadkov lahko negativno vpliva na okolje in človeško zdravje zaradi potencialno nevarnih snovi, ki so pogosto povezane z EEO. Vaše sodelovanje pri pravilnem odlaganju tega izdelka predstavlja pomemben prispevek k smotrni izrabi naravnih virov. Za več informacij o ponovni uporabi tega izdelka se obrnite na lokalen mestni urad, pristojno službo za odpadke, predstavnika pooblaščenega programa za obdelavo odpadkov ali na lokalno komunalo. Lahko pa tudi obiščete našo spletno stran www.canon-europe.com/weee, ali www.canon-europe.com/battery.

Само за Европейския съюз и ЕИП (Норвегия, Исландия и Лихтенщайн)

Тези символи показват, че този продукт не трябва да се изхвърля заедно с битовите отпадъци съгласно Директивата за ИУЕЕО (2012/19/ЕС), Директивата за батерии (2006/66/ЕО) и/или Вашето национално законодателство, прилагащо тези Директиви. Ако под показания горе символ е отпечатан символ за химически елемент, съгласно разпоредбите на Директивата за батерии, този втори символ означава наличието на тежък метал (Hg = живак, Cd = кадмий, Pb = олово) в батерията или акумулатора в концентрация над указаната граница за съответния елемент в Директивата. Този продукт трябва да бъде предаден в предназначен за целта пункт за събиране, например на база размяна, когато купувате нов подобен продукт, или в одобрен събирателен пункт за рециклиране на излязло от употреба електрическо и електронно оборудване (ИУЕЕО), батерии и акумулатори. Неправилното третиране на този тип отпадъци може да доведе до евентуални отрицателни последствия за околната среда и човешкото здраве поради потенциално опасните вещества, които обикновено са свързани с ЕЕО. В същото време Вашето съдействие за правилното изхвърляне на този продукт ще допринесе за ефективното използване на природните ресурси. За повече информация относно това къде можете да предадете за рециклиране на този продукт, моля свържете се с Вашите местни власти, с органа, отговорен за отпадъците, с одобрената система за ИУЕЕО или с Вашата местна служба за битови отпадъци, или посетете www.canon-europe.com/weee, или www.canon-europe.com/battery.

Doar pentru Uniunea Europeană şi EEA (Norvegia, Islanda şi Liechtenstein)

Aceste simboluri indică faptul că acest produs nu trebuie aruncat împreună cu deşeurile menajere, în conformitate cu Directiva DEEE (2012/19/UE), Directiva referitoare la baterii (2006/66/CE) şi/sau legile dvs. naţionale ce implementează aceste Directive. Dacă un simbol chimic este imprimat sub simbolul de mai sus, în conformitate cu Directiva referitoare la baterii, acest simbol indică prezenţa în baterie sau acumulator a unui metal greu (Hg = Mercur, Cd = Cadmiu, Pb = Plumb) într-o concentraţie mai mare decât pragul admis specificat în Directiva referitoare la baterii. Acest produs trebuie înmânat punctului de colectare adecvat, ex: printr-un schimb autorizat unu la unu atunci când cumpăraţi un produs nou similar sau la un loc de colectare autorizat pentru reciclarea reziduurilor de echipament electric şi electronic (EEE) şi baterii şi acumulatori. Administrarea neadecvată a acestui tip de deşeuri, ar putea avea un impact asupra mediului şi asupra sănătăţii umane datorită substanţelor cu potenţial de risc care sunt în general asociate cu EEE. Cooperarea dvs. în direcţia reciclării corecte a acestui produs va contribui la o utilizare eficientă a resurselor naturale. Pentru mai multe informaţii despre reciclarea acestui produs, vă rugăm să contactaţi biroul dvs. local, autorităţile responsabile cu deşeurile, schema aprobată sau serviciul dvs. responsabil cu deşeurile menajere sau vizitaţi-ne la www.canon-europe.com/weee, sau www.canon-europe.com/battery.

Samo za Europsku uniju i EEA (Norveška, Island i Lihtenštajn)

Oznaka pokazuje da se ovaj proizvod ne smije odlagati s komunalnim i ostalim vrstama otpada, u skladu s direktivom WEEE (2012/19/EC), Direktivom o baterijama (2006/66/EC) i Pravilnikom o gospodarenju otpadnim baterijama i akumulatorima te Pravilnikom o gospodarenju otpadnim električnim i elektroničkim uređajima i opremom. Ako je ispod prethodno prikazane oznake otisnut kemijski simbol, u skladu s Direktivom o baterijama, to znači da se u ovoj bateriji ili akumulatoru nalazi teški metal (Hg = živa, Cd = kadmij, Pb = olovo) i da je njegova koncentracija iznad razine propisane u Direktivi o baterijama. Ovaj bi proizvod trebalo predati ovlašenom skupljaču EE otpada ili prodavatelju koji je dužan preuzeti otpadni proizvod po sistemu jedan za jedan, ukoliko isti odgovara vrsti te je obavljao primarne funkcije kao i isporučena EE oprema. Otpadne baterije i akumulatori predaju se ovlaštenom skupljaču otpadnih baterija ili akumulatora ili prodavatelju bez naknade i obveze kupnje za krajnjeg korisnika. Neodgovarajuće rukovanje ovom vrstom otpada može utjecati na okoliš i ljudsko zdravlje zbog potencijalno opasnih supstanci koje se najčešće nalaze na takvim mjestima. Vaša suradnja u pravilnom zbrinjavanju ovog proizvoda pridonijet će djelotvornom iskorištavanju prirodnih resursa. Dodatne informacije o recikliranju ovog proizvoda zatražite od svog lokalnog gradskog ureda, službe za zbrinjavanje otpada, odobrenog programa ili komunalne službe za uklanjanje otpada ili pak na stranicama www.canon-europe.com/weee ili www.canon-europe.com/battery.

Korisnici u Srbiji

Ovaj simbol označava da ovaj proizvod ne sme da se odlaže sa ostalim kućnim otpadom, u skladu sa WEEE Direktivom (2012/19/EU), Direktivom o baterijama (2006/66/EC) i nacionalnim zakonima. Ukoliko je ispod gore navedenog simbola odštampan hemijski simbol, u skladu sa Direktivom o baterijama, ovaj simbol označava da su u ovoj bateriji ili akumulatoru prisutni teški metali (Hg – živa, Cd – kadmijum, Pb - olovo) u koncentracijama koje premašuju prihvatljivi prag naveden u Direktivi o baterijama. Ovaj proizvod treba predati određenom centru za prikupljanje, npr. po principu „jedan-za-jedan“ kada kupujete sličan novi proizvod, ili ovlašćenom centru za prikupljanje za reciklažu istrošene električne i elektronske opreme (EEE), baterija i akumulatora. Nepravilno rukovanje ovom vrstom otpada može imati negativne posledice po životnu sredinu i ljudsko zdravlje usled potencijalno opasnih materijala koji se uglavnom vezuju za EEE. Vaša saradnja na ispravnom odlaganju ovog proizvoda će doprineti efikasnom korišćenju prirodnih resursa. Više informacija o tome kako možete da reciklirate ovaj proizvod potražite od lokalnih gradskih vlasti, komunalne službe, odobrenog plana reciklaže ili servisa za odlaganje kućnog otpada, ili posetite stranicu www.canon-europe.com/weee, ili www.canon-europe.com/battery.

Basic Printing Workflow

- Printing procedure
- Canceling print jobs
- Pausing Printing

Printing procedure

- Printing Options Using Rolls and Sheets
- Turning the Printer On and Off
- Loading and Printing on Rolls
- Loading and Printing on Sheets
- Printing in Windows
- Printing from Mac OS

Printing Options Using Rolls and Sheets

The printer supports both rolls and sheets.

This section introduces the main features of each, as well as the main printing methods available. Select rolls or sheets to suit your particular printing application.

Note

- For information on the types of paper the printer supports, see "Types of Paper."
- A variety of other ways to print are available besides those introduced here. For details, see "Enhanced Printing Options."

Roll printing

Media in spooled rolls is generally called Roll Media. Rolls are loaded on the Roll Holder, which are in turn loaded in the printer.

Rolls can be used to print large photos or create posters or banners that cannot be printed on regular sheets.

- Large-format printing

  Easily print vertical or horizontal banners from familiar applications such as Microsoft Office applications.

  (See "Printing Hanging and Horizontal Banners (Large-Format Printing)" (Windows).)

  (See "Printing Hanging and Horizontal Banners (Large-Format Printing)" (Mac OS).)

- Borderless printing

  Print without a margin (border) around posters or photos.

  (See "Prints without Edges Based on the Scenarios" (Windows).)

  (See "Prints without Edges Based on the Scenarios" (Mac OS).)

- Banner printing

  You can print multiple pages as a single continuous image, without margins between pages.

  (See "Printing by Connecting Multiple Pages" (Windows).)

  (See "Printing by Connecting Multiple Pages" (Mac OS).)

- 90-degree rotation before printing

  Originals in portrait orientation are rotated 90 degrees when possible to use paper more efficiently.

  (See "Saving Roll Paper by Rotating Document 90 Degrees" (Windows).)

  (See "Saving Roll Paper by Rotating Document 90 Degrees" (Mac OS).)

- Enlarged/reduced printing

  You can freely adjust the size of originals by enlarging or reducing originals before printing.

  (See "Scaled Printing" (Windows).)

  (See "Scaled Printing" (Mac OS).)

- Free Layout (Windows) and imagePROGRAF Free Layout (Mac OS)

  Print multiple documents from multiple applications (such as word-processing programs, spreadsheet programs, and so on) next to each other.

  (See "Lining Up and Printing Multiple Documents" (Windows).)

  (See "Lining Up and Printing Multiple Documents" (Mac OS).)

Note

- Setting the optional roll unit to feed mode and loading roll paper in both the Roll 1 (Upper) and Roll 2 (Lower) holders offers the following advantages.
  - Save the time and effort of switching paper

    By loading roll paper of different media types or paper sizes on the upper and lower rolls, you can select the roll paper in **Paper Source** in the printer driver when printing, eliminating the effort it takes to replace the roll.

    (See "Page Setup Tab Description" (Windows).)

    (See "Quality & Media" (Mac OS).)
  - Automatic selection of the right paper for the print job

    Selecting **Roll Paper (Auto)** in **Paper Source** in the printer driver enables automatic selection and printing on the roll that suits the print job from the loaded rolls.

    (See "Printing by Automatically Switching Upper-level and Lower-level Roll Papers" (Windows).)

    (See "Printing by Automatically Switching Upper-level and Lower-level Roll Papers" (Mac OS).)

Sheet printing

Sheets refer to individual sheets of paper.

Insert the sheet between the platen and the paper retainer.

- Enlarged/reduced printing

  You can freely adjust the size of originals by enlarging or reducing originals before printing.

  (See "Scaled Printing" (Windows).)

  (See "Scaled Printing" (Mac OS).)
- Free Layout (Windows) and imagePROGRAF Free Layout (Mac OS)

  Print multiple documents from multiple applications (such as word-processing programs, spreadsheet programs, and so on) next to each other.

  (See "Lining Up and Printing Multiple Documents" (Windows).)

  (See "Lining Up and Printing Multiple Documents" (Mac OS).)

Turning the Printer On and Off

Turning the printer on

1. Press **ON** button to turn on printer.

   The printer will now start up.

   The Canon logo appears on the touch screen, and then "**Starting the system Please wait.**" appears.

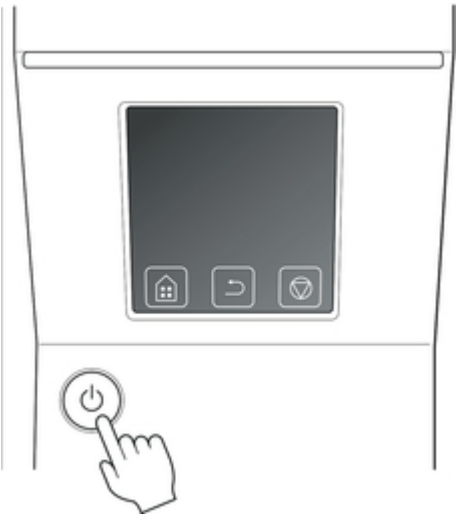

2. When startup is finished, **ON** button lights up, and printer enters standby mode.

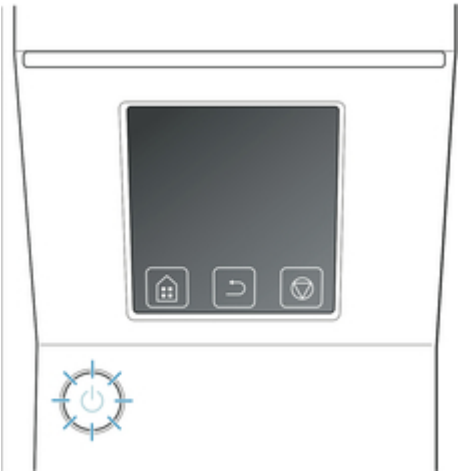

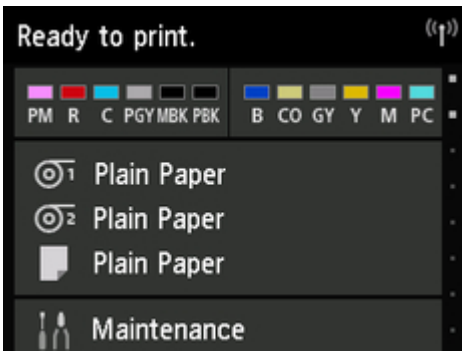

The printer will not enter standby mode in the following situations. Take action as necessary.

- The top cover is open
  Close the top cover.
- The ink tank cover is open
  Close the ink tank cover.
- The print head is not installed
  ➡ Replacing the Print Head
- The ink tank is not installed
  ➡ Replacing Ink Tanks
- **Error** appears on touch screen
  Check the message on the touch screen and take action as necessary.
- The **ON** button and **Status** lamp never light up, and nothing appears on the touch screen
  Make sure the printer is plugged in correctly. Check the connection at the plug and electrical outlet.
- No paper is loaded
  Load paper. (See "Loading and Printing on Rolls.") (See "Loading and Printing on Sheets.")

Turning the printer off

Important

- Never disconnect the printer's power supply or unplug it during a print job. This may damage the printer.

1. Make sure no print jobs are in progress.

   While the **Status** lamp is flashing, the printer is running. The color of the lamp indicates the following states.

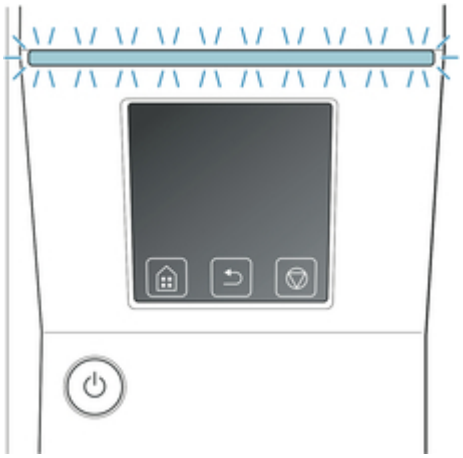

If the **Status** lamp is flashing orange, check the message on the touch screen and take action as necessary.

If the **Status** lamp is flashing white, the printer is receiving a print job. Turn off the printer after printing is finished.

2. Hold down the **ON** button for more than a second.

"**Ending Please wait a while.**" appears on the touch screen, and the printer turns off.

Loading and Printing on Rolls

These are the basic steps for loading and printing on rolls.

Follow these steps to load and print on rolls.

Note

- For details on roll paper sizes and types that can be used, see "Paper Sizes" or "Paper Information List".
- To wait until the ink dries after printing before cutting the roll, set Drying Time in the printer driver. (See "Specifying the Ink Drying Time for Rolls.")
- Once you have used all the paper on a roll, clean the platen. If the platen inside the top cover becomes dirty, it may soil the underside of paper. (See "Cleaning Inside the Top Cover.")

1. Turn the printer on. (See "Turning the Printer On and Off.")

2. Load a roll on the Roll Holder. (See "Loading Rolls on the Roll Holder.")

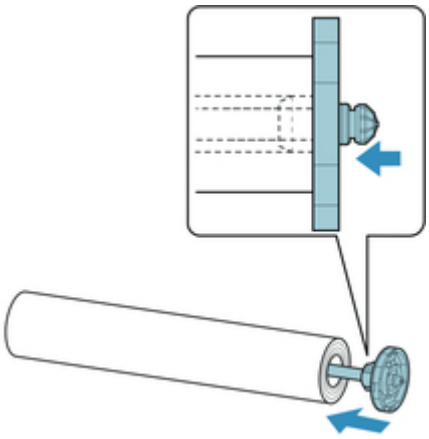

3. Load roll paper in printer or roll unit. (See "Loading the Upper Roll on the Printer.") (See "Loading the Lower Roll on the Roll Unit (Option).")

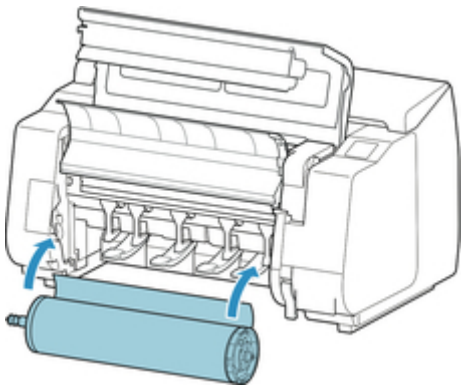

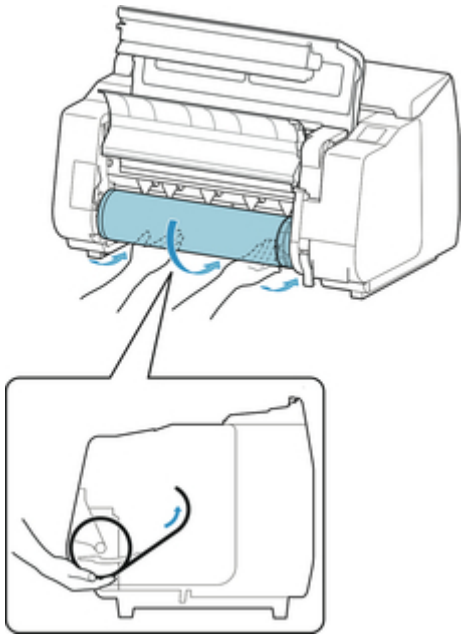

4. Select the type of paper. (See "Changing the Type of Paper.")

Note

- If no barcode has been printed on the roll paper and you have set **Manage remaining roll amount** to **Enable**, specify the roll length after selecting the media type. (See "Specifying the Paper Length.")

5. Complete settings in the printer driver for the type of paper and other details.

- How to Open the Printer Driver Setup Window (Windows)
- How to Open the Printer Driver Setup Window (Mac OS)

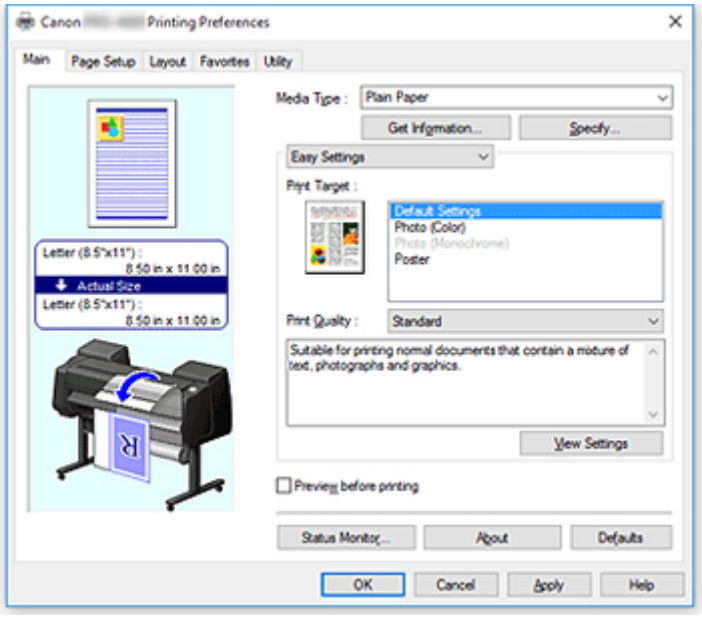

6. Send the print job.

   - Printing in Windows
   - Printing from Mac OS

   The printer now starts printing the print job.

Loading and Printing on Sheets

These are the basic steps for loading sheets and then printing.

Follow the steps below to load and print on sheets.

Note

- For details on paper sizes and types that can be loaded, see "Paper Sizes" or "Paper Information List".
- Borderless printing is not supported on sheets. For the features and the main printing methods available for sheet printing, see "Printing Options Using Rolls and Sheets."

1. Turn the printer on. (See "Turning the Printer On and Off.")

2. Complete settings in the printer driver for the type of paper and other details.
   - How to Open the Printer Driver Setup Window (Windows)
   - How to Open the Printer Driver Setup Window (Mac OS)

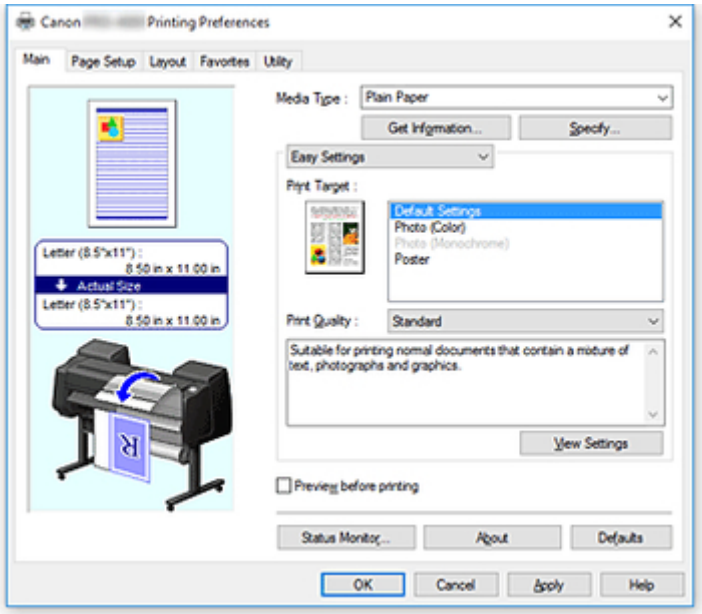

3. Send the print job.

   - Printing in Windows
   - Printing from Mac OS

4. Load the sheet. (See "Loading Sheets in the Printer.")

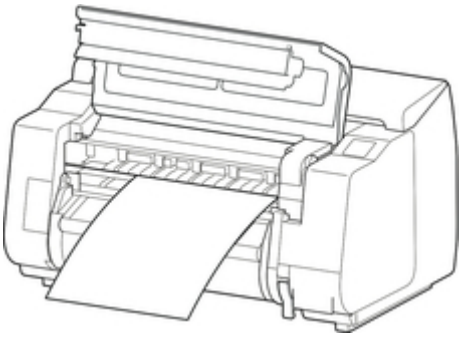

Start printing.

Printing in Windows

Print from the application menu.

Important

- We recommend exiting unnecessary applications before printing. Running several applications while printing may interrupt the transfer of print data and affect printing quality.

1. In the source application, select **Print** from the **File** menu to display the dialog box for printing conditions.

2. After confirming that the printer is selected in the dialog box, click **Print** or **OK** to start printing.

   Note

   - The appearance of the dialog box varies depending on the software application. In most cases, the dialog box includes basic printing options and enables you to choose the printer, specify the range of pages, number of copies, and so on.

     Example: Print dialog box displayed by the application

     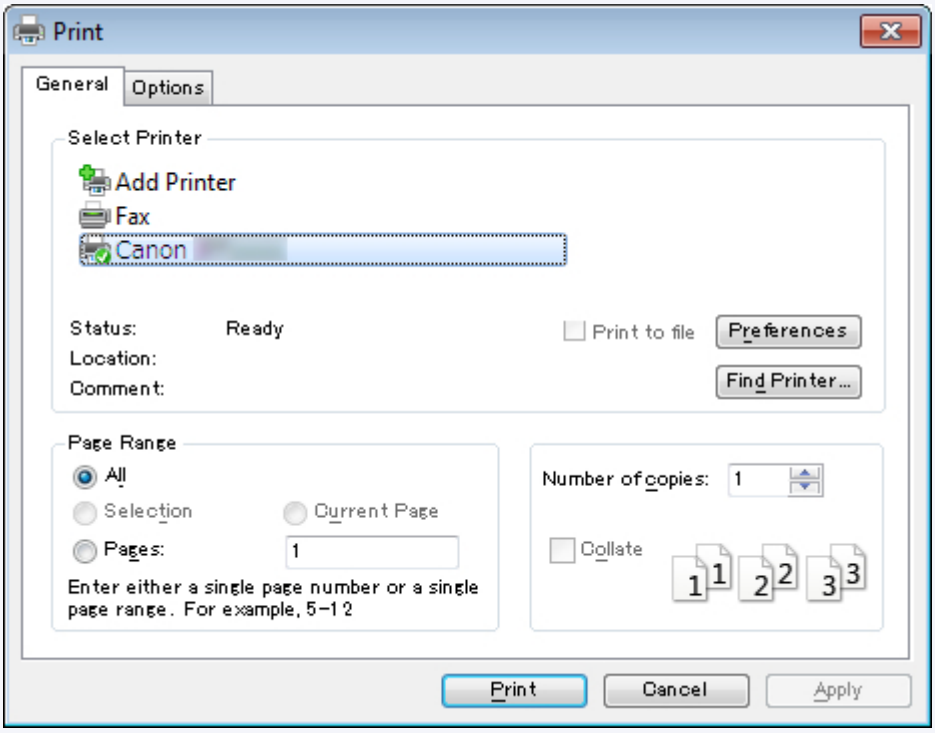

   - If another printer is selected, select the printer you want to use under **Select Printer** or in the dialog box displayed after clicking **Printer**.

You can use the printer driver dialog box to configure various printing settings such as for enlarged or reduced printing and borderless printing. You can open the printer driver dialog box from the application

software or from the operating system menu. For details, see "How to Open the Printer Driver Setup Window" (Windows) or "How to Open the Printer Driver Setup Window" (Mac OS).

Printing from Mac OS

Print from the application menu after registering the printer.

Important

- We recommend exiting unnecessary applications before printing. Running several applications while printing may interrupt the transfer of print data and affect printing quality.

Registering the printer

The printer needs to be registered in **Print & Scan** (identified as **Printers & Scanners** or **Print & Fax** in other versions of Mac OS X) in **System Preferences** before printing.

For instructions on registering printers, see "Sharing the Printer on a Network (Mac OS)."

Important

- During this setup process, the printer will not be listed among available printers if it is off or disconnected.

Printing from the application software

1. In the application software, select **Print** from the **File** menu to display the dialog box for printing conditions.

   Note

   - This dialog box includes basic printing options and enables you to choose the printer, specify the range of pages, number of copies, and so on.

2. Select the printer in the **Printer** list.

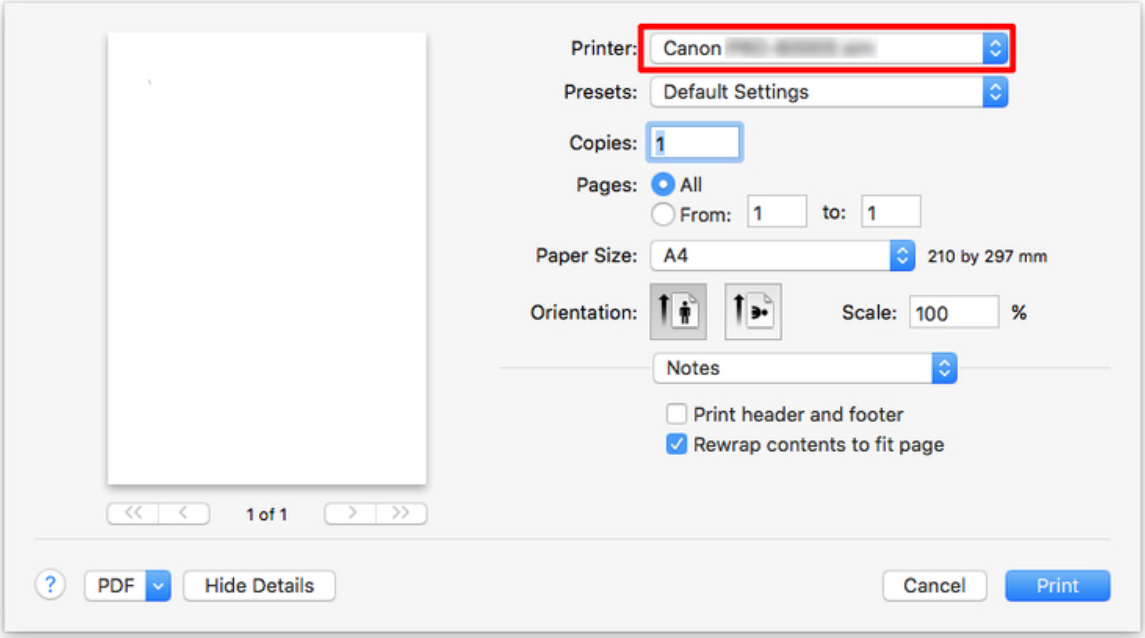

3. Click **Print** to start printing.

   As shown in the following illustration, you can switch to other panes in this dialog box to complete settings for various methods of printing, including enlarged and reduced printing, borderless printing, and so on.

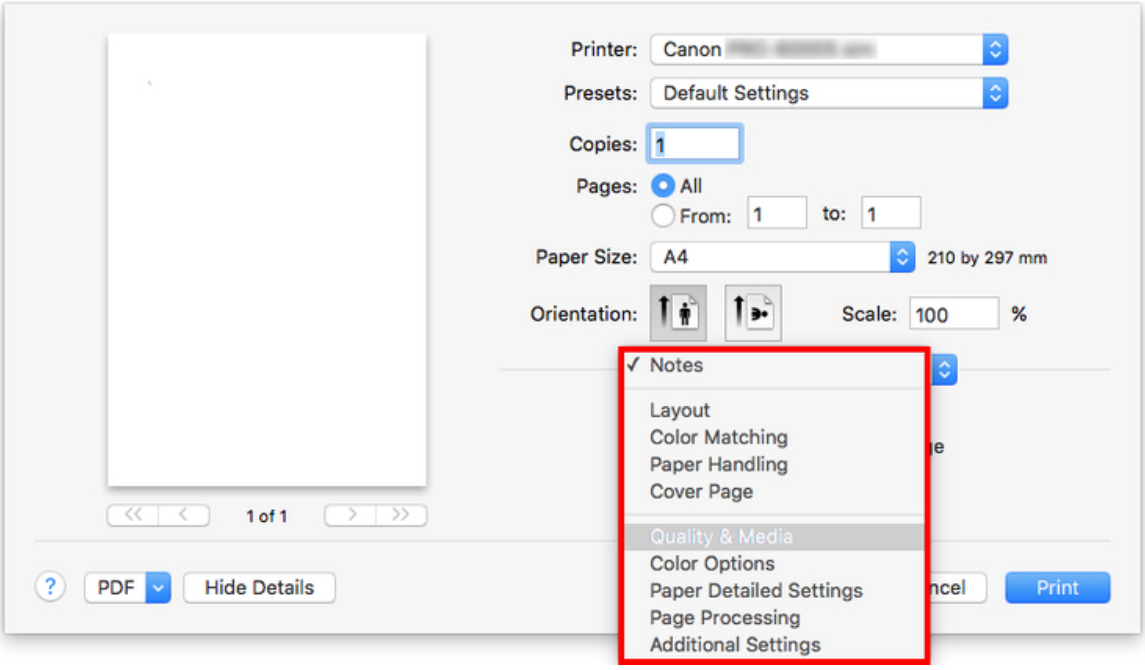

Canceling print jobs

- Canceling Print Jobs from the Control Panel
- Canceling Print Jobs from Windows
- Canceling Print Jobs from Mac OS

Canceling Print Jobs from the Control Panel

To cancel printing or reception of print jobs, press the **Stop** button on the operation panel.

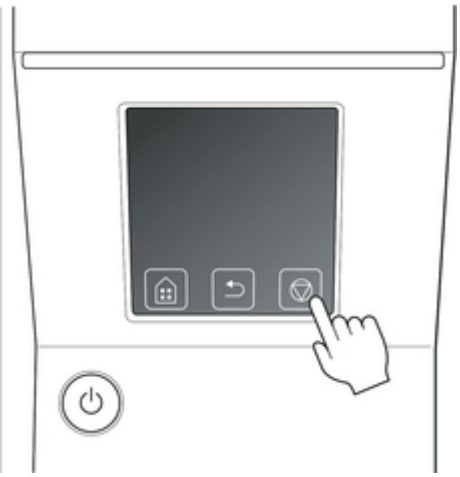

When you press the **Stop** button during printing, the printer operation varies depending on the current status.

- You press the **Stop** button before printing starts
  Pressing the **Stop** button before printing starts displays a confirmation message. To cancel the print job, select **Yes**.

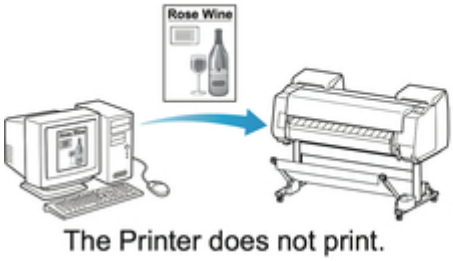

- You press the **Stop** button during printing
  Pressing the **Stop** button during printing displays a confirmation message. To cancel the print job immediately, select **Yes**.

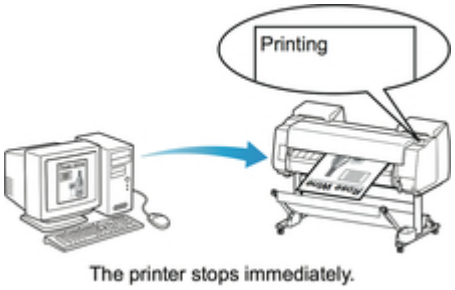

Canceling Print Jobs from Windows

In the printer window, you can cancel jobs that are being sent to the printer.

Using Canon IJ Status Monitor, you can cancel print jobs that have already been received by the printer or that are currently being printed.

1. Click the printer icon in the taskbar to display the printer window.

   Note

   - You can proceed from the folder for configuring the printer settings in the OS you are using.

     For example, in Windows 7, open the **Devices and Printers** window from the **start** menu and double-click the printer icon.

2. Right-click the job to cancel and select **Cancel**.

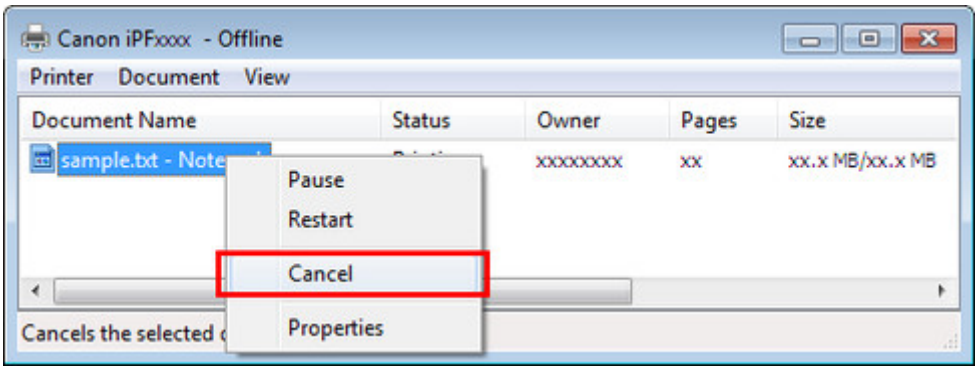

3. If job to be canceled is not shown in printer window (that is, if print data has already been received by printer), click taskbar icon to display Canon IJ Status Monitor.

4. Click **Cancel Printing**.

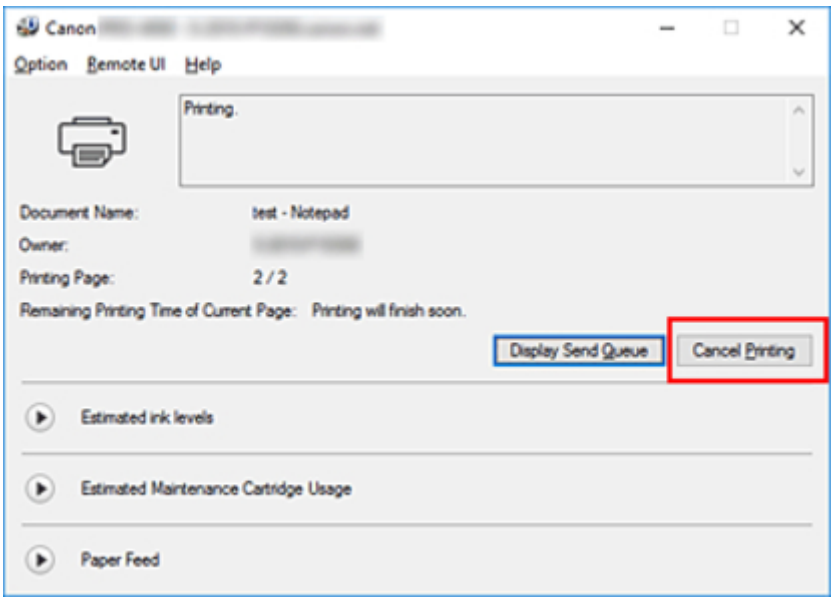

Note

- The screen may differ slightly depending on the model you are using.

Canceling Print Jobs from Mac OS

In the printer window, you can cancel jobs that are being sent to the printer.

Note

- Print jobs are shown in the printer window while they are being sent from the computer. After transmission, jobs are not displayed even during printing.

1. Click the printer icon in the **Dock** to display the printer window.

2. Either click × for the job to cancel printing or select the job to cancel printing and then click **Delete** to delete the job.

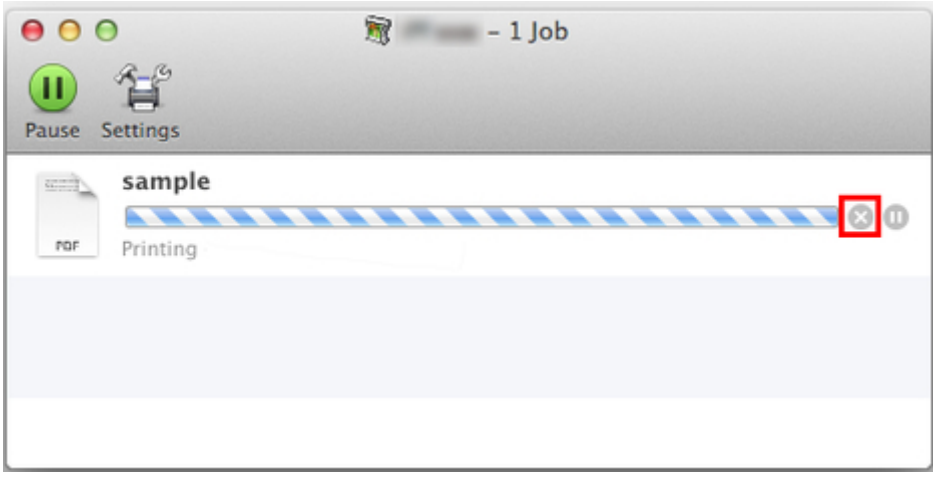

Note

- If the job to be canceled is not shown in the printer window (that is, if the print data has already been received by the printer), you can cancel printing from the operation panel on the printer or from RemoteUI. For details, "Canceling Print Jobs from the Control Panel" or see "Changing Settings Using Web Browser."

Pausing Printing

➡ Pausing Printing

Pausing Printing

During printing, if you set **Pause printing** to **Enable**, the printer enters a state in which printing is paused, after the completion of the printing process when this setting was made.

Printing from the job queue is not possible in this state.

To restore normal operation after pausing printing, set **Pause printing** to **Disable**.

Note

- In the following cases, the status is cleared even if you do not set **Pause printing** to **Disable**, and printing from the job queue resumes.
  - When paper is advanced
  - If you changed the media type from the paper settings display area

1. Tap **Job management** on Home screen during printing.

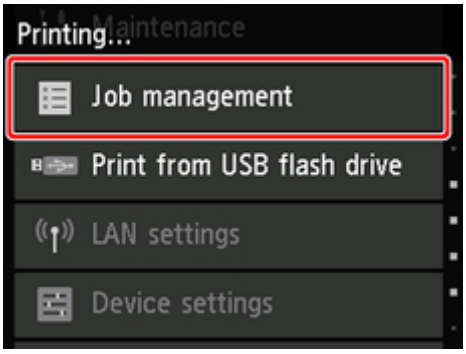

Note

- If the Home screen does not appear, press the **Home** button.

2. Tap **Pause printing**.

3. Tap **Enable** or **Disable**.

Enhanced Printing Options

Printing from Your Computer (Windows)

- Printing with Easy Setup Basics
  - Changing the Type of Paper
- Setting the Number of Copies and Printing Order
- Using Roll Unit to Use 2-Level Rolls
  - About 2-Level Roll Switching
  - Setting the Paper Rolls in the Printer According to the Intended Use
  - Printing by Automatically Switching Upper-level and Lower-level Roll Papers
  - How to Switch Paper Rolls
  - Reflect Roll Unit Settings in the Printer Driver
- Printing Photos and Business Documents
  - Printing By Setting Print Purpose
  - Edit in PosterArtist and Print
- Changing the Print Quality and Correcting Image Data
  - Adjusting Color Balance
  - Setting the Print Quality Level (Custom)
  - Printing a Color Document in Monochrome
  - Adjusting Tone
  - Specifying Color Correction
    - Optimal Photo Printing of Image Data
    - Adjusting Colors with the Printer Driver
    - Printing with ICC Profiles
    - Interpreting the ICC Profile
  - Adjusting Brightness
  - Adjusting Contrast
  - Printing Using Detailed Setting Mode
- Scaled Printing
- Printing to Oversized Paper Sizes

- Setting Paper Dimensions (Custom Size)
- Prints without Edges Based on the Scenarios
  - Printing without Margins to Match Paper Size
  - Printing without Margins to Match Roll Paper Width
  - Printing Full-Size without Margins
- Changing the Clear Coating Settings
- Printing Hanging and Horizontal Banners (Large-Format Printing)
- Printing by Dividing/Joining Documents
  - Lining Up and Printing Multiple Documents
  - Printing by Connecting Multiple Pages
  - Printing Multiple Pages All on One Page
  - Dividing and Printing Posters
- Printing Document in Center of Paper
- Printing by Saving Roll Paper
  - Saving Roll Paper by Rotating Document 90 Degrees
  - Saving Roll Paper by Eliminating Upper and Lower Margins on Document
- Switching the Paper Source to Match the Purpose
- Displaying the Print Results before Printing
- Other Convenient Settings
  - Stamp Printing
    - Registering a Stamp
  - Setting a Page Size and Orientation
  - Registering a Frequently Used Printing Profile
  - Cutting Roll Paper after Printing

Printing from Computer (Mac OS)

- Printing with Easy Setup Basics
  - Changing the Type of Paper
- Setting the Number of Copies and Printing Order

- Using Roll Unit to Use 2-Level Rolls
  - About 2-Level Roll Switching
  - Setting the Paper Rolls in the Printer According to the Intended Use
  - Printing by Automatically Switching Upper-level and Lower-level Roll Papers
  - How to Switch Paper Rolls
  - Reflect Roll Unit Settings in the Printer Driver
- Changing the Print Quality and Correcting Image Data
  - Adjusting Color Balance
  - Setting the Print Quality Level (Custom)
  - Printing a Color Document in Monochrome
  - Adjusting Tone
  - Specifying Color Correction
    - Optimal Photo Printing of Image Data
    - Adjusting Colors with the Printer Driver
    - Printing with ICC Profiles (Specifying an ICC Profile from the Application Software)
    - Printing with ICC Profiles (Specifying an ICC Profile from the Printer Driver)
    - Interpreting the ICC Profile
  - Adjusting Brightness
  - Adjusting Contrast
- Scaled Printing
- Printing to Oversized Paper Sizes
- Setting Paper Dimensions (Custom Size)
- Print Area
- Prints without Edges Based on the Scenarios
  - Printing without Margins to Match Roll Paper Width
  - Printing Full-Size without Margins
- Changing the Clear Coating Settings
- Printing Hanging and Horizontal Banners (Large-Format Printing)
- Printing by Dividing/Joining Documents

- Lining Up and Printing Multiple Documents
- Printing by Connecting Multiple Pages
- Printing Multiple Pages All on One Page

- Printing Document in Center of Paper
- Printing by Saving Roll Paper
  - Saving Roll Paper by Rotating Document 90 Degrees
  - Saving Roll Paper by Eliminating Upper and Lower Margins on Document
- Switching the Paper Source to Match the Purpose
- Cutting Roll Paper after Printing

Printing from Printer

- Printing from USB Flash Drive
  - Printing Data Saved on USB Flash Drive
  - Setting Items for Printing Using Operation Panel

Printing from Smartphone/Tablet

- Connecting Smartphone/Tablet to Printer Directly via Wireless LAN (Direct Connection)

Printing from Computer (Mac OS)

- **Printing with Easy Setup** Basics
  - Changing the Type of Paper
- **Setting the Number of Copies and Printing Order**
- **Using Roll Unit to Use 2-Level Rolls**
  - About 2-Level Roll Switching
  - Setting the Paper Rolls in the Printer According to the Intended Use
  - Printing by Automatically Switching Upper-level and Lower-level Roll Papers
  - How to Switch Paper Rolls
  - Reflect Roll Unit Settings in the Printer Driver
- **Changing the Print Quality and Correcting Image Data**
  - Adjusting Color Balance
  - Setting the Print Quality Level (Custom)
  - Printing a Color Document in Monochrome
  - Adjusting Tone
  - Specifying Color Correction
  - Adjusting Brightness
  - Adjusting Contrast
- **Scaled Printing**
- **Printing to Oversized Paper Sizes**
- **Setting Paper Dimensions (Custom Size)**
- **Print Area**
- **Prints without Edges Based on the Scenarios**
  - Printing without Margins to Match Roll Paper Width
  - Printing Full-Size without Margins
- **Changing the Clear Coating Settings**
- **Printing Hanging and Horizontal Banners (Large-Format Printing)**

- **Printing by Dividing/Joining Documents**
  - Lining Up and Printing Multiple Documents
  - Printing by Connecting Multiple Pages
  - Printing Multiple Pages All on One Page
- **Printing Document in Center of Paper**
- **Printing by Saving Roll Paper**
  - Saving Roll Paper by Rotating Document 90 Degrees
  - Saving Roll Paper by Eliminating Upper and Lower Margins on Document
- **Switching the Paper Source to Match the Purpose**
- **Cutting Roll Paper after Printing**

Printing with Easy Setup

The simple setup procedure for carrying out appropriate printing on this printer is as follows:

1. Check that the printer is turned on

2. Load paper on the printer

   Set roll paper or cut paper.

3. Select the printer

   Select your model from the **Printer** list in the Print Dialog.

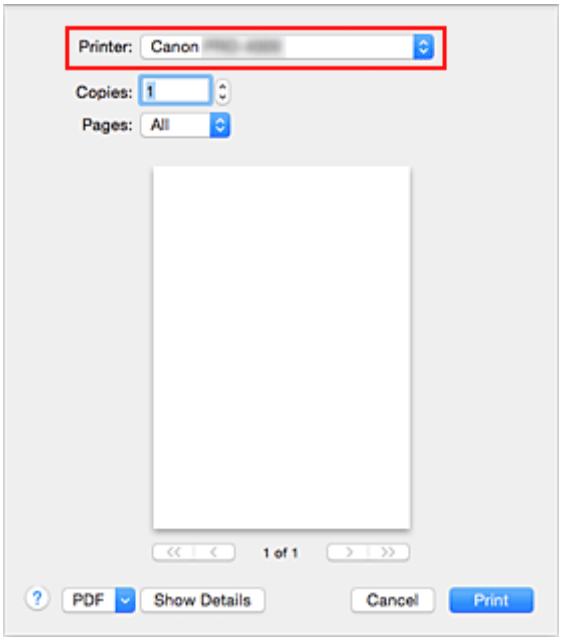

Note

- Click **Show Details** to switch the Setup window to the detailed display.
  However, depending on the application you are using, **Show Details** may not be displayed.

4. Select the paper size

   For **Paper Size**, select the paper size to be used.
   If necessary, set the number of copies, the pages to be printed, and the orientation.

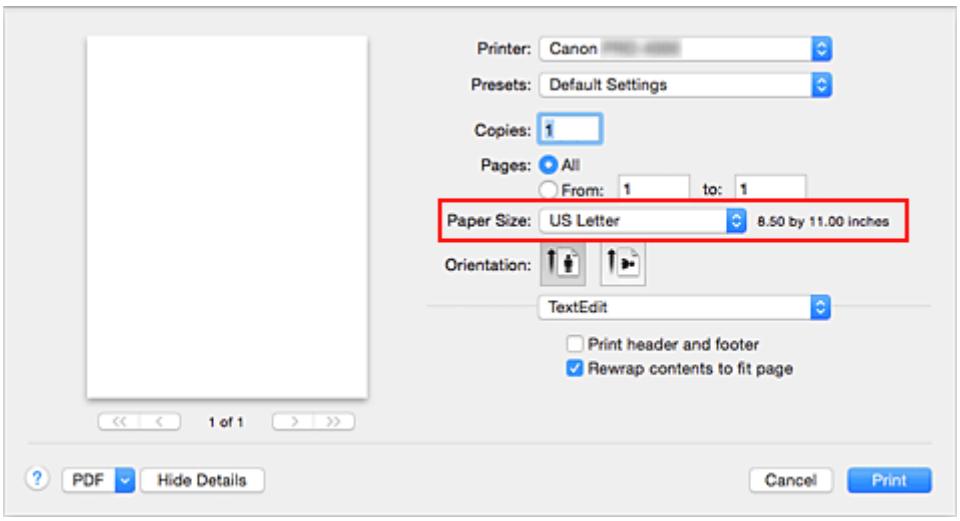

5. Select **Quality & Media** from the pop-up menu

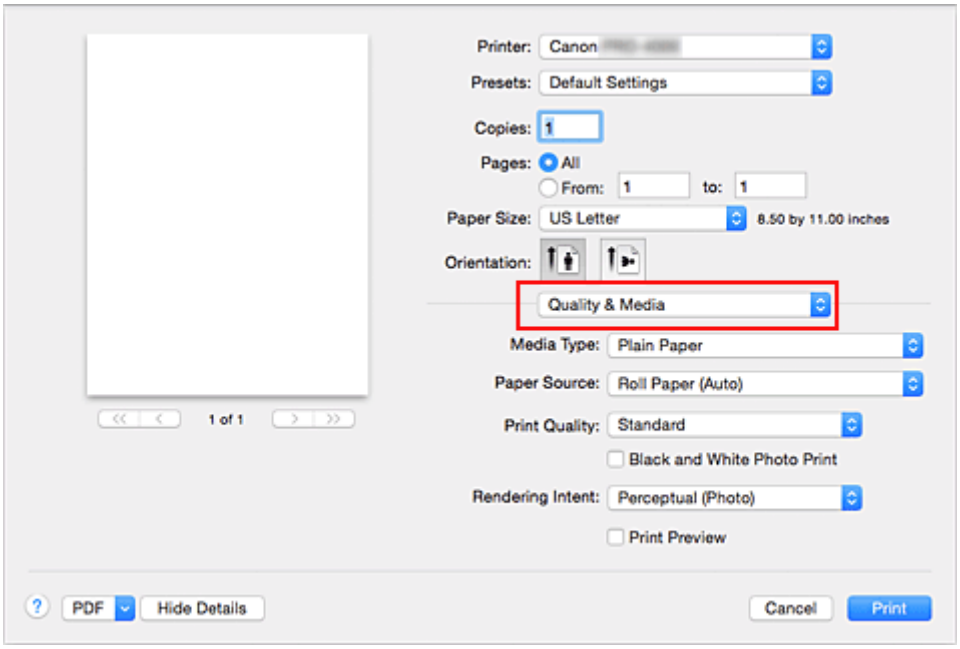

6. Select the media type

For **Media Type**, select the same paper type loaded in the printer.

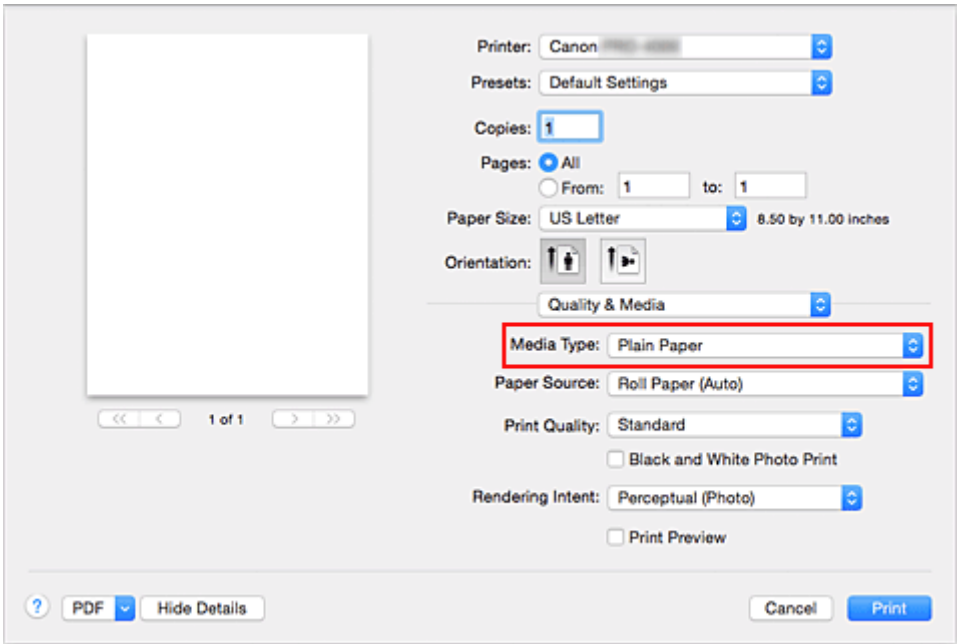

Important

- In the **Presets** section, click **Save Current Settings as Preset...** to register the specified settings.
- See "Paper Information List" for Canon authentic paper or Canon output check paper.

7. Select the paper source

For **Paper Source**, select the setting that matches your purpose.

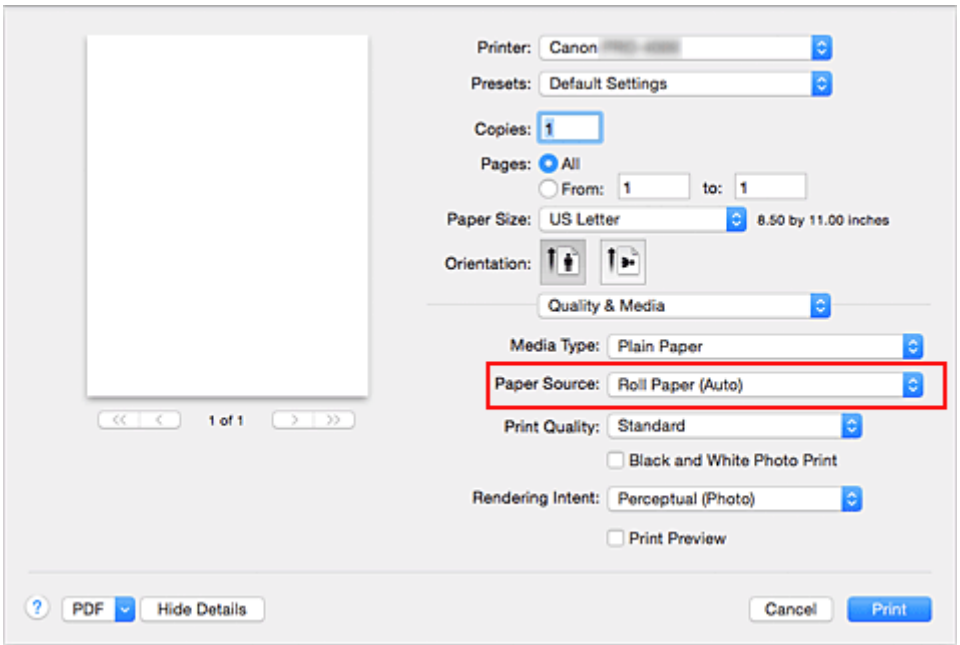

Important

- The paper feed method will differ according to the paper or lower level (roll paper 2) settings, or roll unit option settings.

8. Select the print quality

For **Print Quality**, select **Highest**, **High** or **Standard** according to your purpose.

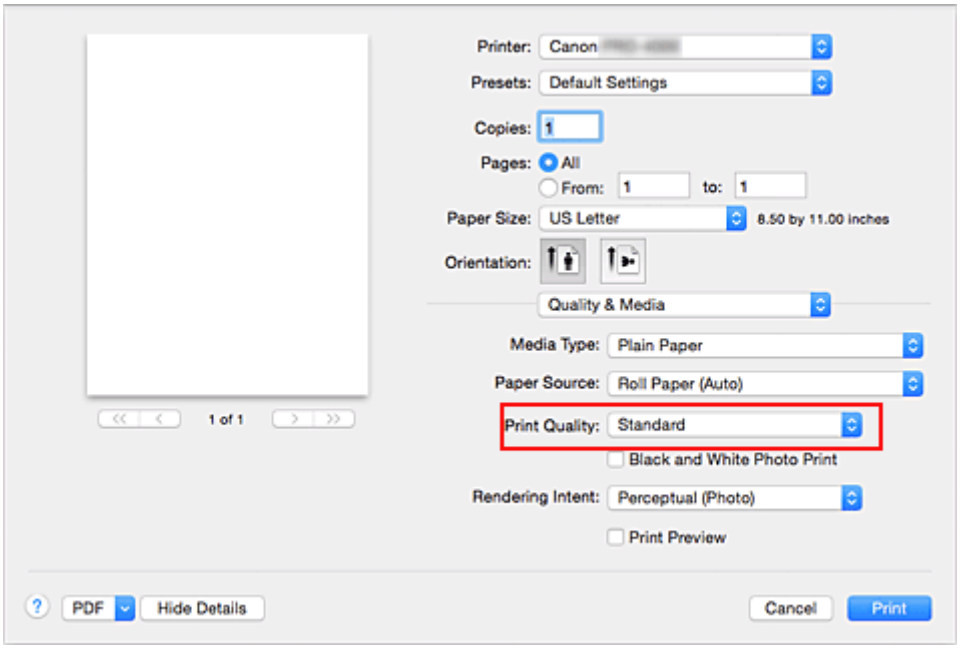

Important

- The print quality settings that can be selected may differ depending on a printing profile.

9. Select **Page Processing** from the pop-up menu

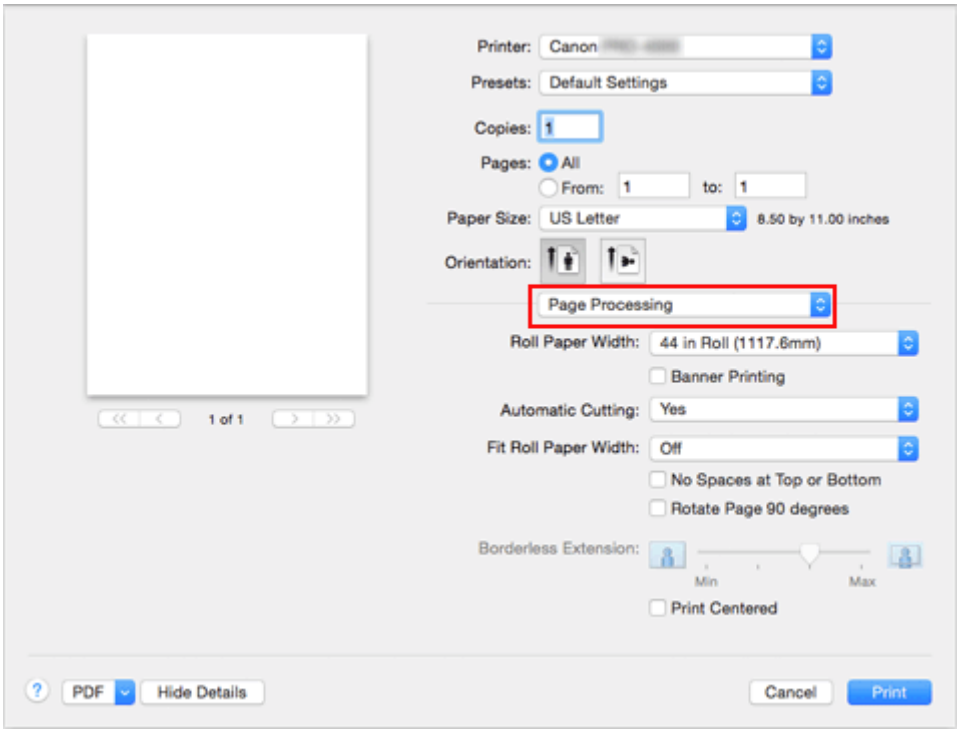

10. Selecting Roll Paper Width

If you selected a roll paper for **Paper Source**, set **Roll Paper Width** to the width of the roll paper loaded in the printer.

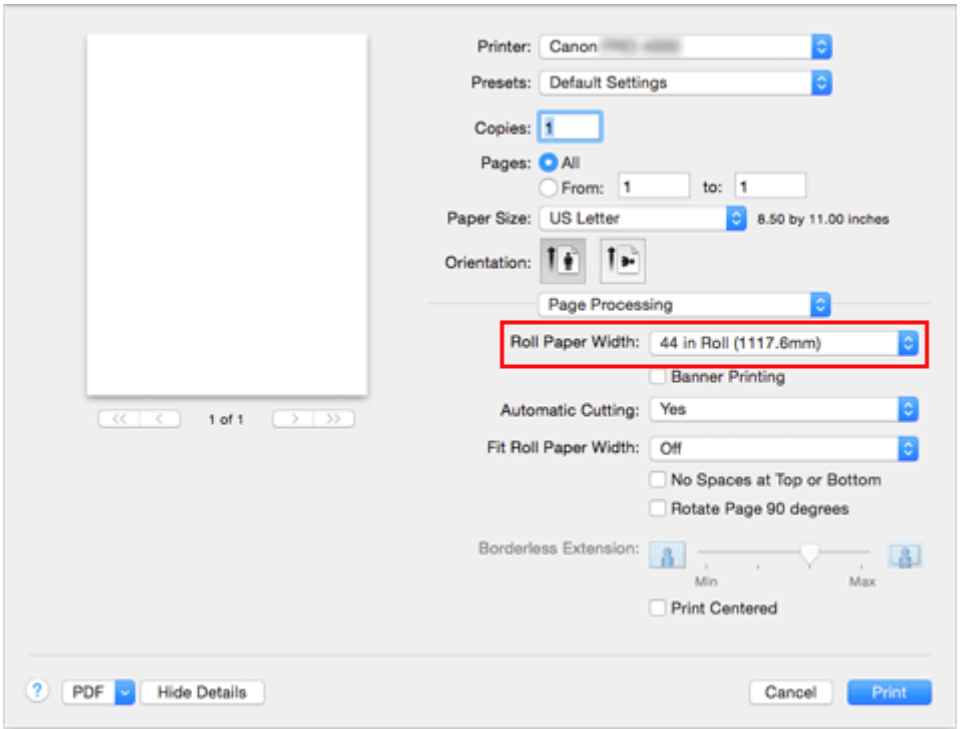

Important

- If **Cut Sheet** is selected for **Paper Source** in **Quality & Media**, **Roll Paper Width** is grayed out and cannot be set.

11. Complete the setup

Click **Print**.

When you execute print, the document will be printed in accordance with the type and size of the media.

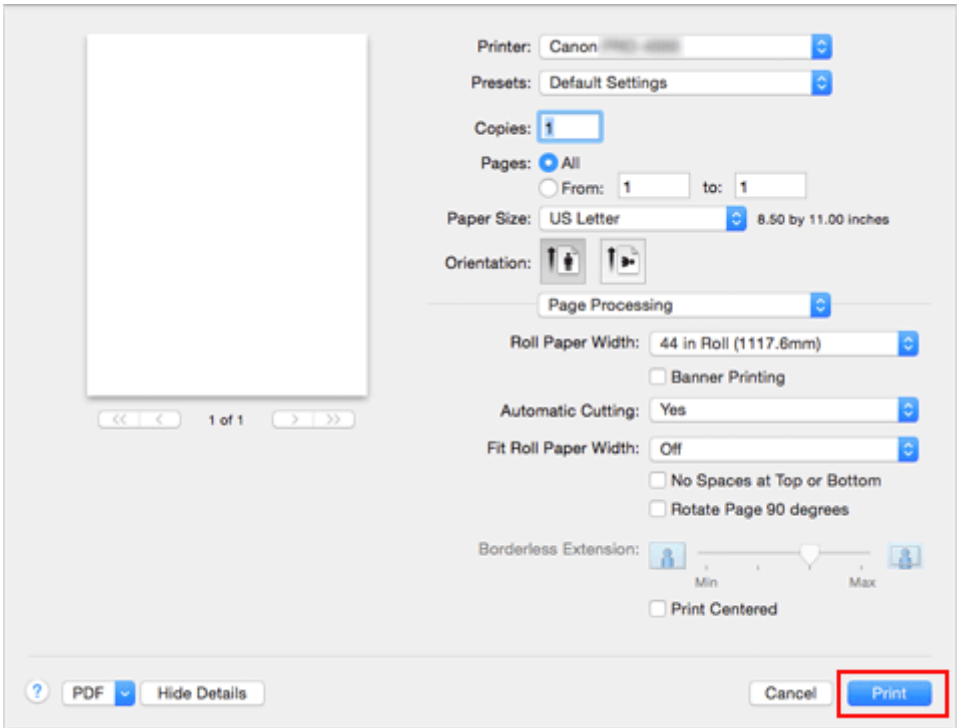

Note

- If the paper settings in the printer driver differ from the paper information registered on the printer, an error message may appear on the printer's operation panel. You can still print but you may not be able to obtain correct print results.

Setting the Number of Copies and Printing Order

Collate pages + Reverse **Collate pages + Normal** **Reverse**

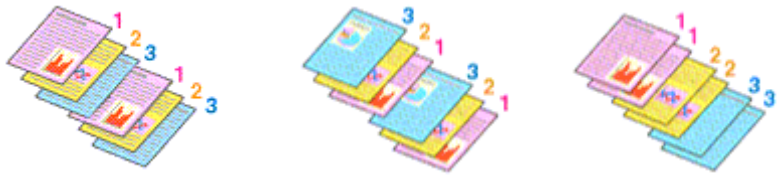

The procedure for specifying the number of copies and printing order is as follows:

1. Specify the number of copies to be printed

   Specify the number of copies to print from the **Copies** in the Print Dialog.

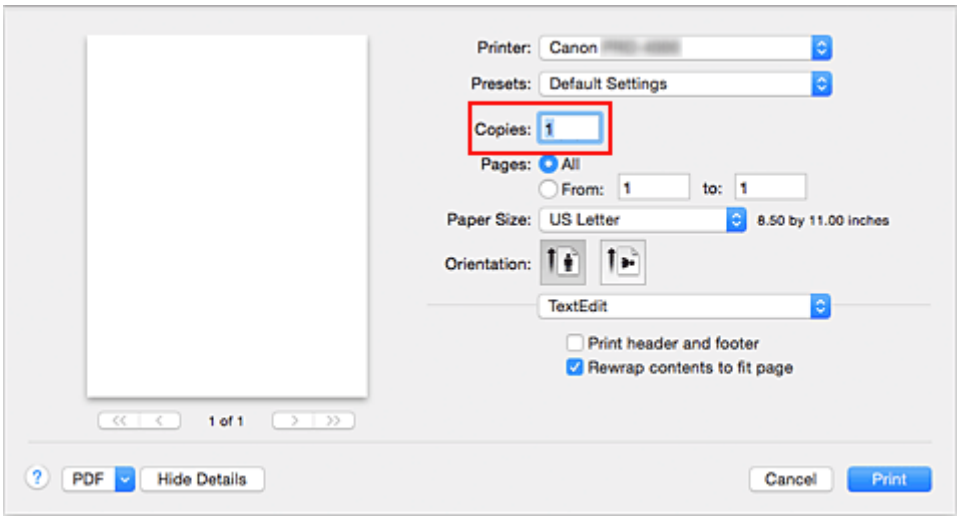

2. Select **Paper Handling** from the pop-up menu

3. Check the **Collate pages** check box when you are specifying multiple copies in the **Copies** box

   Check the **Collate pages** check box to print all the pages of a single copy together.
   Uncheck this check box to print all pages with the same page number together.

4. Specify the print order

   Check **Page Order**.

   When you select **Reverse**, printing starts from the last page.
   When you select **Automatic** or **Normal**, printing starts from the first page.

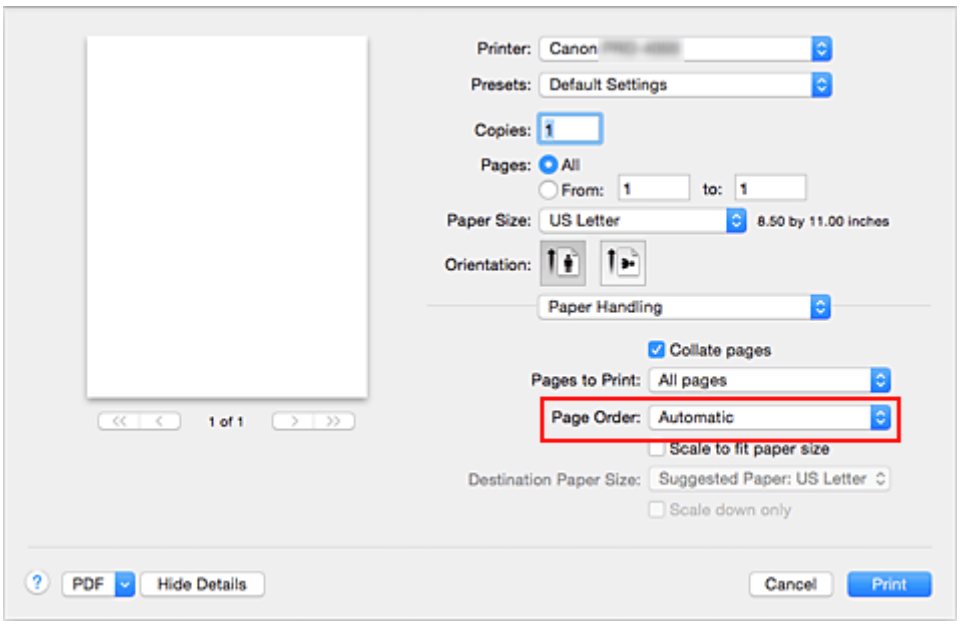

5. Complete the setup

   Click **Print**.

   When you execute print, the specified number of copies will be printed with the specified printing order.

Important

- When the application software that you used to create the document has the same function, specify the settings on the printer driver. However, if the print results are not acceptable, specify the function settings on the application software. When you specify the number of copies and the printing order with both the application software and this printer driver, the number of copies may be multiplied numbers of the two settings or the specified printing order may not be enabled.

Using Roll Unit to Use 2-Level Rolls

- About 2-Level Roll Switching
- Setting the Paper Rolls in the Printer According to the Intended Use
- Printing by Automatically Switching Upper-level and Lower-level Roll Papers
- How to Switch Paper Rolls
- Reflect Roll Unit Settings in the Printer Driver

About 2-Level Roll Switching

This printer allows you to load roll paper in two levels, the upper level (Roll 1) and the lower level (Roll 2) and to automatically switch between Roll 1 and Roll 2 depending on the print job.

Printing by automatically switching Roll 1 and Roll 2 in this way is called "2-level roll switching."

- For instructions on setting the paper, see "Loading Roll Papers in the Printer for Different Purposes."
- For the 2-level roll switching procedure, see "Printing by Automatically Switching Upper-level and Lower-level Roll Papers."
- Guidelines on how to switch Roll 1 and Roll 2 for certain cases are summarized in "Roll Paper Switching."
  Refer to this section if a document cannot be printed as intended or as necessary.

Setting the Paper Rolls in the Printer According to the Intended Use

If you want to switch the 2-level rolls, set the paper rolls on the upper and lower level of the printer in one of the ways described below depending on the intended use.

- When automatically switching from paper roll 1 to paper roll 2 to match the paper size specified for the print job

  Set two paper rolls of the same type of paper but of different width on the upper and on the lower trays.

  Example of how to set the paper

Paper-feeding tray	Roll Width	Media Type
Upper-level	36 in Roll (914.4mm)	Plain Paper
Lower-level	A1/A2 Roll (594.0mm)	Plain Paper

- When automatically switching from paper roll 1 to paper roll 2 role to match the paper type specified for the print job

  Set two paper rolls of the same width but of different types of paper on the upper and on the lower trays. Alternatively, set two paper rolls of different width and different types of paper on the upper and on the lower trays.

  Setting the paper (Example 1)

Paper-feeding tray	Roll Width	Media Type
Upper-level	A1/A2 Roll (594.0mm)	Plain Paper
Lower-level	A1/A2 Roll (594.0mm)	Canon Coated Paper

  Setting the paper (Example 2)

Paper-feeding tray	Roll Width	Media Type
Upper-level	36 in Roll (914.4mm)	Plain Paper
Lower-level	A1/A2 Roll (594.0mm)	Canon Coated Paper

Important

- 2-level roll switching is not possible when the paper rolls being fed on the platen are not compatible with automatic cut-off. For checking which types of paper are compatible with automatic cut-off, look up the paper you want to use on the "Paper Information List."

Note

- For information on how to set the paper rolls in the printer, see "Handling rolls"

- When rolls of different types of paper and of different width are set in the upper and lower trays, the paper roll matching the type of paper specified for the print job will be used.
  Depending on the settings, an error may occur causing the wrong paper roll to be used; in such cases, it is recommended that, instead of using 2-level roll switching, you specify which one is best between paper roll 1 and paper roll 2 and print.

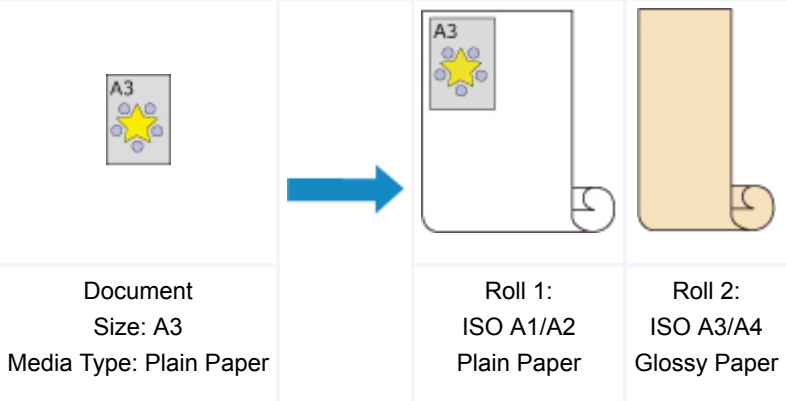

Document Size: A3 Media Type: Plain Paper		Roll 1: ISO A1/A2 Plain Paper	Roll 2: ISO A3/A4 Glossy Paper

- To learn how to switch paper- feeding trays, see "How to switch paper rolls."

Printing by Automatically Switching Upper-level and Lower-level Roll Papers

You can print by automatically switching Roll Paper 1 and Roll Paper 2 depending on the print job.

The procedure for printing by automatically switching Roll Paper 1 and Roll Paper 2 is as follows:

1. Selection of the Paper Size from the Print Dialog

   For the **Paper Size**, select the same size as the source document created by the application software.

2. Select **Quality & Media** from the pop-up menu of the Print Dialog

3. Select the media type

   For **Media Type**, select the same paper type loaded in the printer.

4. Select the paper source

   For **Paper Source**, select **Roll Paper (Auto)**.

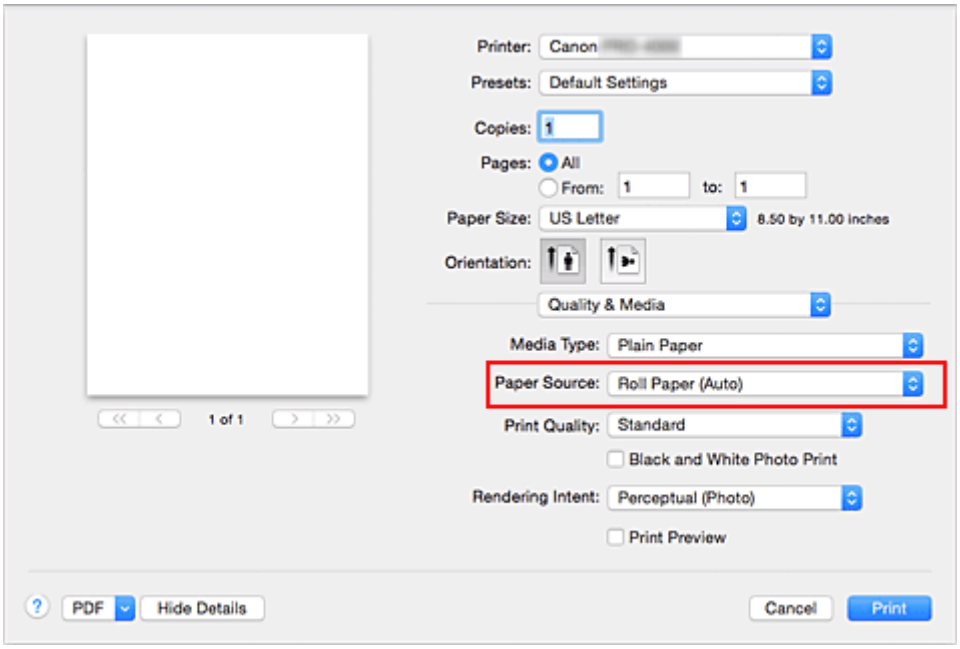

Important

- The paper feed method will differ according to the paper or lower level (roll paper 2) settings, or roll unit option settings.

5. Select **Page Processing** from the pop-up menu

6. Selecting Roll Paper Width

   For **Roll Paper Width**, select the width of the roll paper loaded in the printer.

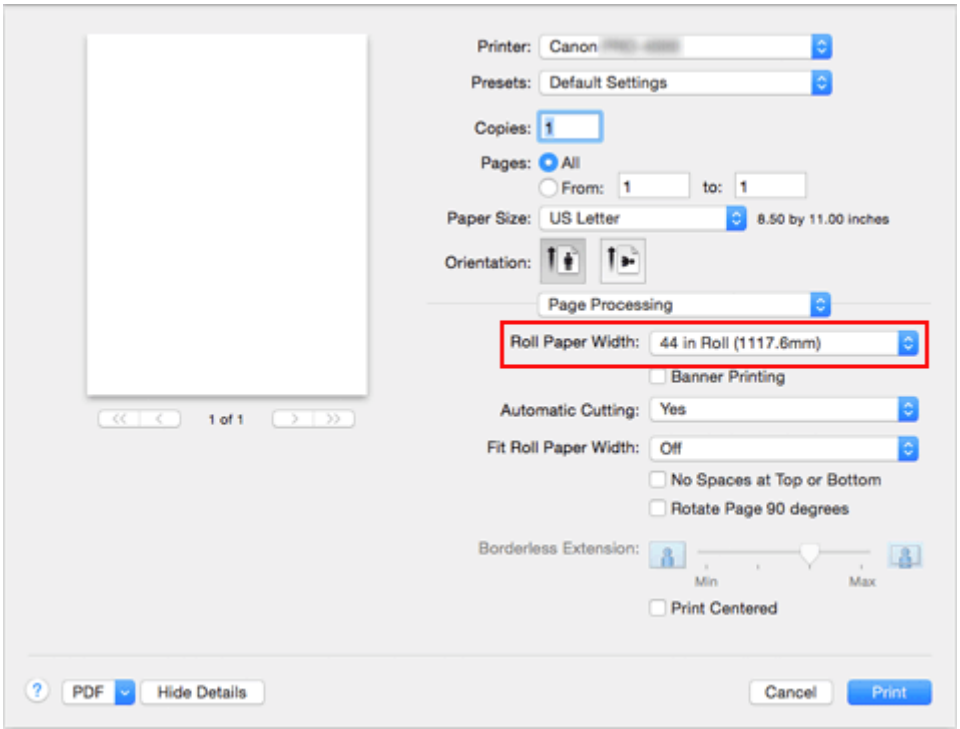

7. Selecting the printing method for the roll paper

   When performing enlarged/reduced printing of the source document in accordance with the roll paper width, select **On (Bordered)** or **On (Borderless)** from **Fit Roll Paper Width**.

8. Set the other items

   To rotate the document 90 degrees and print it, select the **Rotate Page 90 degrees** check box.

Note

- If you rotate a portrait document 90 degrees and print it at that horizontally, you may be able to save paper depending on the paper size.

Important

- When you select the **Rotate Page 90 degrees** check box and print the document, the document will be rotated 90 degrees only if the vertical length of the document fits in the width set in **Roll Paper Width**.
  Therefore to use this function, correctly set **Roll Paper Width** to the width of one of the roll papers loaded in the printer.

Document		Roll Width: ISO A1/A2 Roll (594.0 mm)

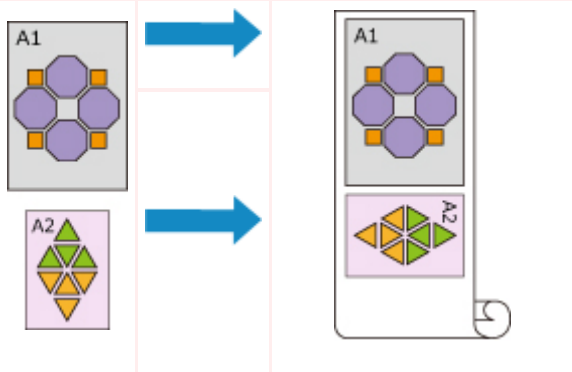

- If the roll papers loaded in the upper and lower levels are different media types, the document is printed on the roll paper that matches the media type specified in the print job.
  If the document is being rotated 90 degrees for printing and the roll papers loaded in the upper and lower levels have different widths and different media types, set the correct combination of width and media type so that they match one of the roll papers loaded in the printer.

9. Complete the setup

   Click **Print**.
   When you print, the paper source is switched automatically to roll paper.

Important

- On the operation panel, if **Device settings** -> **Paper-related settings** -> **Roll paper auto switching** is set to **Do not identify size**, the document may be printed on the unintended roll paper. Canon recommends that you set this setting to **Identify size** before you print.
- 2-level roll switching is not possible when the paper rolls being fed on the platen are not compatible with automatic cut-off. For checking which types of paper are compatible with automatic cut-off, look up the paper you want to use on the "Paper Information List."

Note

- For details about how to switch the source levels depending on the print job, see "How to Switch Paper Rolls."

How to Switch Paper Rolls

Here we will explain how, in certain situations, paper roll 1 and paper roll 2 are switched. Refer to this information when necessary, for example, when documents will not print as expected, etc.

If you select **Roll Paper (Auto)** under **Paper Source** in the **Quality & Media**, of the two paper rolls loaded in the lower and upper trays of the printer, the one best suited for the print job will be automatically selected.

Whether paper roll 1 or paper roll 2 will be used, is determined through a sequence of judgment based on the 7 conditions in the table below.

At such times, the **Device settings** -> **Paper-related settings** -> **Detect paper setting mismatch** in the Printer unit's Control panel will switch to the result of the judgment based on the process described below.

- If the **Detect paper setting mismatch** setting is set on **Pause** or **Hold job**
- If the **Detect paper setting mismatch** setting is **Display warning** or **Do not detect**

Important

- If the lower roll paper unit is not loaded or if the roll unit that was set as the take-up unit is loaded, the roll paper cannot be switched automatically.

Note

- If Error or On hold are displayed, replace the paper to match the requirements of the print job.
- In order to minimize paper waste, it is recommended that you configure the control panel on the Printer unit as indicated below.
  - In **Device settings** -> **Paper-related settings**, set **Roll paper auto switching** to **Identify size**
  - In Paper settings display area -> (Each paper type) -> **Paper settings** -> **Advanced**, set **Detect paper width** to **Enable**

If the Detect paper setting mismatch setting is set on Pause or Hold job

Condition		Situation	Judgment result
Condition 1	Whether the paper roll loaded on the printer is long enough to print the paper size specified for the print job.	Only one of either paper roll 1 or paper roll 2 is long enough	Select the paper roll of sufficient length
		Neither paper roll 1 nor paper roll 2 are long enough	Error
		Both paper roll 1 and paper roll 2 are long enough	To Condition 2
		On the Printer's menu, **Manage remaining roll amount** is set on **Disable** (length of the paper roll cannot be determined)	
Condition 2	Whether the paper roll loaded on the printer matches the paper type specified for the print job.	Only one of either paper roll 1 or paper roll 2 matches the paper type	Select the paper roll matching the paper type

		Neither roll 1 nor roll 2 match the paper type	Error / On hold
		Both paper roll 1 and paper roll 2 match the paper type	To Condition 3
Condition 3	In the Printer menu, how has the **Roll paper auto switching** setting changed?	It has changed to **Do not identify size**	Select the paper roll currently being fed into the platen *1
		It has changed to **Identify size**	To Condition 4
Condition 4	If borderless printing has been indicated for the print job (if it has not, on to condition 5)	Only one of either paper roll 1 or paper roll 2 is compatible with borderless printing	Select the paper roll compatible with borderless printing
		Neither paper roll 1 nor paper roll 2 are compatible with borderless printing	Error
		Both paper roll 1 and paper roll 2 are compatible with borderless printing	To Condition 5
Condition 5	Whether the width of the paper roll loaded on the printer matches the paper width specified for the print job (only when printing borderless or enlarging/reducing)	Only one of either paper roll 1 or paper roll 2 has the width specified for the print job	Select the paper roll of the matching width
		Neither paper roll 1 nor paper roll 2 have a width matching the one specified for the print job	Error / On hold
		Both paper roll 1 and paper roll 2 have a width matching the one specified for the print job	To Condition 6
		Paper roll width has not been specified for the print job	
Condition 6	Whether the width of the paper size specified for the print job fits within the width of the paper roll loaded on the printer.	The width of the paper size specified for the print job only fits within the width of paper roll 1 or paper roll 2	Select the paper roll in which the width of the paper size fits comfortably
		The width of the paper size specified for the print job does not fit within the width of either paper roll 1 or paper roll 2	Error
		The width of the paper size specified for the print job fits within the	To Condition 7

		width of both paper roll 1 and paper roll 2	
Condition 7	Is the width of paper roll 1 different from the width of paper roll 2?	Roll width is different	Select the paper roll whose width is closer to the width specified for the print job
		Roll width is the same	Select the paper roll currently being fed into the platen *1

*1 In the following cases, neither roll 1 nor roll 2 are being fed onto the platen. In such cases, paper roll 1 is selected.

- When the printer has switched to sleep mode and has returned to the initial position
- When the printer has been turned on
- When cut paper has been fed into the printer and has exited it

If the Detect paper setting mismatch setting is set on Display warning or Do not detect

Condition		Situation	Judgment result
Condition 1	Whether the paper roll loaded on the printer is long enough to print the paper size specified for the print job.	Only one of either paper roll 1 or paper roll 2 is long enough	Select the paper roll of sufficient length
		Neither paper roll 1 nor paper roll 2 are long enough	Error
		Both paper roll 1 and paper roll 2 are long enough	To Condition 2
		On the Printer's menu, **Manage remaining roll amount** is set on **Disable** (length of the paper roll cannot be determined)	
Condition 2	Whether the paper roll loaded on the printer matches the paper type specified for the print job.	Only one of either paper roll 1 or paper roll 2 matches the paper type	Select the paper roll matching the paper type
		Neither roll 1 nor roll 2 match the paper type	To Condition 3
		Both paper roll 1 and paper roll 2 match the paper type	
Condition 3	In the Printer menu, how has the **Roll paper auto switching** setting changed?	It has changed to **Do not identify size**	Select the paper roll currently being

			fed into the platen *1
		It has changed to **Identify size**	To Condition 4
Condition 4	If borderless printing has been indicated for the print job (if it has not, on to condition 5)	Only one of either paper roll 1 or paper roll 2 is compatible with borderless printing	Select the paper roll compatible with borderless printing
		Neither paper roll 1 nor paper roll 2 are compatible with borderless printing	Error
		Both paper roll 1 and paper roll 2 are compatible with borderless printing	To Condition 5
Condition 5	Whether the width of the paper roll loaded on the printer matches the paper width specified for the print job (only when printing borderless or enlarging/reducing)	Only one of either paper roll 1 or paper roll 2 has the width specified for the print job	Select the paper roll of the matching width
		Neither paper roll 1 nor paper roll 2 have a width matching the one specified for the print job	To Condition 6
		Both paper roll 1 and paper roll 2 have a width matching the one specified for the print job	
		Paper roll width has not been specified for the print job	
Condition 6	Whether the width of the paper size specified for the print job fits within the width of the paper roll loaded on the printer.	The width of the paper size specified for the print job only fits within the width of paper roll 1 or paper roll 2	Select the paper roll in which the width of the paper size fits comfortably
		The width of the paper size specified for the print job does not fit within the width of either paper roll 1 or paper roll 2	To Condition 7
		The width of the paper size specified for the print job fits within the width of both paper roll 1 and paper roll 2	
Condition 7	Is the width of paper roll 1 different from the width of paper roll 2?	Roll width is different	Select the paper roll whose width is closer to the width specified for the print job

		Roll width is the same	Select the paper roll currently being fed into the platen *1

*1 In the following cases, neither roll 1 nor roll 2 are being fed onto the platen. In such cases, paper roll 1 is selected.

- When the printer has switched to sleep mode and has returned to the initial position
- When the printer has been turned on
- When cut paper has been fed into the printer and has exited it

Reflect Roll Unit Settings in the Printer Driver

Configure the settings of the roll unit in the printer driver so that they reflect those in the printer unit.
If you configure the settings of the roll unit in the printer driver so that they reflect those in the printer unit, the paper-feeding methods which can be set in the printer driver will switch to the state the printer unit was in.

Procedure for configuring the settings of the roll unit in the printer driver so that they reflect those in the printer unit.

1. Open **System Preferences** and select **Printers & Scanners** (**Print & Scan**)

2. Select the name of your model from the list of printers and click **Options & Supplies...**

3. Reflect the settings of the roll unit

   If you are using the lower tray (paper roll 2) as paper-feeding tray, place a checkmark next to **Roll Unit** in the **Options** tab (or the **Driver** tab).

Important

- If the roll paper unit of the lower tray is not installed, or if the roll unit set in the winding device is installed, uncheck **Roll Unit**.

Note

- Roll unit settings are automatically updated even when you are printing from the printer driver.

Changing the Print Quality and Correcting Image Data

- Adjusting Color Balance
- Setting the Print Quality Level (Custom)
- Printing a Color Document in Monochrome
- Adjusting Tone
- Specifying Color Correction
- Adjusting Brightness
- Adjusting Contrast

Adjusting Color Balance

You can adjust the color tints when printing.
Since this function adjusts color balance of the output by changing the ink ratios of each color, it changes the total color balance of the document. Use the application software when you want to change the color balance significantly. Use the printer driver only when you want to adjust the color balance slightly.
The following sample shows the case when color balance is used to intensify cyan and to diminish yellow so that the overall colors are more uniform.

No adjustment

Adjust color balance

The procedure for adjusting color balance is as follows:

1. Select **Color Options** from the pop-up menu of the Print Dialog

2. Adjust color balance

   There are individual sliders for **Cyan**, **Magenta**, and **Yellow**. Each color becomes stronger when the corresponding slider is moved to the right, and becomes weaker when the corresponding slider is moved to the left. For example, when cyan becomes weaker, the color red becomes stronger.
   You can also directly enter a value linked to the slider. Enter a value in the range from -50 to 50. The current settings are displayed in the settings preview on the left side of the printer driver.

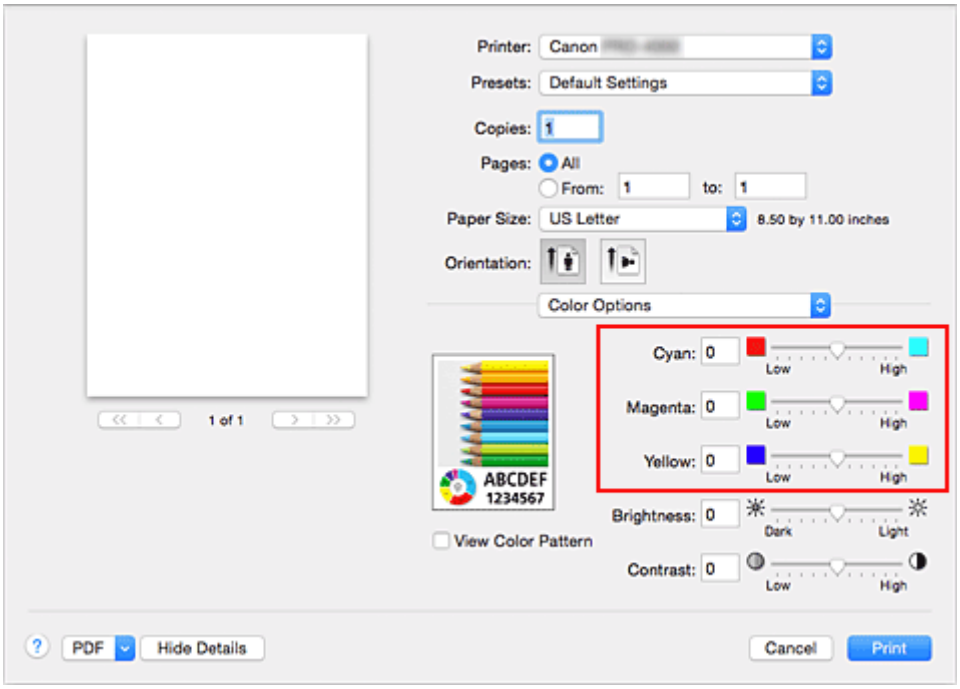

3. Complete the setup

   Click **Print**.
   When you execute print, the document is printed with the adjusted color balance.

Important

- When the **Black and White Photo Print** check box is checked for **Quality & Media**, the color balance (**Cyan**, **Magenta**, **Yellow**) are unavailable.
- If you select **ColorSync** for **Color Matching**, then the color balance (**Cyan**, **Magenta**, **Yellow**) appear grayed out and are unavailable.

Related Topics

- Setting the Print Quality Level (Custom)
- Specifying Color Correction
- Adjusting Brightness
- Adjusting Contrast

Setting the Print Quality Level (Custom)

The print quality level can be set in the **Custom**.

The procedure for setting the print quality level is as follows:

1. Select **Quality & Media** from the pop-up menu on the Print Dialog

2. Select the print quality

   Select **Custom** for **Print Quality**.

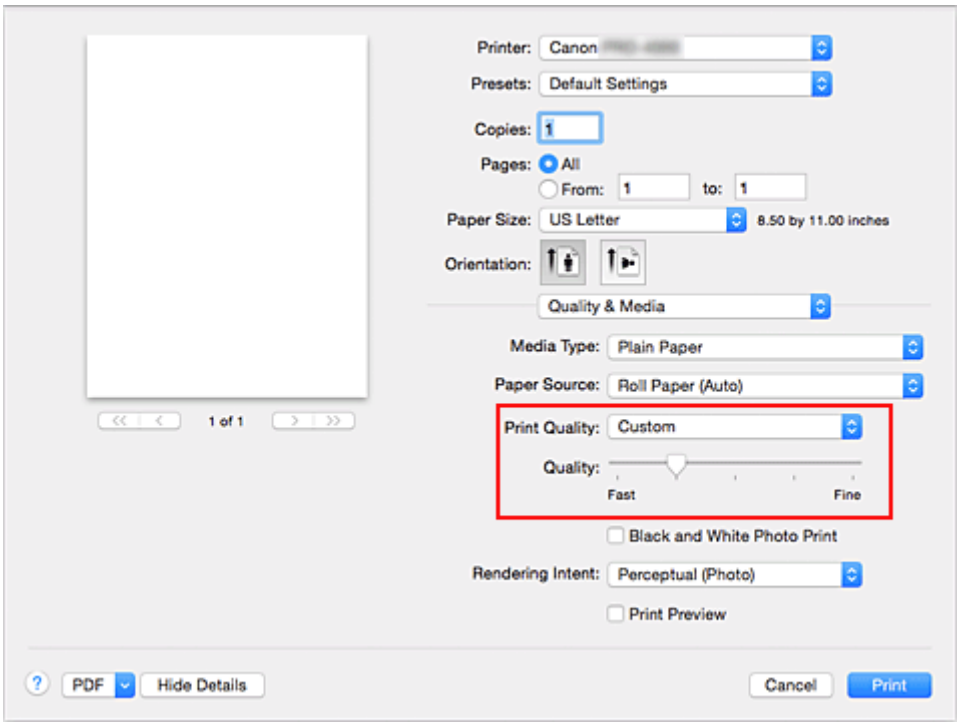

3. Setting the print quality level

   Move the **Quality** slider to select the print quality level.

4. Complete the setup

   Click **Print**.
   When you execute print, the image data is printed with the selected print quality level.

Important

- Certain print quality levels cannot be selected depending on the settings of **Media Type**.

Related Topics

- Specifying Color Correction
- Adjusting Color Balance
- Adjusting Brightness
- Adjusting Contrast

Printing a Color Document in Monochrome

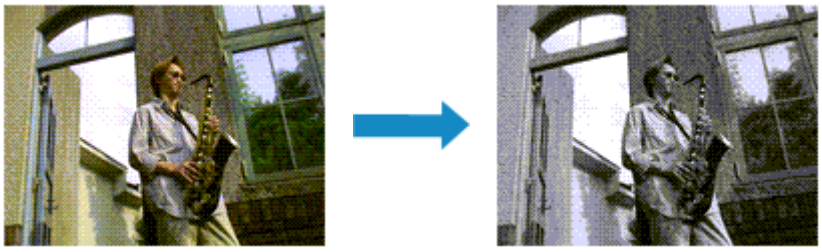

The procedure for printing a color document in monochrome is as follows:

1. Select **Quality & Media** from the pop-up menu on the Print Dialog

2. Set black and white photo printing

   Check the **Black and White Photo Print** check box.

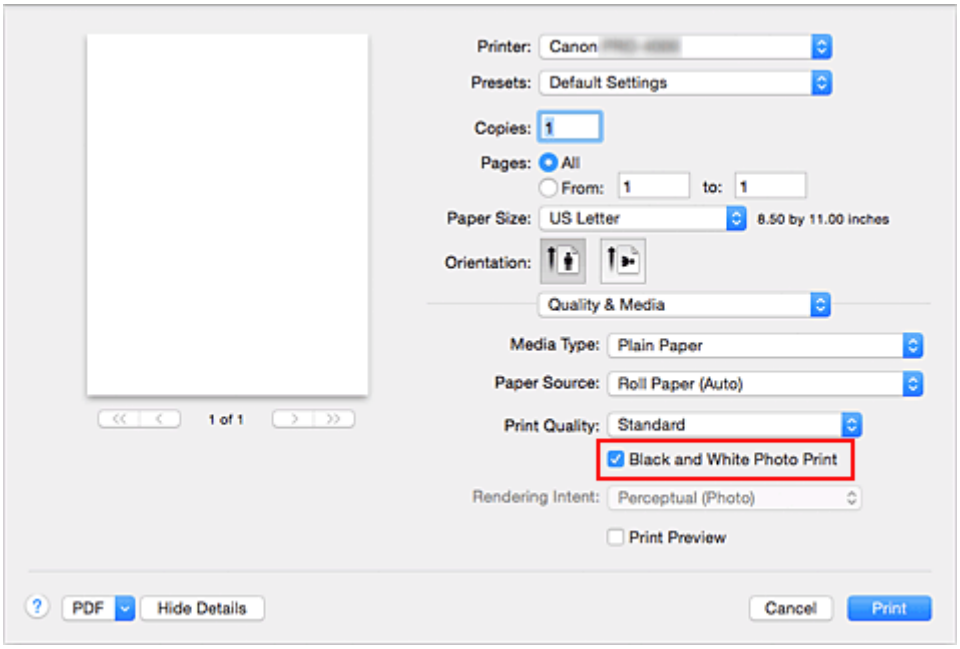

3. Complete the setup

   Click **Print**.
   When you execute print, the document is converted to grayscale data. It allows you to print the color document in monochrome.

Note

- With **Black and White Photo Print**, inks other than black ink may be used as well.

Related Topic

- Adjusting Tone

Adjusting Tone

When printing black and white photos, you can produce the cooling effects of cool colors and the warming effects of warm colors.

Cool Tone is selected

Black and White is selected

Warm Tone is selected

The procedure for adjusting tone is as follows:

1. Select **Quality & Media** from the pop-up menu of the Print Dialog

2. Selecting the paper with **Media Type**

   For paper for which the black and white tone can be adjusted, select the paper you want to use from "Paper Information List" and check the information.

3. Set black and white photo printing

   Check the **Black and White Photo Print** check box.

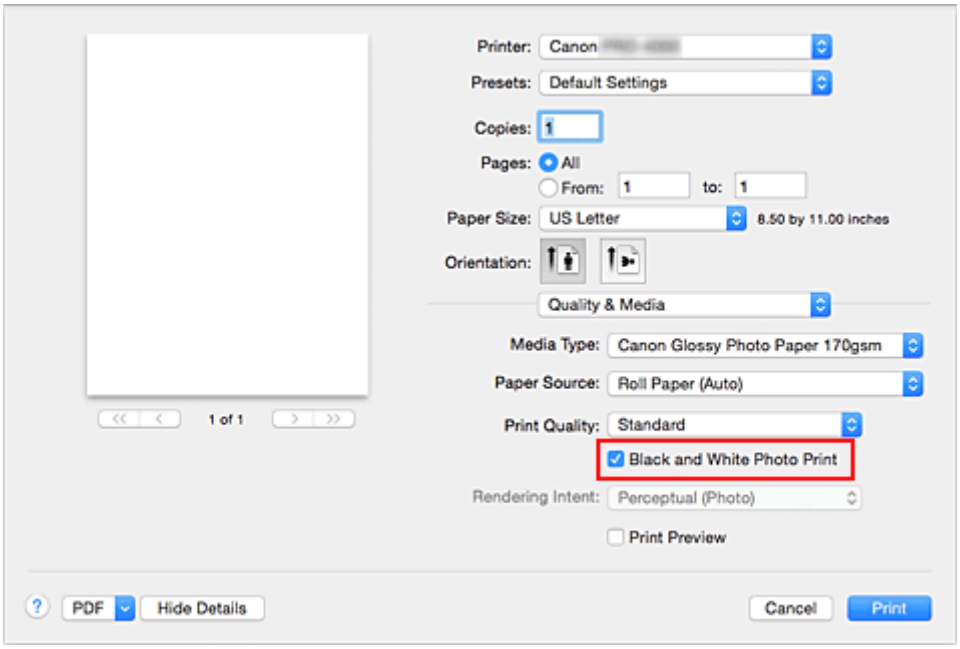

4. Select **Color Options** from the pop-up menu

5. Adjusting monochrome tones

   Specify one of the following items from **Tone**. The selected value will be shown in the preview on the left side.

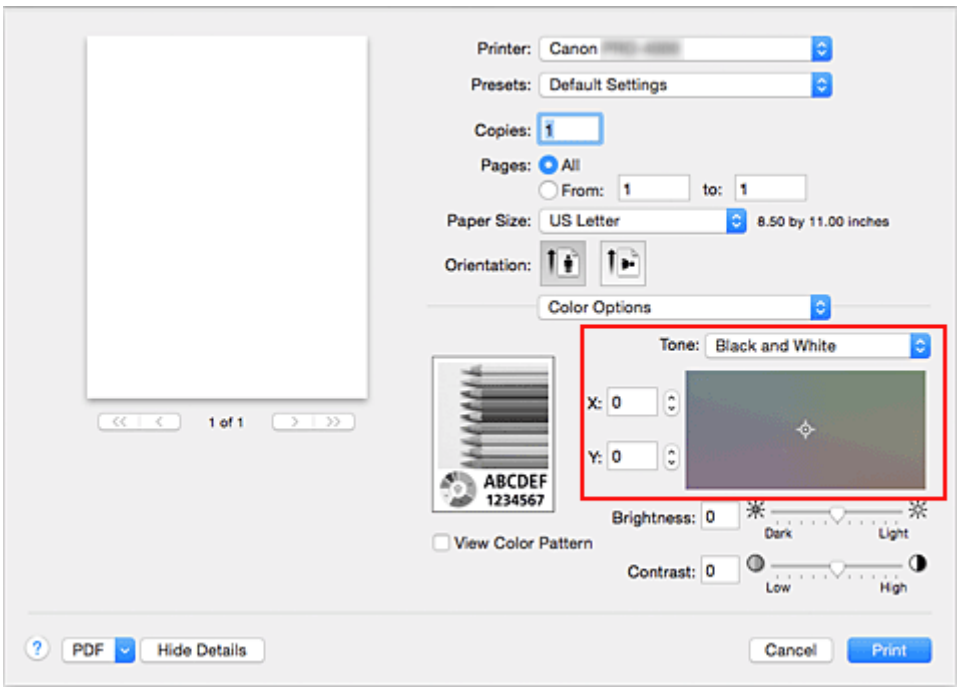

Cool Tone

This item adjusts color tones to cool shades (cool black). When you select **Cool Tone**, a value of -30 is entered for **X**, and a value of 0 for **Y**.

Black and White

This item adjusts color tones to neutral shades. When you select **Black and White**, a value of 0 is entered for **X**, and a value of 0 for **Y**.

Warm Tone

This item adjusts color tones to warm shades (warm black). When you select **Warm Tone**, a value of 30 is entered for **X**, and a value of 0 for **Y**.

Custom

You can adjust the color tones while checking the colors in the adjustment area.
To adjust the color tones, either enter values directly or click the up/down arrows. When you enter values, set values in the range of -100 to 100 for **X**, and -50 to 50 for **Y**.
You can also adjust the color tones by clicking or dragging the adjustment area with the mouse.
If you select another color tone and then select **Custom** again, the values that were preset in **Custom** are restored.

Important

- **Tone** and **X**, **Y** (Monochromatic adjustment value) are displayed when **Black and White Photo Print** check box is selected for **Quality & Media**.

6. If necessary, adjust monochromatic colors manually

To adjust the color tones, either enter values directly to **X** or **Y** (Monochromatic adjustment value) or click the up/down arrows.
You can also adjust the color tones by clicking or dragging the adjustment area with the mouse.

7. Complete the setup

Click **Print**.

When you execute print, the color document is converted to grayscale data with adjusted tones. It allows you to print the color document in monochrome.

Important

- If you select **ColorSync** for **Color Matching**, then **Tone**, **X**, and **Y** appear grayed out and are unavailable.

Related Topics

- Printing a Color Document in Monochrome
- Adjusting Brightness
- Adjusting Contrast

Specifying Color Correction

You can specify the color correction method suited to the type of document to be printed.
Normally, when data is printed, the printer driver automatically adjusts the colors.

When you want to print by using the color space of the image data effectively or by specifying a printing ICC profile from your application software, select **ColorSync**. When you want to print by having the printer driver correct the colors, select **Canon Color Matching**.

The procedure for specifying color correction is as follows:

1. Select **Color Matching** from the pop-up menu of the Print Dialog

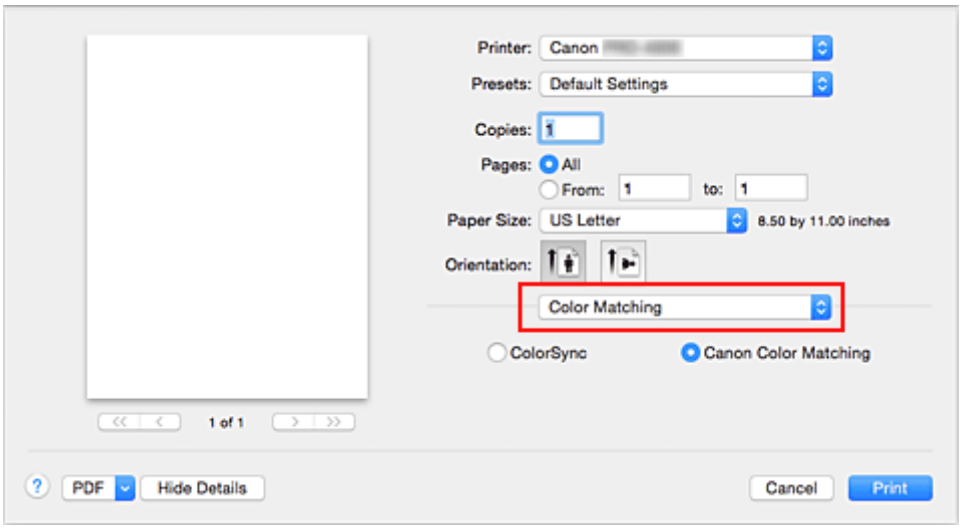

2. Select color correction

   Select the item below that matches your purpose.

   ColorSync

   Perform color correction using ColorSync.

   Canon Color Matching

   The driver will perform necessary adjustments during printing.
   For information about driver matching, see "Adjusting Colors with the Printer Driver."

3. Complete the setup

   Click **Print**.
   When you execute print, the document data is printed with the specified color correction.

Important

- Depending on the application software, when a printing ICC profile is specified from that application software, **Canon Color Matching** cannot be selected because **ColorSync** is selected automatically.
- The **Quality & Media** setting is necessary even when **ColorSync** or **Canon Color Matching** is selected.

Related Topics

- Optimal Photo Printing of Image Data
- Adjusting Colors with the Printer Driver
- Printing with ICC Profiles (Specifying an ICC Profile from the Application Software)
- Printing with ICC Profiles (Specifying an ICC Profile from the Printer Driver)
- Interpreting the ICC Profile

Optimal Photo Printing of Image Data

When people print images taken with digital cameras, they sometimes feel that the printed color tones differ from those of actual image or those displayed on the monitor.
To get the print results as close as possible to the desired color tones, you must select a printing method that is best suited to the application software used or to your purpose.

Color Management

Devices such as digital cameras, scanners, monitors, and printers handle color differently. Color management (color matching) is a method that manages device-dependent "colors" as a common color space.

For Mac OS, a color management system called "ColorSync" is built into the operating system.
sRGB is one of the common color spaces that is frequently used.

ICC profiles convert device-dependent "colors" into a common color space. By using an ICC profile and carrying out color management, you can draw out the color space of the image data within the color reproduction area that the printer can express.

Note

- Normally, image files are saved in JPEG format. Some digital cameras allow you to save images in a format called RAW. RAW data refers to an image saving format that requires a computer to develop the image. You can embed an input ICC profile tag into a RAW file by using special application software.

Selecting a Printing Method Suited to the Image Data

The recommended printing method depends on the color space of the image data or the application software to be used.

There are two typical printing methods.
Check the color space of the image data and the application software to be used, and then select the printing method suited to your purpose.

Adjusting Colors with the Printer Driver

Describes the procedure for printing by using the color correction function of the printer driver.
Select this function when you want to print impressions that are close to those displayed on the monitor, for example, if you corrected the colors while checking the print image on the monitor.

Printing with ICC Profiles (Specifying an ICC Profile from the Application Software)

Describes the procedure for printing by using the color space of the image data effectively.
You can print with a common color space by setting up the application software and the printer driver so that the color management matches the input ICC profile of the image data.
The method for setting up the printer driver differs depending on the application software to be used.

Related Topic

- Interpreting the ICC Profile

Adjusting Colors with the Printer Driver

To use driver matching when printing, turn on the printer driver's color correction function. Driver matching accurately applies the characteristics of data displayed on the monitor and allows you to obtain print results of impressions that are close to those displayed on the monitor.

Important

- When printing using driver matching, Canon recommends that you set the monitor and the environment light as follows:
  - Monitor
    Color temperature: D50 (5000K)
    Brightness: 100 to 120cd/m2
    Gamma: 2.2
  - Environment light
    Fluorescent light for D50 color evaluation (color temperature 5000K, high color rendering properties)
    Brightness when looking at printed materials: 500 lx ± 125 lx

Note

- When printing from an application software that allows you to identify and specify ICC profiles, use an ICC profile for printing with that application software and select setting items that manage colors.

The procedure for adjusting colors with the printer driver is as follows:

1. Select **Color Matching** from the pop-up menu of the Print Dialog

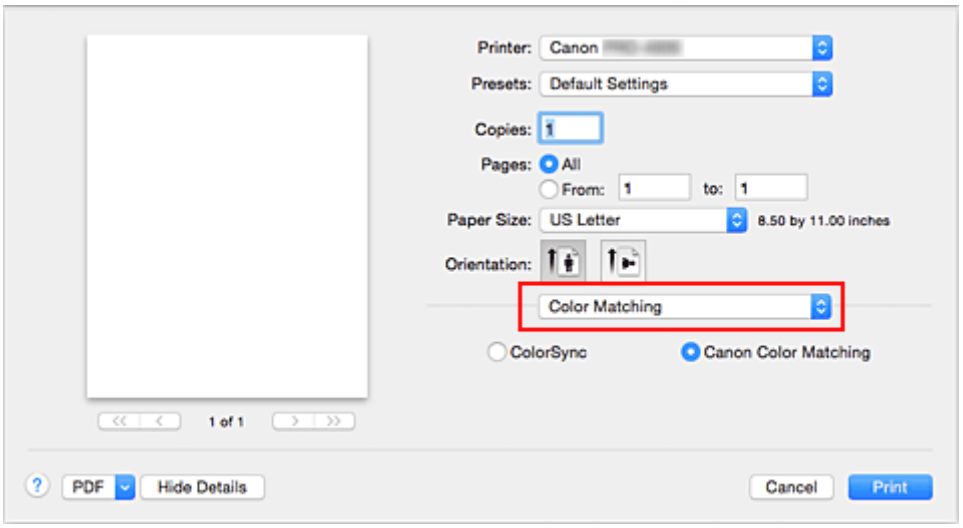

2. Select color correction

   Select **Canon Color Matching**.

3. Select **Quality & Media** from the pop-up menu

4. Select the rendering intent

Select the coloring adjustment method in **Rendering Intent**.

Perceptual (Photo)

Effectively print the color space that can be reproduced on the printer. Further, as the data characteristics displayed on the monitor shall be correctly reflected, select this when you want to print an impression close to the monitor display.

Saturation (Poster)

Compares with the **Perceptual (Photo)**, and reproduces a fresher image.

No Color Correction

The color is not corrected by the printer driver.

5. Set the other items

From the pop-up menu, select **Color Options**. If necessary, adjust the color balance (**Cyan**, **Magenta**, **Yellow**) and adjust **Brightness**, and **Contrast** settings.

6. Complete the setup

Click **Print**.
When you execute print, the printer driver adjusts the colors when printing the data.

Related Topics

- Setting the Print Quality Level (Custom)
- Specifying Color Correction
- Adjusting Color Balance
- Adjusting Brightness
- Adjusting Contrast

Printing with ICC Profiles (Specifying an ICC Profile from the Application Software)

When you print from Adobe Photoshop, Canon Digital Photo Professional, or any application software that can identify input ICC profiles and allows you to specify such profiles, printer uses the color management system (ColorSync) built-into Mac OS when printing. The printer prints the editing and touch-up results of the application software and effectively uses the color space of the input ICC profile specified in the image data.

To use this printing method, use your application software to select color management items and specify an input ICC profile and a printing ICC profile in the image data.
Even if you print using a printing ICC profile that you created yourself or one for special Canon paper, be sure to select color management items from your application software.
For instructions, refer to the manual of the application software you are using.

1. Select **Color Matching** from the pop-up menu of the Print Dialog

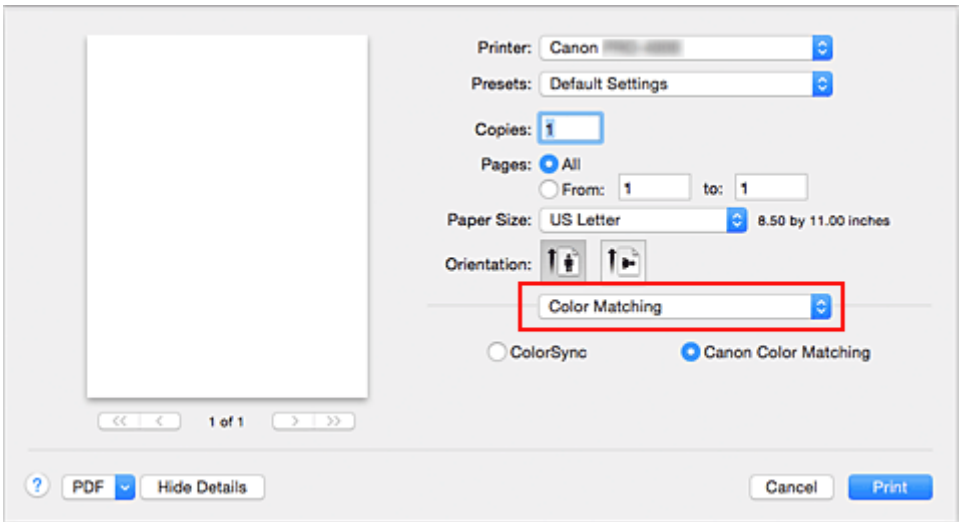

2. Select color correction

   Select **ColorSync**.
   You can leave **Profile** set to **Automatic**.

   Important

   - Depending on the application software you use, you may not be able to select setting items other than **ColorSync**.
   - If you choose a **Profile** setting other than **Automatic** or "Printing Paper ICC Profile", the printer will not be able to print with the correct colors.

3. Complete the setup

   Click **Print**.
   When you execute print, the printer uses the color space of the image data.

Related Topics

- Setting the Print Quality Level (Custom)

- Specifying Color Correction
- Adjusting Color Balance
- Adjusting Brightness
- Adjusting Contrast

Printing with ICC Profiles (Specifying an ICC Profile from the Printer Driver)

Print from an application software that cannot identify or specify input ICC profiles by using the color space of the input ICC profile (sRGB) found in the data.

1. Select **Color Matching** from the pop-up menu of the Print Dialog

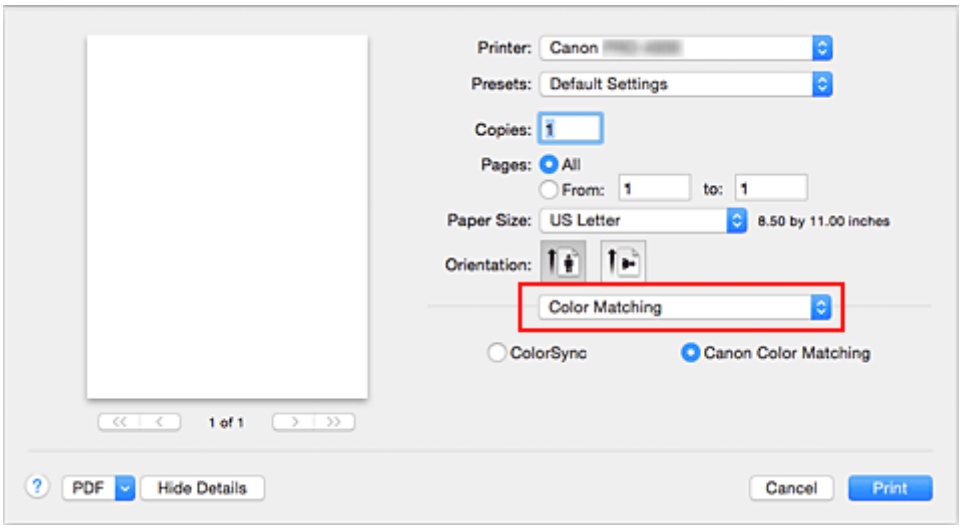

2. Select color correction

   Select **ColorSync**.
   You can leave **Profile** set to **Automatic**.

   Important

   - If you choose a **Profile** setting other than **Automatic** or "Printing Paper ICC Profile", the printer will not be able to print with the correct colors.

3. Complete the setup

   Click **Print**.
   When you execute print, the printer uses the color space of the image data.

Important

- You cannot specify an input ICC profile from the printer driver.

Related Topics

- Setting the Print Quality Level (Custom)
- Specifying Color Correction
- Adjusting Color Balance
- Adjusting Brightness
- Adjusting Contrast

Interpreting the ICC Profile

When specifying an ICC profile for this printer, specify an ICC profile according to the print output media.

The ICC profiles installed for this printer appear as follows.

Canon XXXXX Photo Paper Plus Glossy II
(1) (2)

- (1) : Printer model
- (2) : Media type
  For the names of compatible paper, check the information for the paper you want to use from "Paper Information List."

Adjusting Brightness

You can brighten or darken the colors of the overall image data during printing.
The following sample shows the case when light colors are darkened when the image data is printed.

No adjustment

Darken light colors

The procedure for adjusting brightness is as follows:

1. Select **Color Options** from the pop-up menu of the Print Dialog

2. Adjust brightness

   Moving the **Brightness** slider to the right brightens the colors, and moving the slider to the left darkens the colors.
   You can also directly enter a value linked to the slider. Enter a value in the range from -50 to 50. The current settings are displayed in the settings preview on the left side of the printer driver.

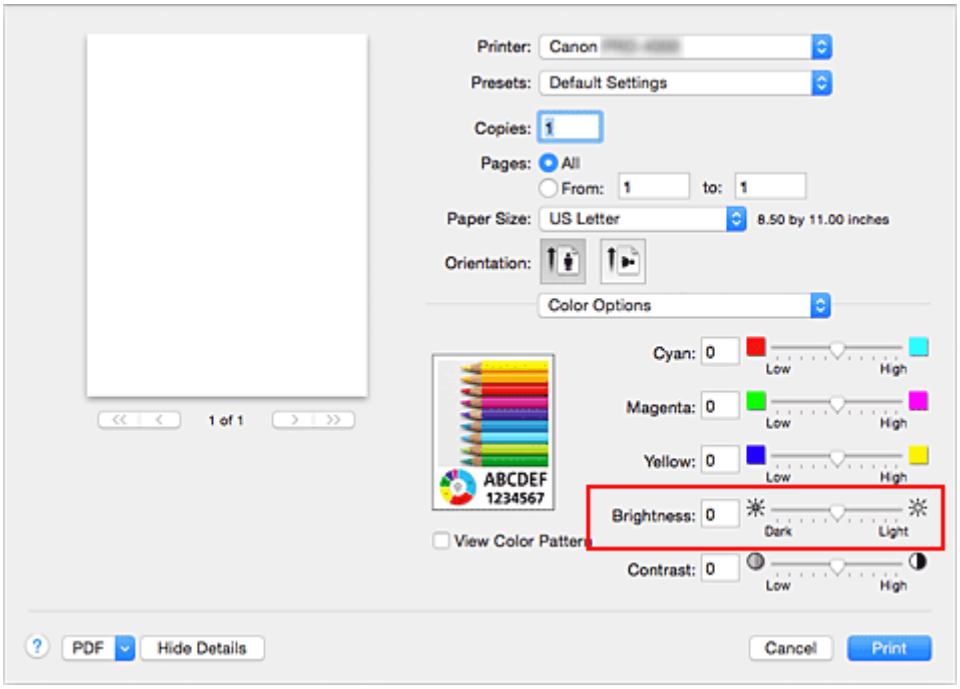

3. Complete the setup

   Click **Print**.
   When you execute print, the data is printed at the adjusted brightness.

Important

- If you select **ColorSync** for **Color Matching**, then the **Brightness** appears grayed out and is unavailable.

Related Topics

- Setting the Print Quality Level (Custom)
- Specifying Color Correction
- Adjusting Color Balance
- Adjusting Contrast

Adjusting Contrast

You can adjust the image contrast during printing.
To make the differences between the light and dark portions of images greater and more distinct, increase the contrast. On the other hand, to make the differences between the light and dark portions of images smaller and less distinct, reduce the contrast.

No adjustment

Adjust the contrast

The procedure for adjusting contrast is as follows:

1. Select **Color Options** from the pop-up menu of the Print Dialog

2. Adjust the contrast

   Moving the **Contrast** slider to the right increases the contrast, and moving the slider to the left decreases the contrast.
   You can also directly enter a value linked to the slider. Enter a value in the range from -50 to 50. The current settings are displayed in the settings preview on the left side of the printer driver.

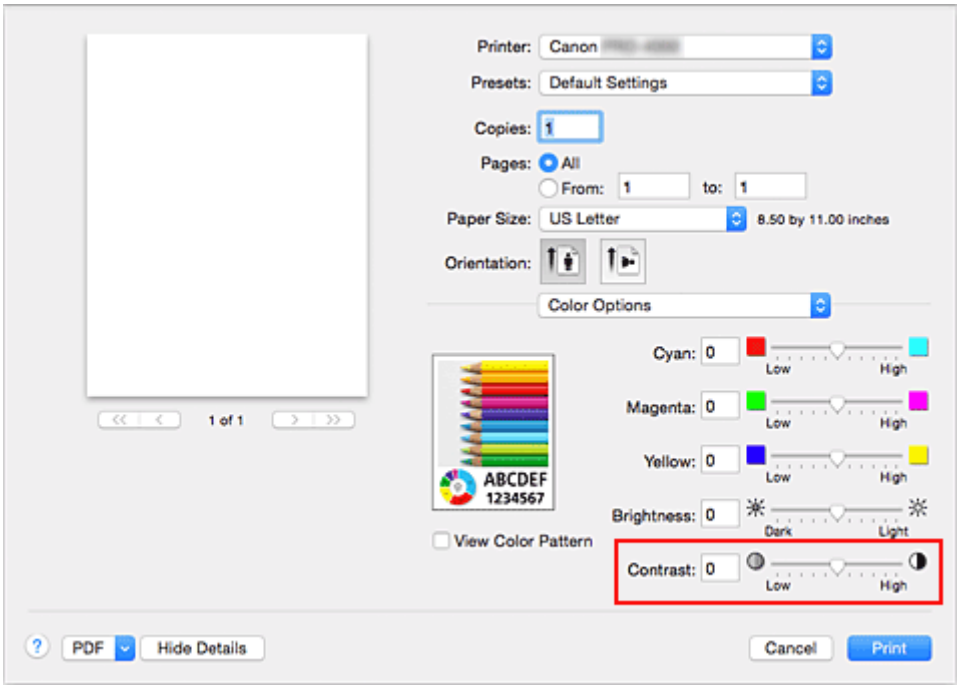

3. Complete the setup

   Click **Print**.
   When you execute print, the image is printed with the adjusted contrast.

Important

- If you select **ColorSync** for **Color Matching**, then the **Contrast** appears grayed out and is unavailable.

Related Topics

- Setting the Print Quality Level (Custom)
- Specifying Color Correction
- Adjusting Color Balance
- Adjusting Brightness

Scaled Printing

The procedure for printing a document with pages enlarged or reduced is as follows:

Printing by Enlarging/Reducing Document to Specified Ratio

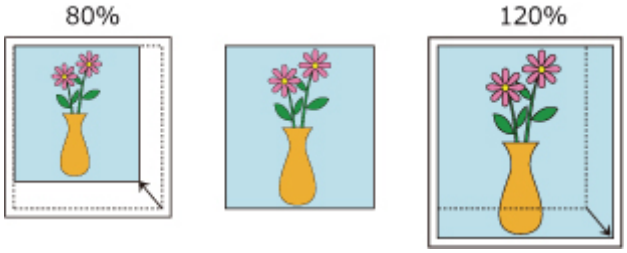

1. Select the printer

   In the Page Setup Dialog, select your model name from the **Format For** list.

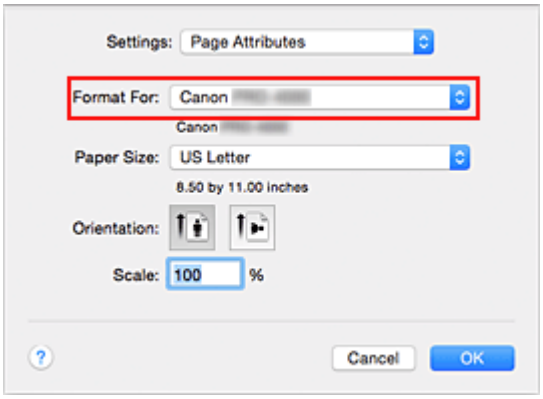

2. Set scaled printing

   Specify the scaling factor in the **Scale** box, and click **OK**.

   Note

   - Depending on the **Scale** value that you set, an error message may be displayed.

3. Complete the setup

   On the Print Dialog, click **Print**.
   When you execute print, the document will be printed with the specified scale.

Important

- When the application software which you used to create the original has the scaled printing function, configure the settings on your application software. You do not need to configure the same setting in the Page Setup dialog.

Printing by Enlarging/Reducing Document to Match Roll Paper Width

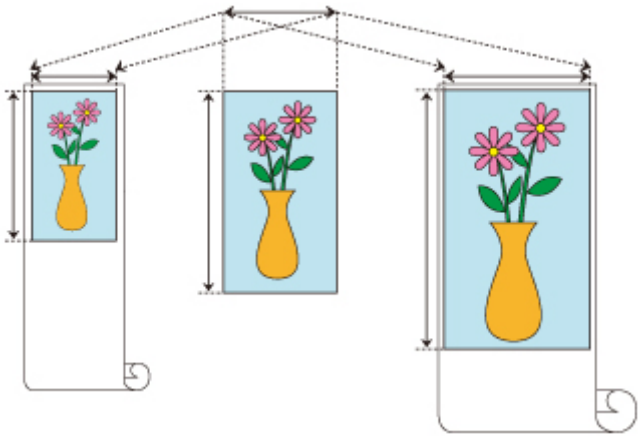

1. Select **Page Processing** from the pop-up menu of the Print Dialog

2. Setting Enlarged/Reduced Printing

   For **Fit Roll Paper Width**, select **On (Bordered)** or **On (Borderless)**.

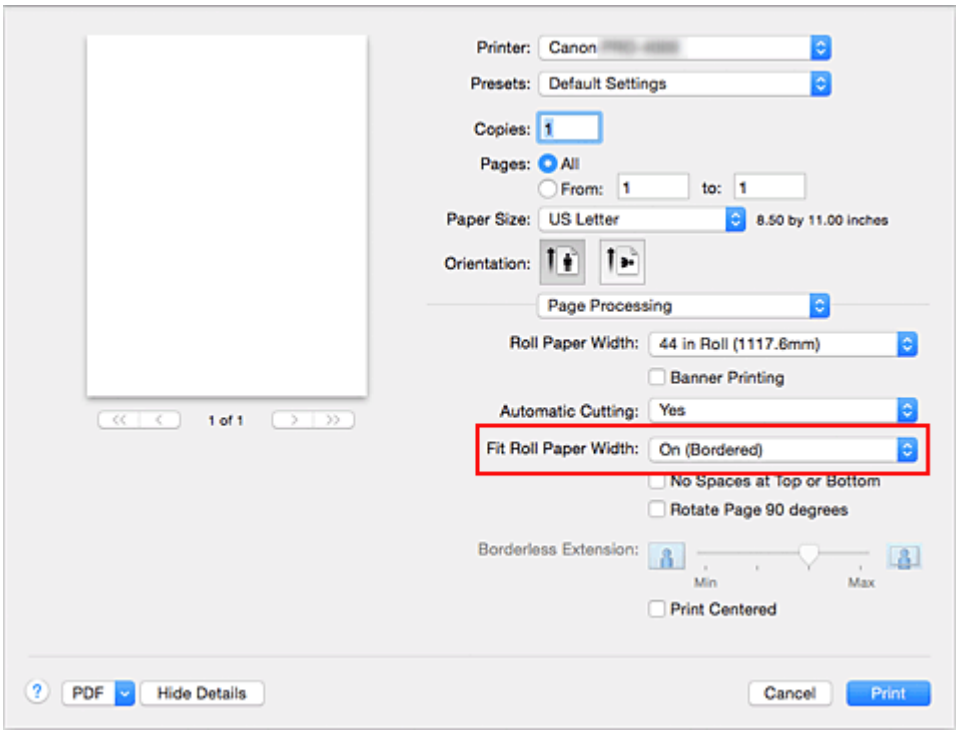

Note

- Depending on the **Paper Size** settings, the settings you can choose will differ.
- When selecting "XXX (oversize)" from **Paper Size** , **On (Borderless)** cannot be selected.

3. Complete the setup

   Click **Print**.
   When you print, the document is expanded or reduced to match the roll paper width and then printed.

Printing to Oversized Paper Sizes

When printing a created document so that it fills the entire paper width, select a paper size from the "XXX (oversize)" (sizes resulting from adding margins necessary for printer operation to the document sizes) so that all areas of the document are printed at their actual size.

A printout that has the same area as the document can be obtained by trimming the outer margins after printing.

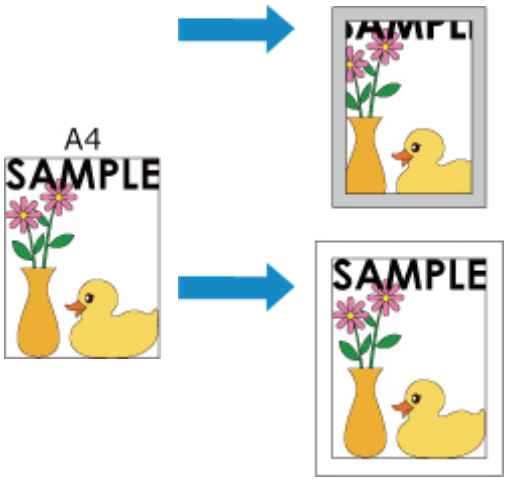

The procedure for printing with oversize is as follows:

1. Select oversized paper size

   In the Print dialog, select "XXX (oversize)" for **Paper Size**.

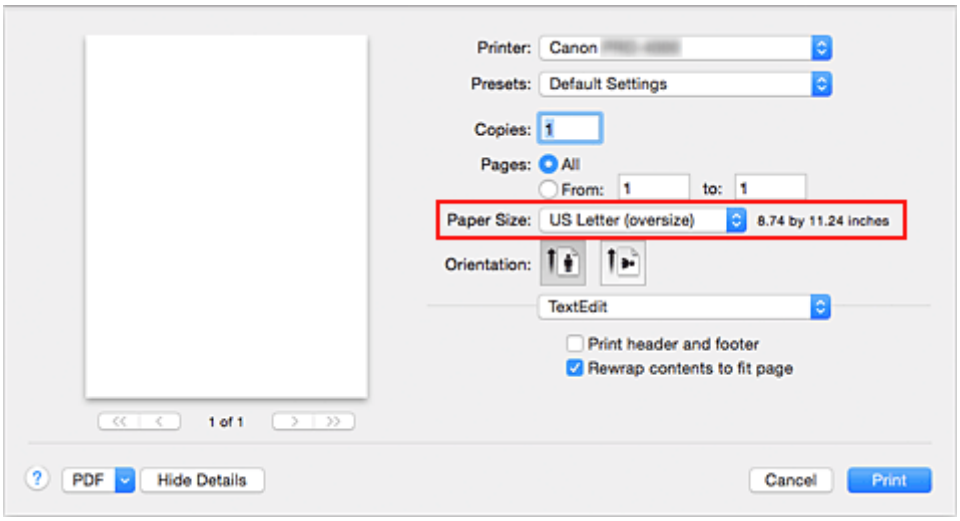

2. Select the paper source

   For **Paper Source**, select the paper source that matches your purpose from **Roll Paper (Auto)**, **Roll 1**, and **Roll 2**.

Important

- The paper feed method will differ according to the paper or lower level (roll paper 2) settings, or roll unit option settings.

3. Select **Page Processing** from the pop-up menu

4. Select roll paper width

   Set **Roll Paper Width** to the width of the roll paper loaded in the printer.

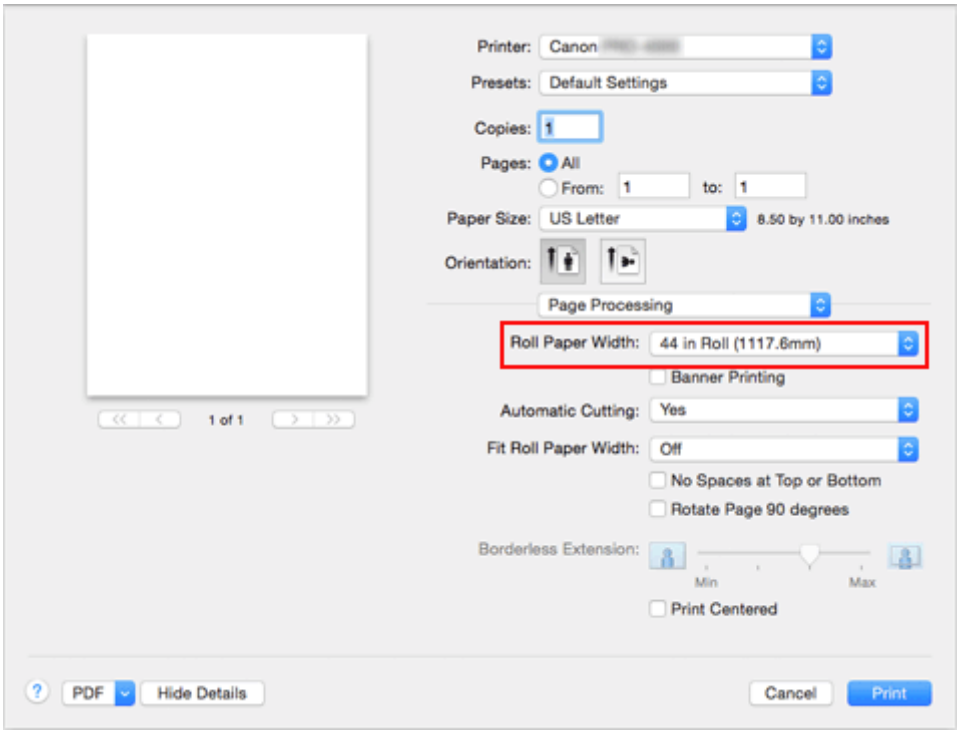

5. Complete the setup

   Click **Print**.
   When you print, the document is printed so that it fills the paper width.

Important

- When printing to oversized paper sizes, use paper that has the following necessary margins added to the document size.
  - Cut sheet: 6 mm or more added to width and 23 mm or more added to height of document size
  - Roll paper: 6 mm or more added to width and 6 mm or more added to height of document size

Note

- An oversized paper size cannot be used for the largest paper size that can be loaded in the printer.

Setting Paper Dimensions (Custom Size)

You can specify the height and width of paper when its size cannot be selected from the **Paper Size** menu. Such a paper size is called "custom size."

The procedure for specifying a custom size is as follows:

1. Creating a new custom paper size

   In the Print Dialog, select **Manage Custom Sizes...** from **Paper Size**.
   In the displayed dialog, click **+**.

   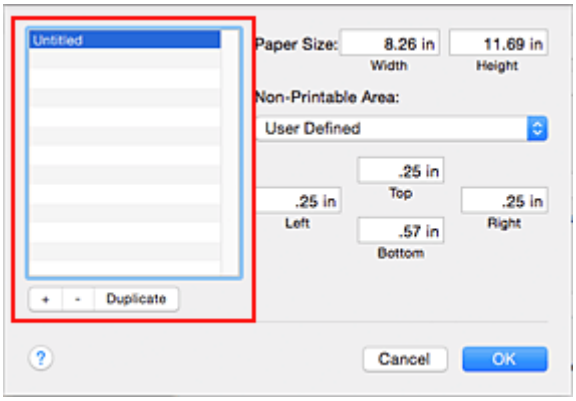

   Untitled will be added to the list.

2. Setting details about the custom paper size

   Double-click **Untitled**, enter the name of the paper size you want to register, and specify the **Width** and **Height** of the paper for **Paper Size**.
   Select **User Defined** or your model for **Non-Printable Area**, and enter the margins.

3. Registering the custom paper size

   Click **OK**.
   The custom size is registered.

Important

- If the application software that created the document has a function for specifying height and width values, use the application software to set the values. If the application software does not have such a function or if the document does not print correctly, perform the above procedure from the printer driver to set the values.

Note

- To duplicate the registered paper size, select the paper size that you want to duplicate from the **Custom Paper Sizes** list, and click **Duplicate**.
- To delete a registered paper size, select the paper size that you want to delete from the **Custom Paper Sizes** list, and click **-**.
- If the paper settings in the printer driver differ from the paper information registered on the printer, an error message may appear on the printer's operation panel. You can still print but you may not be able to obtain correct print results.

Print Area

A margin required by the printer is added with respect to the size of paper loaded in the printer. Except in borderless printing, the actual printing area corresponds to the paper size minus the space for this margin.

Note

- Printable Area: The area that can be printed.
- For borderless printing with roll paper, the margin is 0 in (0 mm).

  However, depending on the paper size, minor margins may be available.

  Prints without Edges Based on the Scenarios
- Recommended Print Area: We recommend printing within this area.
- To match the document size with the actual printing area, print on oversize paper with the required margin added.

  Printing to Oversized Paper Sizes

	Margins of Printable Area			Margins of Recommended Print Area		
	Top Edge	Bottom Edge	Sides	Top Edge	Bottom Edge	Sides
Sheets	0.2 in (3 mm)	0.8 in (20 mm)	0.2 in (3 mm)	0.8 in (20 mm)	0.8 in (20 mm)	0.2 in (3 mm)
Rolls	0.2 in (3 mm)	0.2 in (3 mm)	0.2 in (3 mm)	0.8 in (20 mm)	0.2 in (3 mm)	0.2 in (3 mm)

Sheets

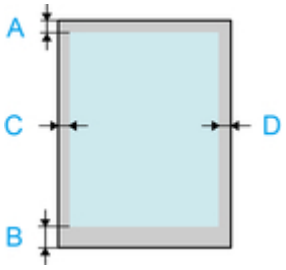

A. Top Edge

B. Bottom Edge

C. Left Edge

D. Right Edge

- Printable Area:
  A margin of 0.2 in (3 mm) on top, 0.8 in (20 mm) on bottom, and 0.2 in (3 mm) on left and right sides is required.
- Recommended Print Area:
  A margin of 0.8 in (20 mm) on top, 0.8 in (20 mm) on bottom, and 0.2 in (3 mm) on left and right sides is required.

Rolls

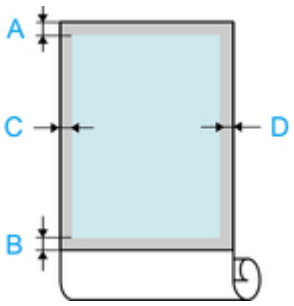

A. Top Edge

B. Bottom Edge

C. Left Edge

D. Right Edge

- Printable Area:
  A margin of 0.2 in (3 mm) on top and bottom and 0.2 in (3 mm) on left and right sides is required. For borderless printing, the margins on top, bottom, left, and right are 0 in (0 mm). For paper that supports borderless printing, see "Paper Information List."
- Recommended Print Area:
  A margin of 0.8 in (20 mm) on top, 0.2 in (3 mm) on bottom, and 0.2 in (3 mm) on left and right sides is required.

Prints without Edges Based on the Scenarios

- Printing without Margins to Match Roll Paper Width
- Printing Full-Size without Margins

Printing without Margins to Match Roll Paper Width

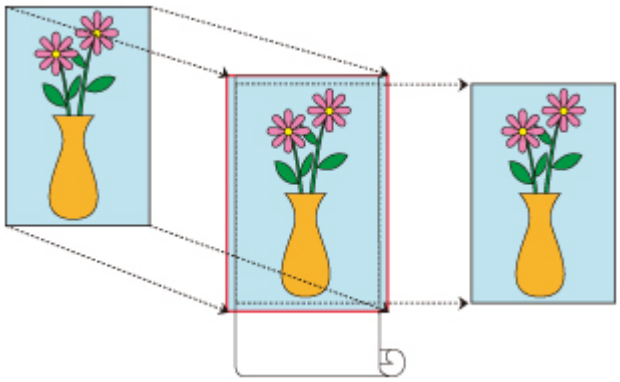

Procedure for printing borderless (without white margins around the edges) by enlarging/reducing documents to match roll paper width.

1. Select the paper size for whole-surface borderless printing

   In the printer dialogue box, under **Paper Size**, Select "XXX (borderless)."

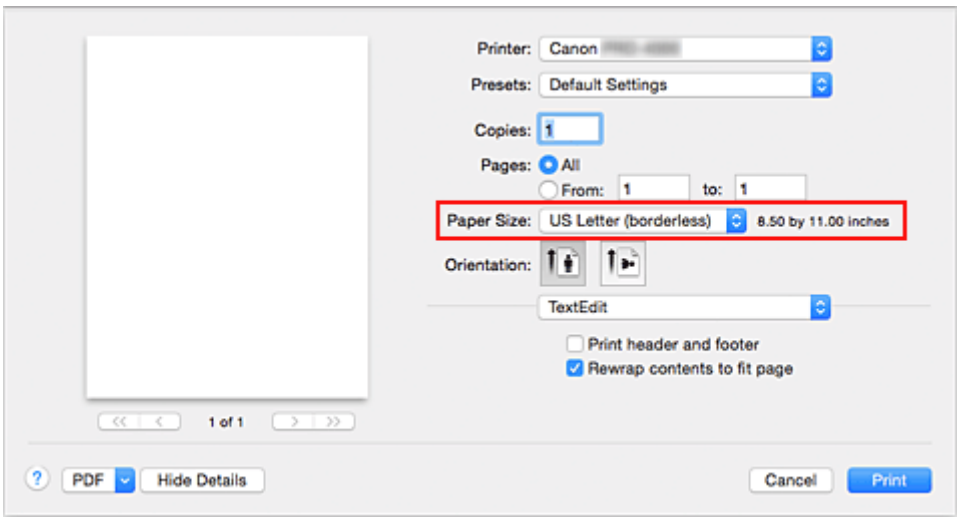

2. From the pop-up menu, select **Page Processing**

3. Select roll paper width

   For paper roll width, enter the same value set in the printer under **Roll Paper Width**.

4. Select a method for printing on roll paper

   In **Fit Roll Paper Width**, select **On (Borderless)**.

5. Determine by how much you want the image to exceed the size of the paper

   Adjust **Borderless Extension** as needed.
   Dragging the slide bar to the right will increase overflow, while dragging it to the left will reduce it.
   The second position from the right is recommended for most cases.

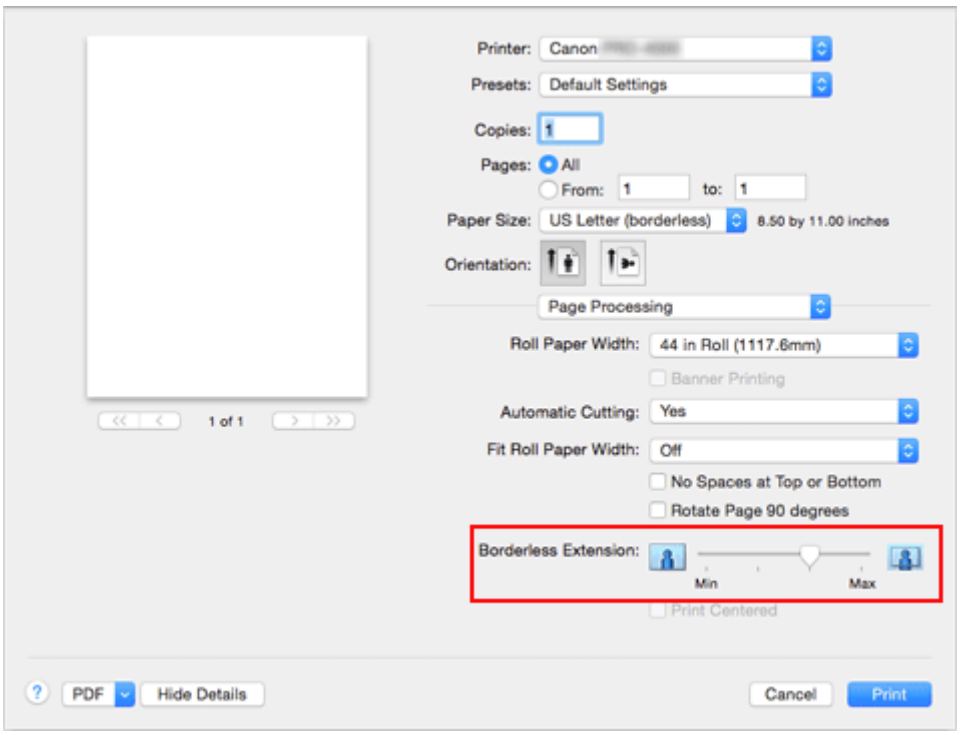

Important

- If the **Borderless Extension** slide bar is set to the far right position, the back of the paper may come out stained.

6. Complete setting process

   Click **Print**.
   If you print now, the document will be printed by filling in the entire surface of the paper.

Important

- The available paper sizes for Borderless Printing are pre-determined. From **Paper Size**, select the paper displayed as "(borderless)."
- If you want to print borderless using a custom paper size, create a custom paper size by choosing **Paper Size**, **Manage Custom Sizes...**, and setting all **Non-Printable Area** values to 0 mm. Next, choose **Page Processing**, **Fit Roll Paper Width** and select **On (Borderless)**.
- If you try to set borderless printing, in **Page Processing**, **Banner Printing** and **Print Centered** will be displayed in gray and you will not be able to configure them.
- Depending on paper size, the length/width ratio of the paper may be different from that of the image, making it impossible for the whole image to fit on the paper.
  When this happens, crop the image with the application software to match paper size.
- When printing borderless, printing may stop abruptly and the paper will be cut causing a slight color unevenness on the edges of the paper. If you require particularly high quality, under **Page Processing**, **Automatic Cutting**, select **None**. When you do so, the document will be printed without the left and right margins. After the printed material has exited the printer and has been cut, cut the upper and lower edges with a pair of scissors.
- When printing borderless on paper with low ink-fixing properties, depending on frequency of use, the cutter unit may come into contact with the paper surface scratching it and causing the paper to be unevenly cut.

You may be able to improve the situation by choosing **Paper Detailed Settings** and set **Dry Time (Between Pages)** to a higher value.

- If the following paper is selected for **Roll Paper Width**, margins may be formed on the left and right of the document even when borderless printing is set.
  - **A2/A3 Roll (420.0mm)**
  - **16 in Roll (406.4mm)**
  - **A3+ Roll (329.0mm)**
  - **300mm Roll (300.0mm)**
  - **A3/A4 Roll (297.0mm)**
  - **B4 Roll (257.0mm)**
  - **8 in Roll (203.2mm)**

  Also, stains may appear on the back of the paper.

Note

- When using applications like Microsoft Word which allow you to set margins, set margins to 0 mm.

Printing Full-Size without Margins

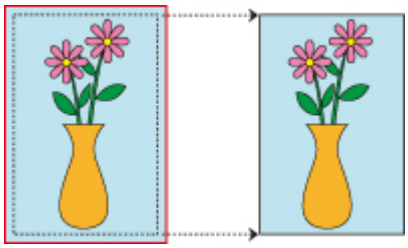

Procedure for printing borderless (without white margins around the edges) images in the same size as the original document without enlarging/reducing them Recommended if you prize quality.

1. Select the paper size for whole-surface borderless printing

   In the printer dialogue box, under **Paper Size**, select "XXX (borderless)."

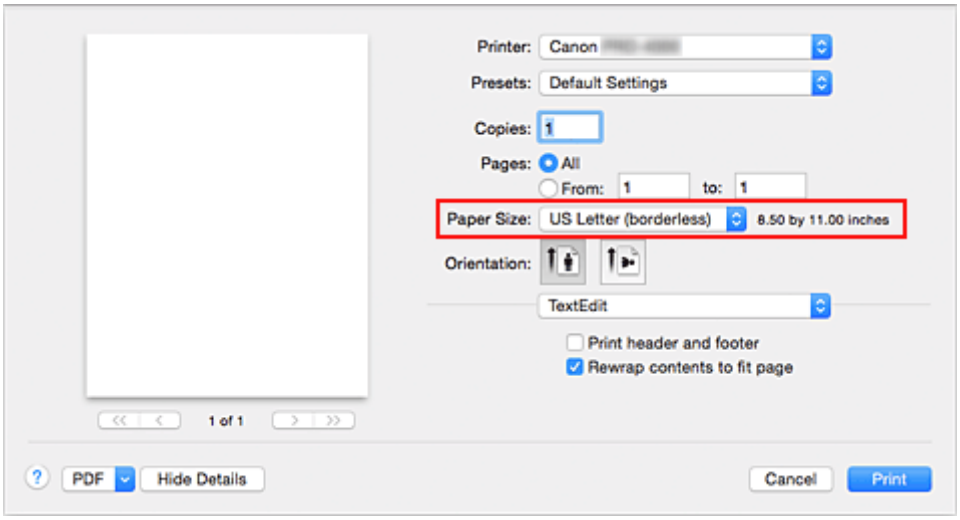

2. From the pop-up menu, select **Page Processing**

3. Select roll paper width

   For paper roll width, enter the same value set in the printer under **Roll Paper Width**.

4. Select a method for printing on roll paper

   For **Fit Roll Paper Width**, select **Off**.

   Important

   - Depending on **Paper Size**, when setting **Fit Roll Paper Width** on **Off**, it may not be possible to print borderless.

5. Determine by how much you want the image to exceed the size of the paper

   Adjust **Borderless Extension** as needed.
   Dragging the slide bar to the right will increase overflow, while dragging it to the left will reduce it.
   The second position from the right is recommended for most cases.

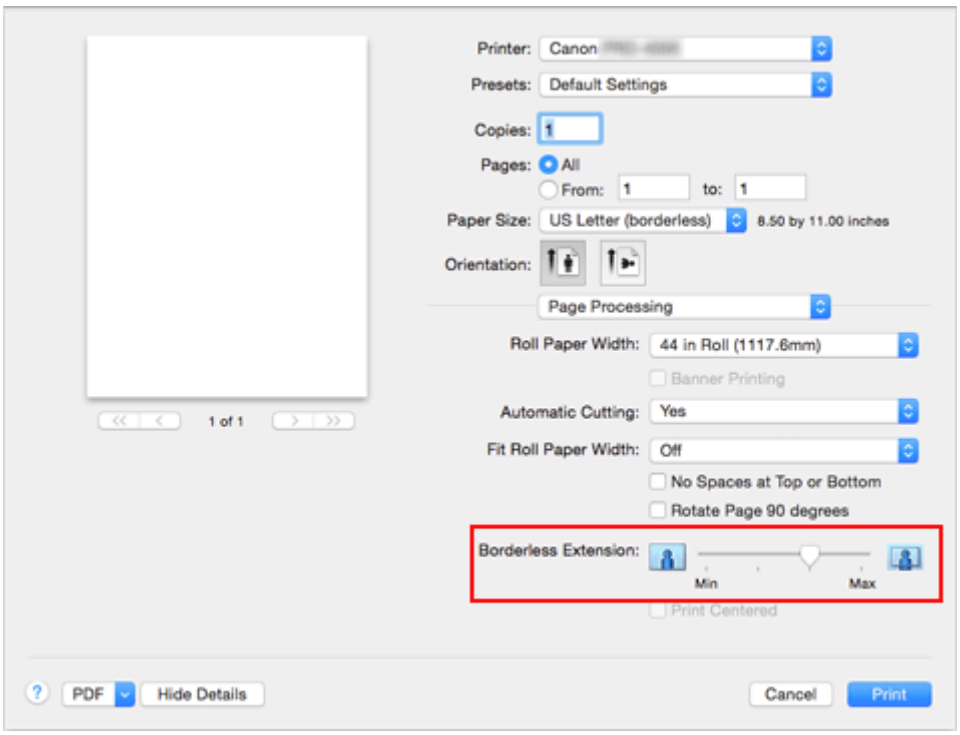

Important

- If the **Borderless Extension** slide bar is set to the far right position, the back of the paper may come out stained.

6. Complete setting process

   Click **Print**.
   If you print now, the document will be printed by filling in the entire surface of the paper.

Important

- The available paper sizes for Borderless Printing are pre-determined. From **Paper Size**, select the paper displayed as "(borderless)."
- If you want to print borderless using a custom paper size, create a custom paper size by choosing **Paper Size**, **Manage Custom Sizes...**, and setting all **Non-Printable Area** values to 0 mm. Next, choose **Page Processing**, **Fit Roll Paper Width** and select **On (Borderless)**.
- If you try to set borderless printing, in **Page Processing**, **Banner Printing** and **Print Centered** will be displayed in gray and you will not be able to configure them.
- Depending on paper size, the length/width ratio of the paper may be different from that of the image, making it impossible for the whole image to fit on the paper.
  When this happens, crop the image with the application software to match paper size.
- When printing borderless, printing may stop abruptly and the paper will be cut causing a slight color unevenness on the edges of the paper. If you require particularly high quality, under **Page Processing**, **Automatic Cutting**, select **None**. When you do so, the document will be printed without the left and right margins. After the printed material has exited the printer and has been cut, cut the upper and lower edges with a pair of scissors.
- When printing borderless on paper with low ink-fixing properties, depending on frequency of use, the cutter unit may come into contact with the paper surface scratching it and causing the paper to be unevenly cut.

You may be able to improve the situation by choosing **Paper Detailed Settings** and set **Dry Time (Between Pages)** to a higher value.

- If the following paper is selected for **Roll Paper Width**, margins may be formed on the left and right of the document even when borderless printing is set.
  - **A2/A3 Roll (420.0mm)**
  - **16 in Roll (406.4mm)**
  - **A3+ Roll (329.0mm)**
  - **300mm Roll (300.0mm)**
  - **A3/A4 Roll (297.0mm)**
  - **B4 Roll (257.0mm)**
  - **8 in Roll (203.2mm)**

  Also, stains may appear on the back of the paper.

Note

- When using applications like Microsoft Word which allow you to set margins, set margins to 0 mm.

Changing the Clear Coating Settings

When you execute clear coating, the printer applies chroma optimizer (CO) ink onto the printing surface and allows you to adjust the glossiness.

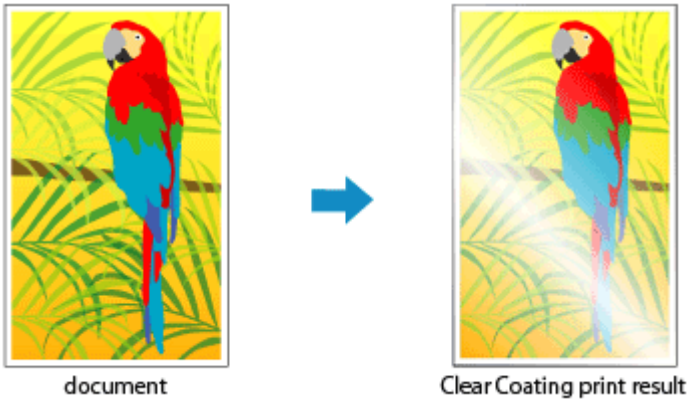

This section explains procedures for changing the clear coating settings.

1. From the Print Dialog, display the pop-up menu, and select **Paper Detailed Settings**

2. Setting the clear coating area

   Select **Auto** or **Overall** under **Clear Coating Area**.

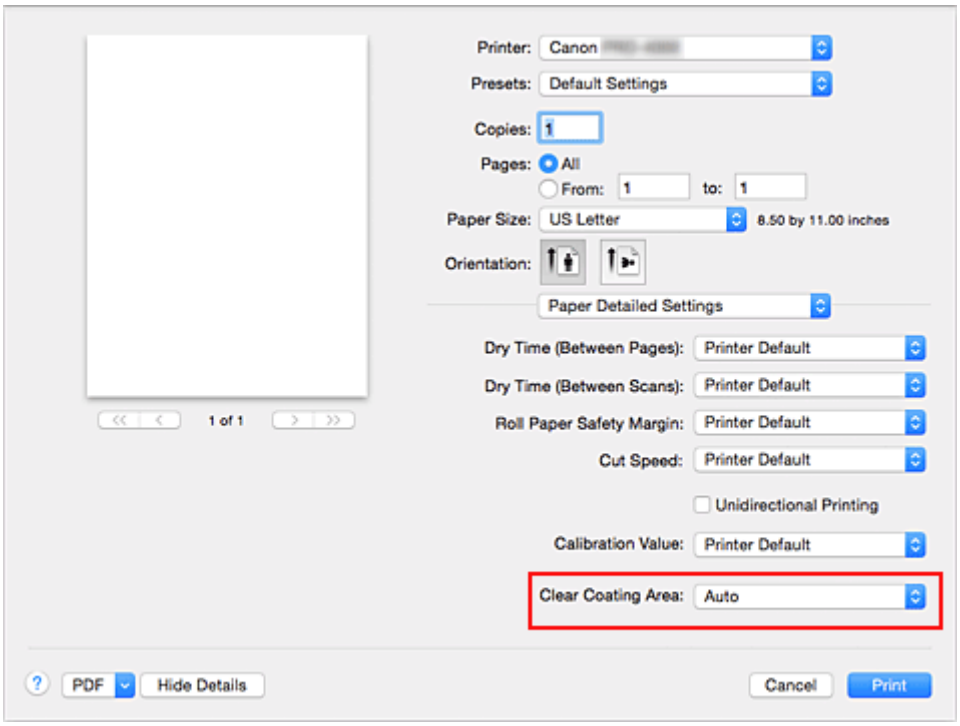

Auto

The printer automatically sets the areas to be clear-coated and whether clear coating is to be executed.
It may be possible to reduce the ink consumption of the chroma optimizer (CO) or to accelerate the print speed.

Overall

The printer clear-coats the entire print area.
If selecting **Auto** produced unsatisfactory clear coating effects, selecting **Overall** may improve the results.

Important

- Depending on the type of paper selected from **Media Type** on **Quality & Media**, you may not be able to select **Overall**.
  For paper for which **Overall** can be used, select the paper you want to use from "Paper Information List" and check the information.
- If **Overall** is selected and the media type is changed to one that cannot use **Overall**, the clear coating area setting is changed to **Auto**.

3. Complete the setup

Click **Print**.
When printing is executed, the clear coating effect that was set is added when the document is printed.

Printing Hanging and Horizontal Banners (Large-Format Printing)

A drapery or banner up to 18.0m can be made by enlarging or reducing original documents made on application software.
However, there are cases in which an 18.0 meter banner cannot be printed because the application software used has limits on the document size that can be set.

The procedure for printing hanging and horizontal banners is as follows:

1. Register custom paper size

   From **Paper Size**, use **Manage Custom Sizes...** to register the paper size that you want to use.

2. Select the paper size

   In the Print dialog, select a registered custom paper size from the **Paper Size** list.

3. Select **Page Processing** from the pop-up menu

4. Select roll paper width

   Set **Roll Paper Width** to the width of the roll paper loaded in the printer.

5. Selecting **On (Bordered)** or **On (Borderless)** for **Fit Roll Paper Width**

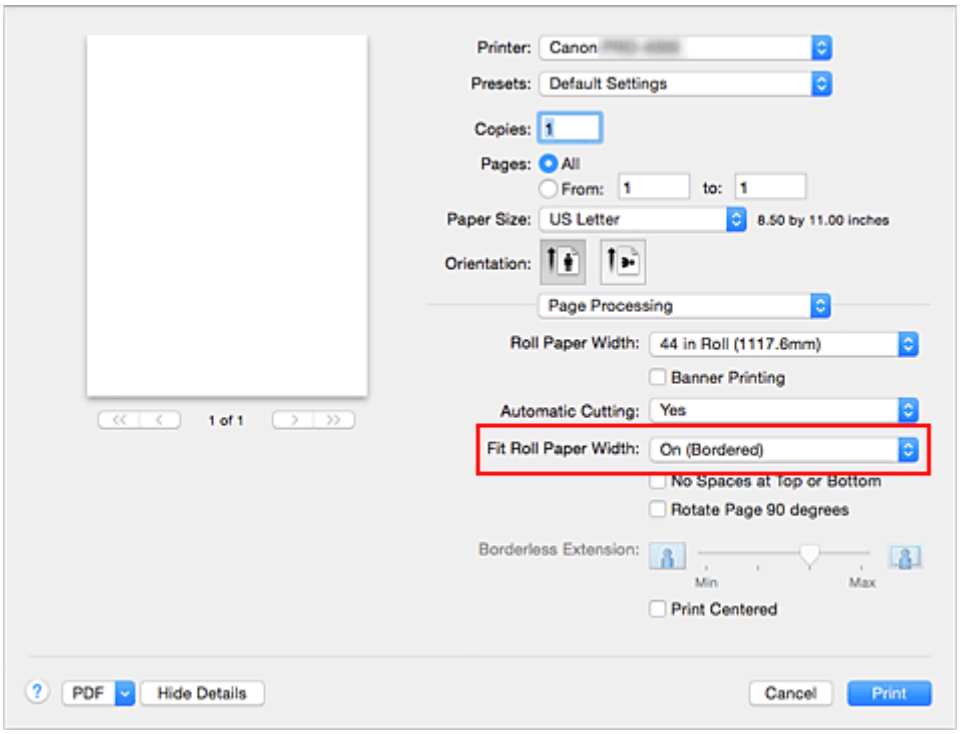

Important

- When using the customer paper size and printing the whole sheet without edges, create a paper size with the **Non-Printable Area** values all set to 0mm in **Manage Custom Sizes...** from **Paper Size**, and select **On (Bordered)** from the **Fit Roll Paper Width** in **Page Processing**.

6. Complete the setup

Click **Print**.

When you print, the hanging or horizontal banner is printed by using the custom paper size.

Printing by Dividing/Joining Documents

- Lining Up and Printing Multiple Documents
- Printing by Connecting Multiple Pages
- Printing Multiple Pages All on One Page

Lining Up and Printing Multiple Documents

You can line up multiple documents that were created separately and print them together on one page.

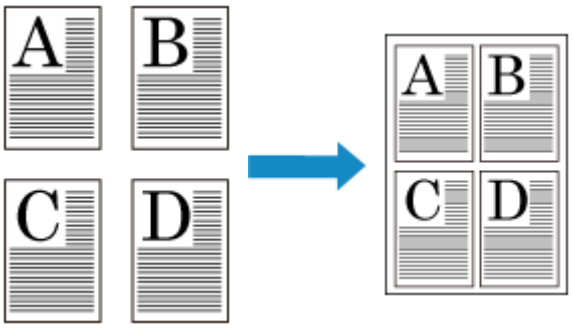

The procedure for lining up and printing multiple documents is as follows:

1. In Print dialog, select Canon imagePROGRAF Free Layout for **PDF**

   Canon imagePROGRAF Free Layout is started.
   Canon imagePROGRAF Free Layout allows you to edit and rearrange images.

2. Execute printing

   From the **File** menu of Canon imagePROGRAF Free Layout, select **Print...** to execute printing.

Printing by Connecting Multiple Pages

You can eliminate the blank spaces between pages in a document that extends over multiple pages and print the document as one continuous document.

The procedure for printing by connecting multiple pages is as follows:

1. Select **Quality & Media** from the pop-up menu of the Print Dialog

2. Select the paper source

   Select **Roll Paper (Auto)**, **Roll 1** or **Roll 2** that matches your purpose for **Paper Source**.

   Important

   - The paper feed method will differ according to the paper or lower level (roll paper 2) settings, or roll unit option settings.

3. Select **Page Processing** from the pop-up menu

4. Setting Banner Printing

   Check the **Banner Printing** check box.

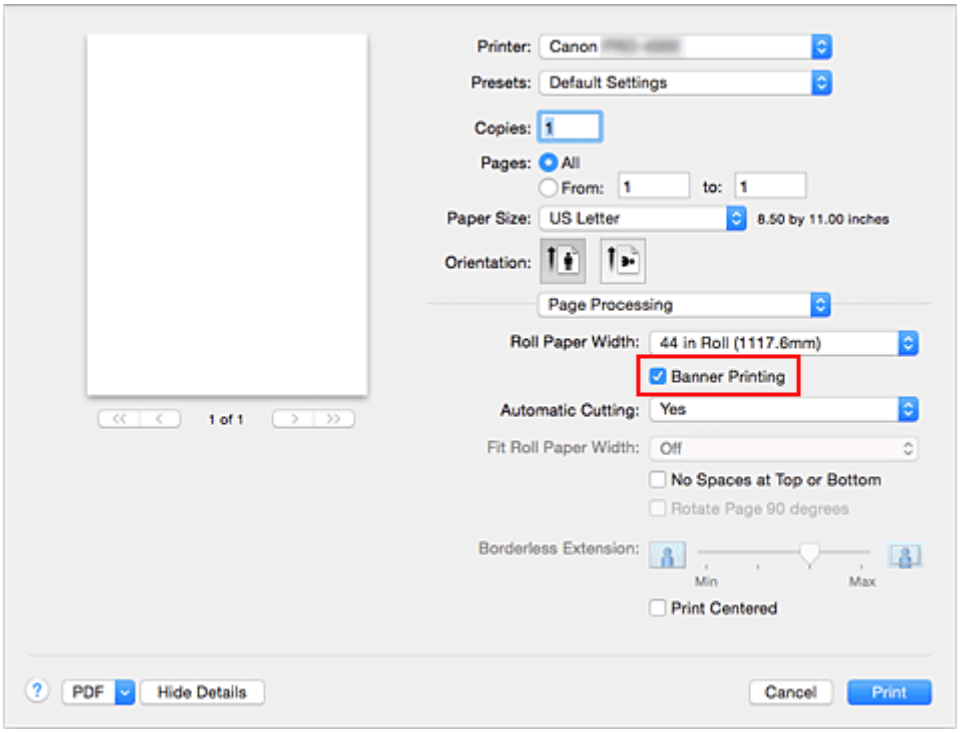

5. Complete the setup

   Click **Print**.
   When you print, the document is printed with the multiple pages connected.

Important

- When "XXX (borderless)" or "XXX (Cut Sheet)" is selected for **Paper Size** in the Print dialog, **Banner Printing** is grayed out and cannot be set.

Printing Multiple Pages All on One Page

The page layout printing function allows you to print more than one page image on a single sheet of paper.

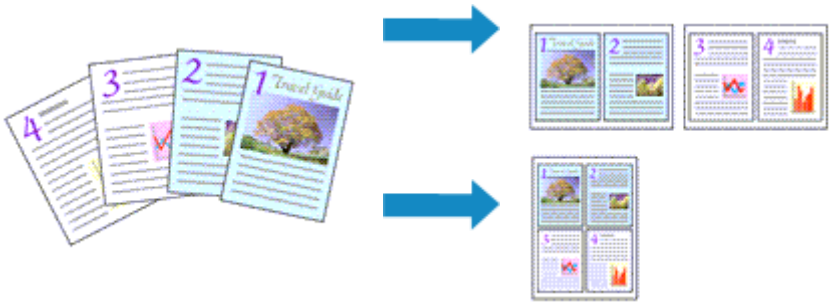

The procedure for performing page layout printing is as follows:

1. Select **Layout** from the pop-up menu in the Print Dialog

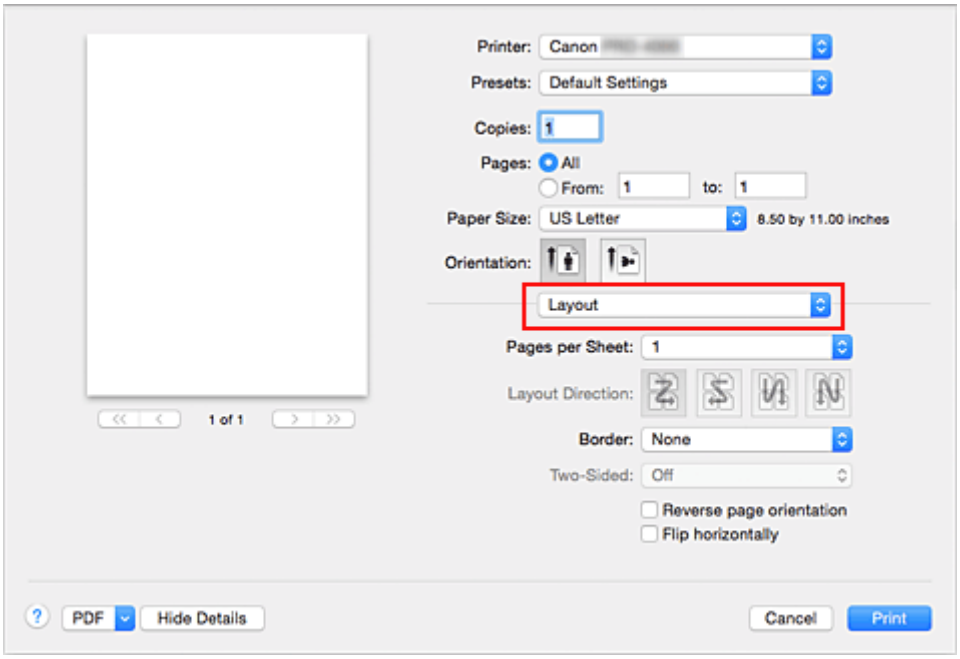

2. Set the number of original you print on one page

   In **Pages per Sheet**, specify the number of page you print on one page.

3. If necessary, set the following items

   Layout Direction

   To change the page placement order, select an icon from the list.

   Border

   To print a page border around each document page, select a type of page border.

   Reverse page orientation

   Select this check box to change the paper orientation.

Flip horizontally

Select this check box to reverse left and right of the document.

4. Complete the setup

Click **Print**.

When you execute print, the specified number of pages will be arranged on each sheet of paper in the specified order.

Printing Document in Center of Paper

When you want to position the source document in the middle of the cut paper and print, or print with even margins on the right and left in relation to the width of the roll paper, use the **Print Centered** function.
The print results when setting with **Print Centered** are as follows. Normally, if **Print Centered** is set when printed as in (A), it will be printed as in (B) for cut paper and (C) for roll paper.

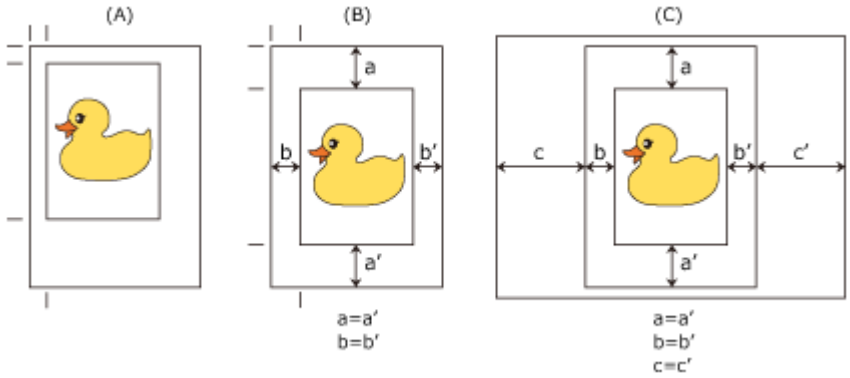

Note

- When setting the magnification using **Scale** in the Page Setup Dialog, a fixed point at the upper left corner of a page is always used as a start point for enlarging or reducing the page. For that reason, when performing reduced printing, the bottom and right margins of the paper will increase. At this time, if you place a checkmark next to **Print Centered**, the top, bottom, left and right margins can all be printed evenly.

The procedure for printing to the center of the paper is as follows:

1. Select **Page Processing** from the pop-up menu of Print Dialog

2. Select the paper size

   From **Paper Size**, select the size of the paper you want to print.

3. Select **Quality & Media** from the pop-up menu

4. Select the media type

   For **Media Type**, select the same paper type loaded in the printer.

5. Select the paper source

   For **Paper Source**, select the setting that matches your purpose.

   ### Important

   - The paper feed method will differ according to the paper or lower level (roll paper 2) settings, or roll unit option settings.

6. Select **Page Processing** from the pop-up menu

7. Selecting Roll Paper Width

   If you selected a roll paper for **Paper Source**, set **Roll Paper Width** to the width of the roll paper loaded in the printer.

8. Print document in the center of paper

   Check the **Print Centered** check box.

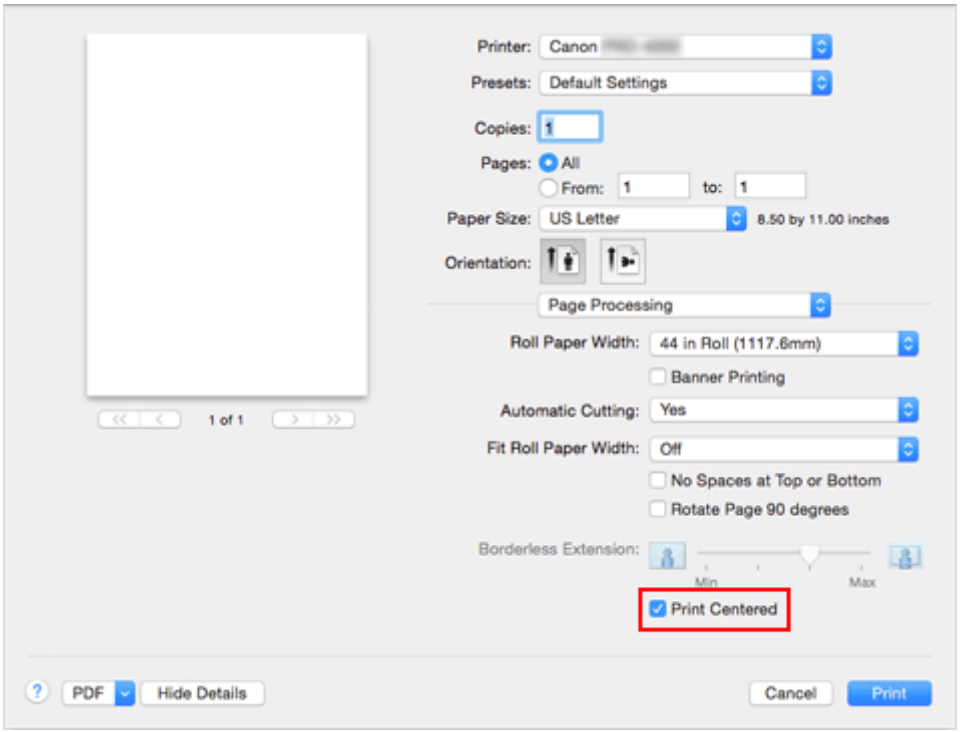

9. Complete the setup

   Click **Print**.
   When you print, the printer automatically lays out the document to the center of the page and then prints it.

Important

- When configuring to print the whole sheet borderless, the **Print Centered** in the pop-up menu **Page Processing** of the Print Dialog is grayed out and cannot be selected.

Printing by Saving Roll Paper

- Saving Roll Paper by Rotating Document 90 Degrees
- Saving Roll Paper by Eliminating Upper and Lower Margins on Document

Saving Roll Paper by Rotating Document 90 Degrees

When printing a portrait document on roll paper, you can save paper by rotating the document 90 degrees and printing the document so that it is oriented horizontally relative to the paper.

The procedure for saving paper by rotating the document 90 degrees is as follows:

1. Select **Page Processing** from the pop-up menu of the Print Dialog

2. Selecting Paper Saving

   Select the **Rotate Page 90 degrees** check box.

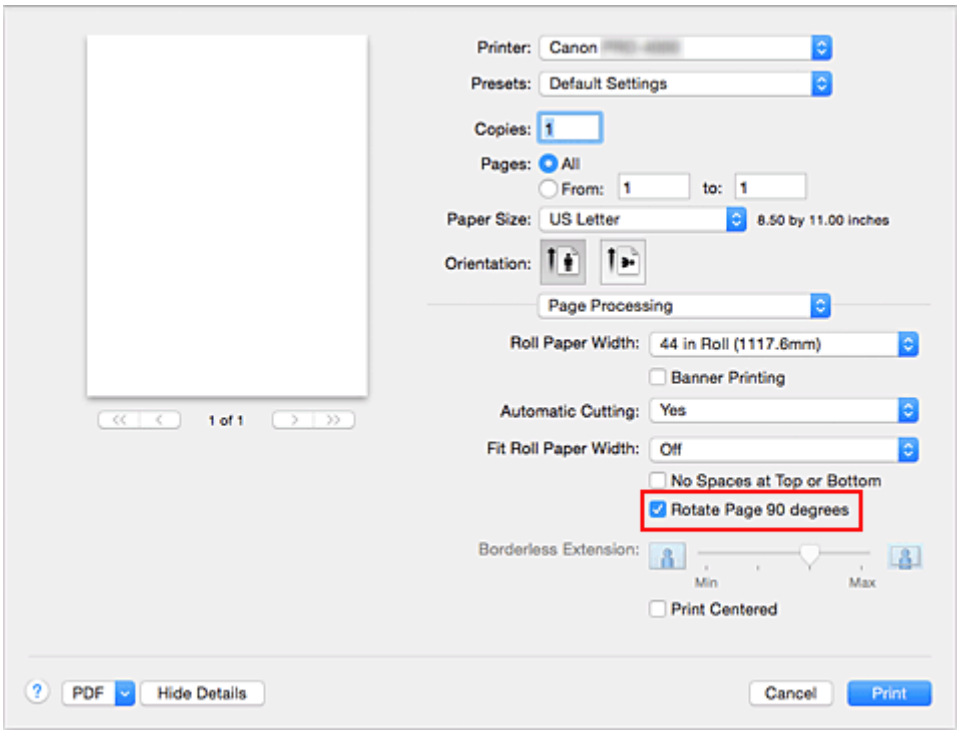

3. Complete the setup

   Click **Print**.
   When you print, you can rotate a portrait document 90 degrees to save paper.

Important

- If the **Banner Printing** check box is selected for **Page Processing**, **Rotate Page 90 degrees** is grayed out and cannot be set.
- When selecting paper in portrait format from **Paper Size** in the print dialog, when this is longer than the width selected in **Roll Paper Width**, **Rotate Page 90 degrees** cannot be used.

Saving Roll Paper by Eliminating Upper and Lower Margins on Document

When printing on roll paper, you can save paper by eliminating the upper and lower margins when printing.

The procedure for saving paper by eliminating the upper and lower margins is as follows:

1. Select **Quality & Media** from the pop-up menu of the Print Dialog

2. Select the paper source

   Select **Roll Paper (Auto)**, **Roll 1**, or **Roll 2** that matches your purpose for **Paper Source**.

   Important

   - The paper feed method will differ according to the paper or lower level (roll paper 2) settings, or roll unit option settings.

3. Select **Page Processing** from the pop-up menu

4. Selecting Paper Saving

   Check the **No Spaces at Top or Bottom** check box.

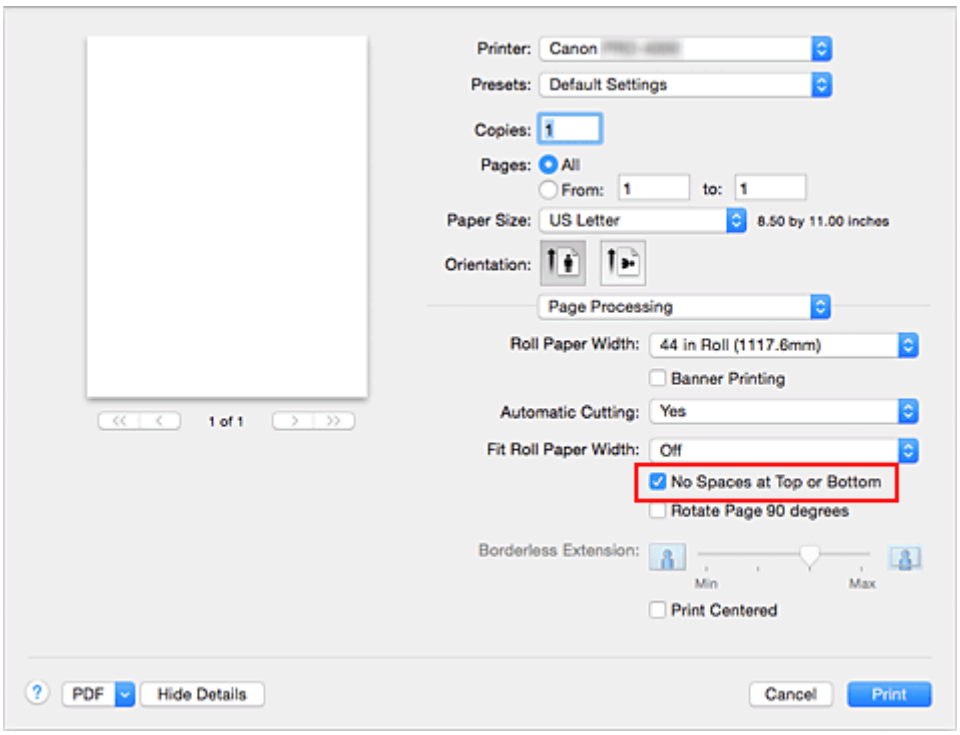

5. Complete the setup

   Click **Print**.
   When you print, the upper and lower margins are eliminated so that you can save paper.

Switching the Paper Source to Match the Purpose

This printer has three paper sources: Roll 1, Roll 2, and Cut Sheet.
You can facilitate printing by selecting a paper source setting that matches your media type or purpose.

The procedure for setting paper source is as follows:

1. Select **Quality & Media** from the pop-up menu of the Print Dialog

2. Select the media type

   For **Media Type**, select the same paper type loaded in the printer.

3. Select the paper source

   For **Paper Source**, select the item below that matches your purpose.

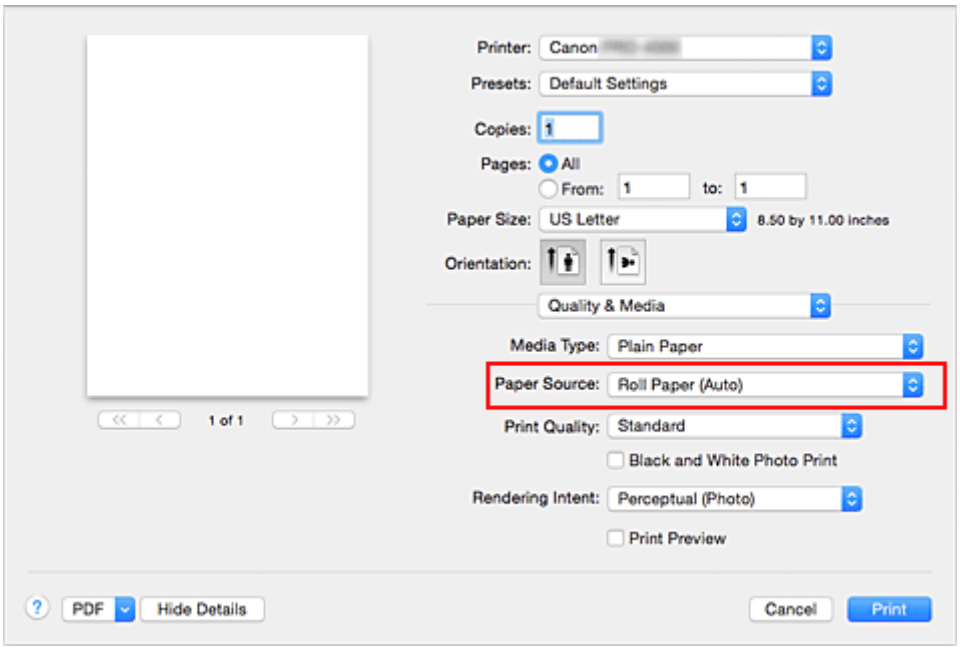

Roll Paper (Auto)
Feeds paper by automatically switching between Roll 1 and Roll 2 according to the print job.

Roll 1
Feeds paper from Roll 1.

Roll 2
Feeds paper from Roll 2.

Cut Sheet
Feeds paper that was cut to a specific paper size.

Important

- The paper feed method will differ according to the paper or lower level (roll paper 2) settings, or roll unit option settings.

4. Complete the setup

Click **Print**.

When you execute print, the printer uses the specified paper source to print the data.

Note

- If the paper settings in the printer driver differ from the paper information registered on the printer, an error message may appear on the printer's operation panel. You can still print but you may not be able to obtain correct print results.

Cutting Roll Paper after Printing

The procedure for cutting roll paper automatically and printing cut guidelines is as follows:

1. Select **Page Processing** from the pop-up menu of the Print Dialog

2. Setting Auto Cut

   From **Automatic Cutting**, select the setting that matches your purpose.

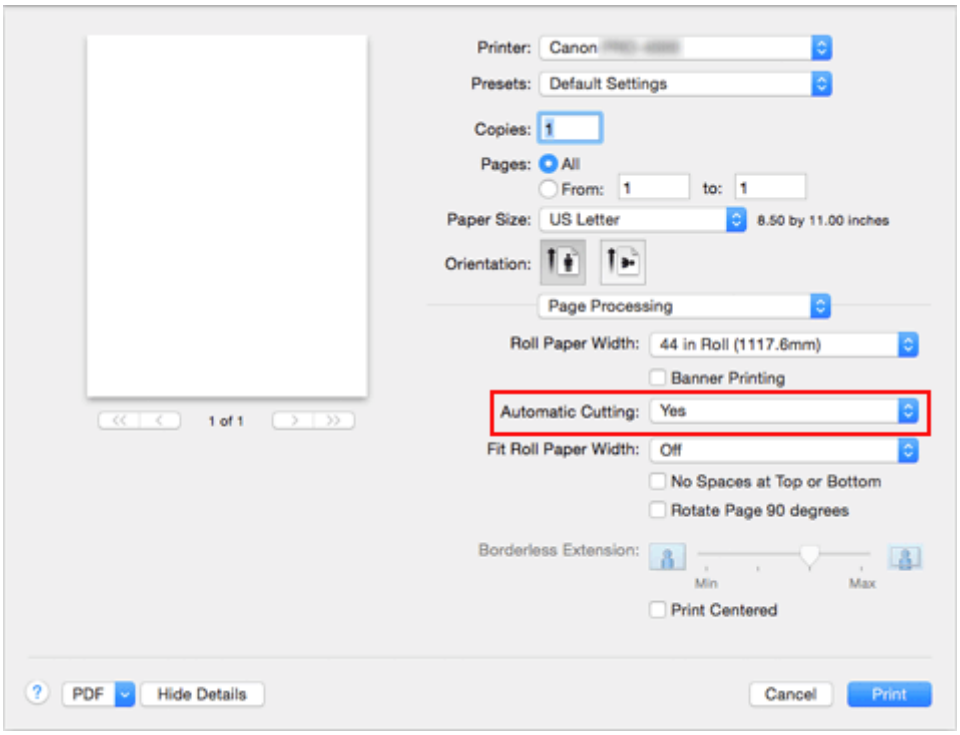

   Yes

   The roll paper is cut automatically after printing.

   None

   The roll paper is not cut after printing.

   Print Cut Guideline

   Cut guidelines are printed for cutting the roll paper manually after printing.

   Note

   - The default setting for automatic cutting is **Yes**.

3. Complete the setup

   Click **Print**.
   When you print, the roll paper is cut automatically after printing or cut guidelines are printed.

Printing from Printer

- Printing from USB Flash Drive

Printing from USB Flash Drive

- Printing Data Saved on USB Flash Drive
- Setting Items for Printing Using Operation Panel

Printing Data Saved on USB Flash Drive

You can print photo data (JPEG file) or document data (PDF file) saved on the USB flash drive easily.

Note

- Restrictions on printable PDF/JPEG files
  - PDF file:

    Files which conforms to V 1.7

    -Does not support overprint or some of transparent processing.

    -Font embedding is recommended. If a font is not embedded, it is replaced with one of the built-in fonts below.

    Times-Roman, Helvetica, Courier, Symbol, Times-Bold, Helvetica-Bold, Courier-Bold, ZapfDingbats, Times-Italic, Helvetica-Oblique, Courier-Oblique, Times-BoldItalic, Helvetica-BoldOblique, Courier-BoldOblique
  - JPEG file:

    Files which conforms to JFIF 1.02

    Supports the files with the following conditions.

    -Processing method: Basic DCT

    -Color mode: RGB/GrayScale

    -Number of colors: 24bit/8bit

    -Number of pixels: 19200 or less vertically and horizontally

    Does not support some samplings

1. Make sure printer is turned on.

2. Load paper.

   - Loading Rolls on the Roll Holder
   - Loading the Upper Roll on the Printer
   - Loading Sheets in the Printer

3. Insert USB flash drive into USB flash drive port.

4. Flick HOME screen and tap **Print from USB flash drive**.

   - Menu Operations

   Note

   - When the message informing you that the operation restriction is enabled, ask the administrator of the printer you are using.
   - If no printable data is saved on the USB flash drive, **There are no files that can be printed.** is displayed on the touch screen.

5. Tap folder or data to print on displayed screen.

Tapping a folder displays the data list. Tap the data to print.

Note

- If no printable data is saved on the folder you tapped, **There are no files that can be printed.** is displayed on the touch screen.

The screen below appears.

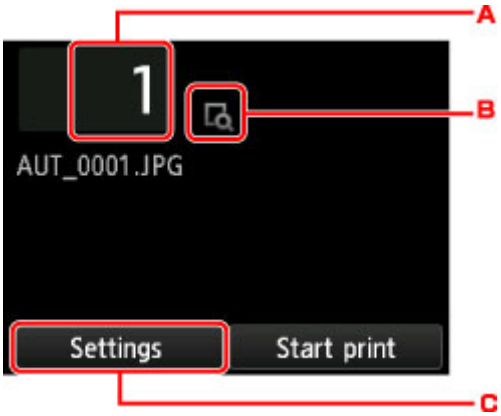

A. Number of copies

Tap to display the screen below and specify the number of copies.

B. Preview

Tap to preview an image of the printout on the preview screen.

C. **Settings**

Tap to display the **Settings** screen.

You can change the print settings.

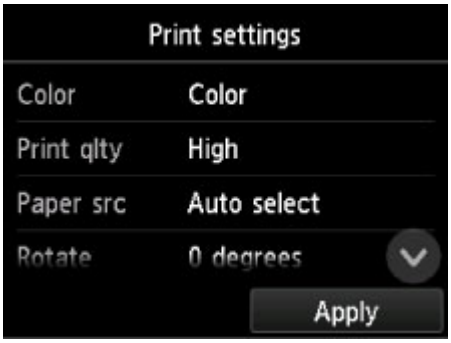

For more on the setting items:

Setting Items for Printing Using Operation Panel

6. Tap **Start print**.

   The printer starts printing.

Note

- Tapping **Yes** on the displayed screen returns to step 5. Tap a folder or data to print.
- Tapping **No** returns to HOME screen.

Setting Items for Printing Using Operation Panel

You can specify the print settings to print data saved on the USB flash drive.

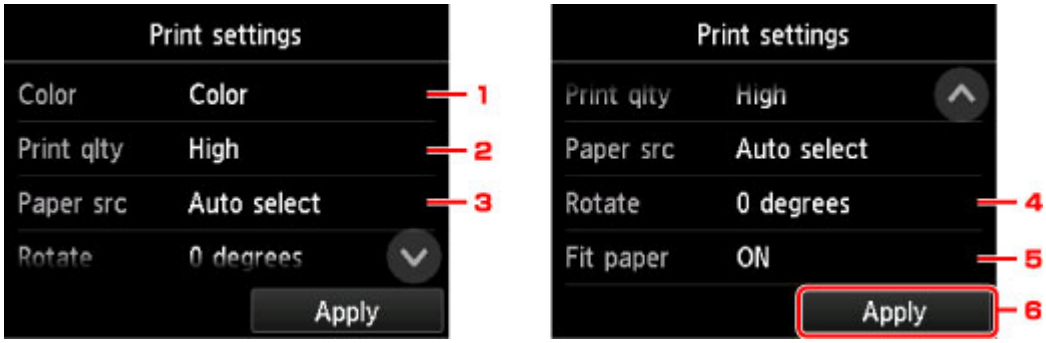

Flick vertically or tap to display setting items and tap the setting item to display the settings. Tap to specify the setting.

1. **Color**

   Select color or black and white printing.

2. **Print qlty** (Print quality)

   Select print quality according to the photo.

3. **Paper src** (Paper source)

   Select where to feed paper.

4. **Rotate**

   The image is printed rotated by 90 degrees if you select **90 degrees**.

5. **Fit paper**

   Select whether to print to fit the loaded paper.

6. Tap to specify the print settings.

Printing from Smartphone/Tablet

For more on printing from a device via wireless LAN, refer to the device's or application's instruction manual.

- **Connecting Smartphone/Tablet to Printer Directly via Wireless LAN (Direct Connection)**

Connecting Smartphone/Tablet to Printer Directly via Wireless LAN (Direct Connection)

You can connect devices (e.g. smartphone, or tablet) to the printer by two methods below.

- Wireless connection (connecting devices via a wireless router)
- Direct wireless connection (connecting devices using direct connection)

This section describes direct connection, which allows you to print by connecting the devices to the printer directly.

Follow the procedure below to use direct connection.

1. Enable direct connection.
2. Connect devices to printer.

This section also describes changing direct connection to wireless LAN.

Changing Printer Setting to Use Wireless LAN

Important

- The administrator password is required to change settings if it is enabled for changing settings using the operation panel.
- If a device has already been connected to the printer via wireless LAN and you want to add a device to connect, connect it to the printer directly. You can connect up to 5 devices to the printer at the same time.
- Check the usage restrictions and switch the printer to the direct connection.

  Restrictions

Preparing for Connection

Change settings below to prepare for direct connection.

- Printer's LAN settings

  Changing Printer Setting

- Settings of a device to connect

  Connecting Smartphone/Tablet to Printer

Changing Printer Setting

1. Make sure printer is turned on.
2. Flick HOME screen and tap **LAN settings**.

   Menu Operations

3. Tap **Activate direct connect.**.
4. Tap **Yes**.

The identifier (SSID) for direct connection appears.

The device detects the printer by the identifier (SSID).

Note

- If you tap **Details** and tap **Yes**, the following items appear.
  - Security setting
  - Password
  - Printer's name which appears on a Wi-Fi Direct compatible device

  The password is required when connecting a device to the printer. Depending on the device you are using, no password is required.

  When you connect a Wi-Fi Direct compatible device to the printer, select the device name displayed on the touch screen from your device.
- The identifier (SSID) and the security setting are specified automatically. To update them, see below.

  Changing Direct Connection Setting

5. Tap **OK**.

   The direct connection is enabled and a device can be connected to the printer wirelessly.

Connecting Smartphone/Tablet to Printer

1. Turn on wireless communication on your device.

   Enable "Wi-Fi" on your device's "Setting" menu.

   For more on turning on wireless communication, see your device's instruction manual.

2. Select "DIRECT-XXXX-PRO-2000" ("X" represents alphanumeric characters) from list displayed on device.

   Note

   - If "DIRECT-XXXX-PRO-2000" does not appear on the list, direct connection is not enabled.

     See Changing Printer Setting to enable direct connection.

3. Enter password.

   Your device is connected to the printer.

   Note

   - Check the password for the direct connection.

     Check by one of the following methods.

     - Display on the touch screen.

       LAN settings

     - Print the network settings.

Printing Network Settings

- Depending on the device you are using, entering the password is required to connect a device to the printer via wireless LAN. Enter the password specified for the printer.
- If your Wi-Fi Direct compatible device is set to prioritize using Wi-Fi Direct and it is connecting to the printer, the printer displays a confirmation screen asking if you allow the device to connect to the printer.

  Make sure the name on the touch screen is the same as that of your wireless communication device and tap **Yes**.

Changing Printer Setting to Use Wireless LAN

Follow the procedure below to change the printer setting to use wireless LAN.

1. Flick HOME screen and tap **LAN settings**.

   Menu Operations

2. Tap **Change LAN**.

3. Tap **Activate wireless LAN**.

   If you do not use the printer over wireless LAN, select **Activate wired LAN** or **Disable LAN**.

Changing Direct Connection Setting

Change the settings for the direct connection following the procedure below.

1. Make sure printer is turned on.

2. Flick HOME screen and tap **LAN settings**.

   Menu Operations

3. Tap **LAN settings**.

4. Tap **Other settings**.

5. Tap **Direct connection settings**.

6. Change settings as necessary.

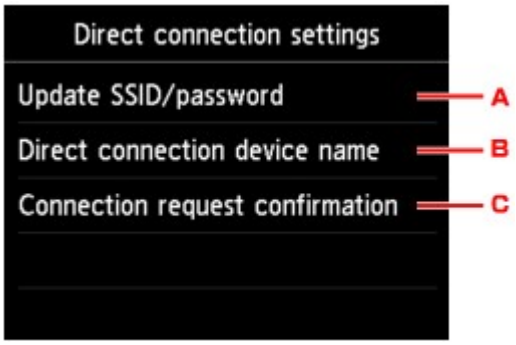

- To update the identifier (SSID) and the password for direct connection

  Tap A to display the confirmation screen. To update the identifier (SSID) and the password, tap **Yes**.

  To check the security setting and the updated password, tap **Details** and tap **Yes** on the screen displayed next.

- To change the printer's name displayed on the Wi-Fi Direct compatible device

  Tap B to display the printer's name (device name) displayed on a Wi-Fi Direct compatible device.

  Follow the procedure below to change the name.

  1. Tap touch screen.
  2. Enter device name (up to 32 characters).
  3. Tap **OK** to finish entering device name.
  4. Tap **OK** to finish specifying device name.

- To change the confirmation screen setting when a Wi-Fi Direct compatible device is connecting to the printer

  Tap C to display the confirmation screen. If you want the printer to display the screen to inform you a Wi-Fi direct compatible device is connecting to the printer, tap **Yes**.

  Important

  - To prevent an unauthorized access, we recommend you should not change the setting from the default.

When you finished performing the settings, the printer returns to the **Direct connection settings** screen.

7. Touch **HOME** button.

   The HOME screen appears.

Note

- If you change the direct connection setting of the printer, also change the wireless router setting of the device.

Windows Software

- **Printer Driver**
  - Overview of the Printer Driver
  - Printer Driver Description
  - Updating the Printer Driver
- **Printing Using Canon Application Software**
  - Preview Guide
  - Free Layout Guide
  - Print Plug-In for Office Guide
  - Direct Print & Share Guide
  - Quick Utility Toolbox Guide
  - Print Studio Pro Guide
  - Digital Photo Printing Guide
  - IJ Network Device Setup Utility
  - Media Configuration Tool Guide
  - Device Management Console Guide
  - Accounting Manager Guide

Mac OS Software

- **Printer Driver**
  - Overview of the Printer Driver
  - Description of Print Dialog
  - Updating the Printer Driver
- **Printing Using Canon Application Software**
  - Preview Guide
  - Free Layout Guide
  - Quick Utility Toolbox Guide
  - Print Studio Pro Guide
  - Digital Photo Printing Guide
  - Media Configuration Tool Guide
  - Device Management Console Guide
  - Accounting Manager Guide

Printer Driver

- Overview of the Printer Driver
- Description of Print Dialog
- Updating the Printer Driver

Overview of the Printer Driver

- Canon IJ Printer Driver
- Checking Layout in Preview before Printing
- Registering a Changed Printing Profile
- How to Open the Printer Driver Setup Window
- Page Setup Dialog
- Print Dialog
- Updating Media Information in Printer Driver
- Correcting Media Information in Printer Driver (When Printer Used in Shared Environment)
- Confirm the Printer Paper Information
- Setting Accounting Information
- Deleting the Undesired Print Job
- Canon IJ Printer Utility3
- Opening the Canon IJ Printer Utility3
- Checking the Ink Status from Your Computer
- Instructions for Use (Printer Driver)

Canon IJ Printer Driver

The Canon IJ printer driver (called printer driver below) is a software that is installed on your computer for printing data with this printer.

The printer driver converts the print data created by your application software into data that your printer can understand, and sends the converted data to the printer.

Because different models support different print data formats, you need a printer driver for the specific model you are using.

Using Help of the Printer Driver

You can display Help function from the Print Dialog.

Select a setup item from the pop-up menu in the Print dialog. Then click ? at the bottom left of the screen to display an explanation of the item.

Help for the printer driver is displayed when the following pop-up menu item is selected:

- **Quality & Media**
- **Color Options**
- **Paper Detailed Settings**
- **Page Processing**
- **Additional Settings**

Checking Layout in Preview before Printing

You can display and check the print result before printing.

The procedure for displaying the print result before printing is as follows:

1. Select **Quality & Media** from the pop-up menu of the Print Dialog

2. Select Print Preview

   Select the **Print Preview** check box.

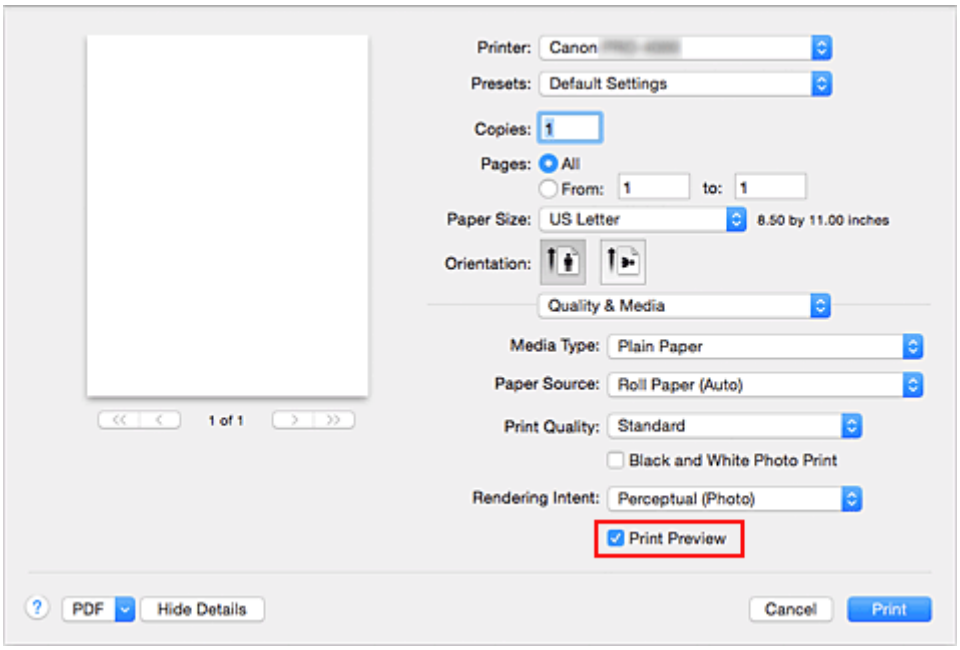

3. Complete the setup

   Click **Print**.
   When executing printing, start up Canon imagePROGRAF Preview to display the print results.

Note

- The printing results can be displayed even when selecting Canon imagePROGRAF Preview from **PDF**.

Registering a Changed Printing Profile

You can name and register the printing profile you made in the Print Dialog. The registered printing profile can be called up from **Presets** to be used. You can also delete the unnecessary printing profile.

The procedure for registering a printing profile is as follows:

Registering a Printing Profile

1. In the Print dialog, set the necessary items

2. Select **Save Current Settings as Preset...** from the **Presets**

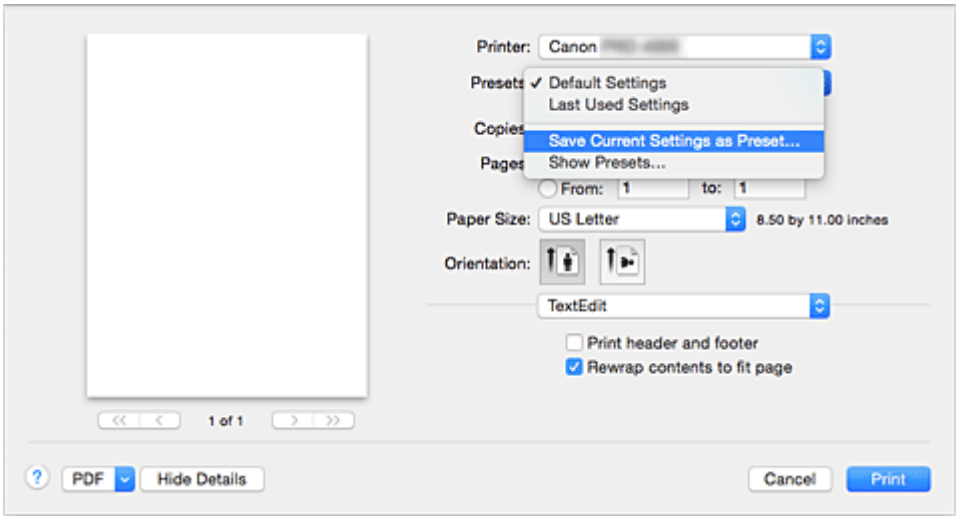

3. Save the settings

   In the displayed dialog, enter a name in **Preset Name**, and if necessary, set **Preset Available For**. Then click **OK**.

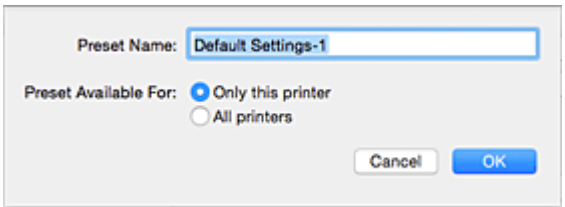

Important

- There are also print settings that cannot be saved to preset.

Using Registered Printing Profile

1. On **Presets** in the Print dialog, select the name of printing profile you want to use

   Printing profile in the Print dialog will be updated to the called profile.

Deleting Unnecessary Printing Profile

1. Select the printing profile to be deleted

   In the print dialog, select **Show Presets...** in the **Presets** section. Then in the dialog that appears, select the name of the printing profile to be deleted.

2. Delete the printing profile

   Click **Delete**, and click **OK**. The selected printing profiles will be deleted from **Presets**.

How to Open the Printer Driver Setup Window

You can display the printer driver setup window from the application software you are using.

Opening the Page Setup Dialog

Use this procedure to set the page (paper) settings before printing.

1. Select **Page Setup...** from the **File** menu of the application software

   The Page Setup Dialog opens.

Opening the Print Dialog

Use this procedure to set the print settings before printing.

1. Select **Print...** from the **File** menu of the application software

   The Print Dialog opens.

Page Setup Dialog

In the Page Setup dialog, you configure the basic print settings such as the size of paper loaded in the printer or the scaling ratio.

To open the Page Setup dialog, you typically select **Page Setup...** from the **File** menu of your application software.

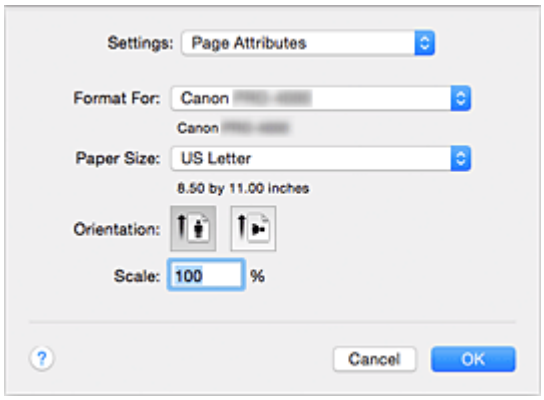

Settings

Click the pop-up menu, and then select the following items:

Page Attributes

Set the paper size or scaled printing.

Save as Default

You can save the attributes of the displayed page as the default settings.

Format For

Select the model to be used for printing.

Paper Size

Select the size of the paper to be used for printing.

To set a non-standard size, select **Manage Custom Sizes...**.

Orientation

Select the print orientation.

Scale

Set the scaling percentage.

You can expand or reduce the size of the document when printing.

Print Dialog

In the Print dialog, you can set paper type, paper source and print quality to start printing.

To open the Print dialog, you typically select **Print...** from the **File** menu of your application software.

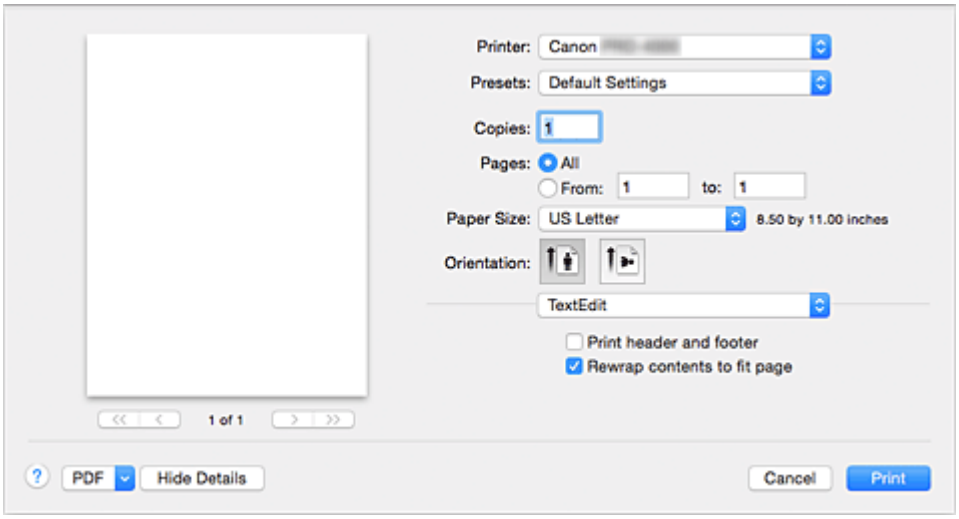

Printer

Select the model to be used for printing.

When you click **Add Printer...**, a dialog for specifying the printer opens.

Presets

You can save or delete the settings of the Print dialog.

Note

- You can select **Show Presets...** to check the print settings that are set in the Print dialog.

Copies

You can set the number of copies to be printed.

Note

- You can set collated printing by choosing **Paper Handling** from the pop-up menu.

Pages

You can set the range of pages to be printed.

Paper Size

Select the size of the paper to be used for printing.

To set a non-standard size, select **Manage Custom Sizes...**.

Orientation

Select the print orientation.

Pop-up Menu

You can switch between pages in the Print dialog by the pop-up menu. The first menu to appear differs depending on the application software that opened the Print dialog.

You can choose one of the following items from the pop-up menu.

Layout

You can set page layout printing.

Use **Reverse page orientation** to change the paper orientation, and use **Flip horizontally** to print a mirror image of the document.

Color Matching

You can select the color correction method.

Paper Handling

You can set the pages to be printed on paper and the print order.

Cover Page

You can output cover pages both before and after a document.

Quality & Media

You can set basic print settings that match the printer.

Color Options

You can adjust the print colors as you desire.

Paper Detailed Settings

Specifies detailed print settings that match the media type loaded in the printer.

Page Processing

You can configure the detailed settings when printing to roll paper, and adjust the amount of the source document that sticks out from the page when printing all borderless.

Additional Settings

The output method can be set.

Supply Levels

A rough indication of the remaining ink level is displayed.

PDF

You can save a document in PDF (Portable Document Format) format.

By starting up Canon imagePROGRAF Preview, it is possible to allocate multiple source documents, and display the print results in imagePROGRAF Preview.

Updating Media Information in Printer Driver

This function gets the latest media information from the printer and updates the media information in the printer driver.

When the media information is updated, the media displayed for **Media Type** on the **Quality & Media** screen is updated to the latest information.

The procedure for updating media information is described below.

Update Media Information

1. From the Canon IJ Printer Utility3 pop-up menu, select **Media Information**

2. Click **Update Media Information**

   A dialog appears.

3. Check that the media information has updated

   By following the dialog instructions, check that the printer is on, and then click **OK**.
   After checking whether or not the printer media information needs to be updated, a message will be displayed.
   If the printer media information is up to date, click **OK** and finish updating media information.
   If the information needs to be updated, follow the below steps to do so:

4. Update media information

   Check the message and click **Update**.
   The printer driver media information will update.
   When the authentication screen appears, enter the administrator's name and password, and then click **Install Helper**.

   Important

   - It may take some time to update the media information.
   - Do not change media information on the printer while you are updating media information on the driver.

5. Finish updating media information

   When a confirmation message appears, click **OK**.
   The media information will be updated.

   Important

   - Restart the application or software you are printing from after updating media information.

Important

- Ensure that a user with administrator privileges carries out the media information update.
  Users other than administrators can check if a media information update is required, but cannot carry out the update itself.
- When you have added, deleted, or edited media using administrative tools (the Media Configuration Tool) but have not updated the media information, issues may arise such as the inability to print.

Note

- If the printer is being shared, **Correct Media Information** will display on the client machine.

Correcting Media Information in Printer Driver (When Printer Used in Shared Environment)

The printer driver media information will be corrected.

Carrying out a media information correction will correct the configuration of the media information in the printer driver.

The procedure for correcting media information is described below.

Correct Media Information

1. From the Canon IJ Printer Utility3 pop-up menu, select **Media Information**

2. Click **Correct Media Information**

   After checking whether or not the printer driver's media information is correct, a message will be displayed.
   If the printer media information is set correctly, click **OK** and finish correcting media information.
   If the information needs to be corrected, follow the below steps to do so:

3. Correct media information

   When a confirmation message appears, click **OK**.
   The printer driver media information will be corrected.
   When the authentication screen appears, enter the administrator's name and password, and then click **Install Helper**.

4. Complete media information correction

   When a confirmation message appears, click **OK**.
   The paper information will be corrected.

Important

- Restart the application or software you are printing from after correcting media information.

Note

- **Media Information** will only be displayed on the client machine in use when the printer is being shared.

Confirm the Printer Paper Information

From the printer driver, you can check the size and type of paper that was set to the printer and check the remaining paper amount.

The procedure for checking paper information from the printer driver is as follows:

1. From the Canon IJ Printer Utility3 pop-up menu, select **Paper Information on Printer**

2. Check printer's paper information

   When you select the paper source to be checked from the list, the current settings and status of the printer, including **Size**, **Roll Paper Width**, **Media Type**, **Paper Remaining**, are displayed.

Important

- When using connected to the network, the **Paper Information on Printer** is not displayed on OS X Mountain Lion v10.8, or OS X Lion v10.7.

Note

- Click **Update** to update the information to the latest information.
- The content displayed will differ depending on the paper feed position selected.

Setting Accounting Information

By Setting Accounting Information, you add IDs to print jobs, and use the printer and cost management tool to tabulate print history information for any ID.

The procedure for Setting Accounting Information is described below.

1. From the Canon IJ Printer Utility3 pop-up menu, select **Accounting**

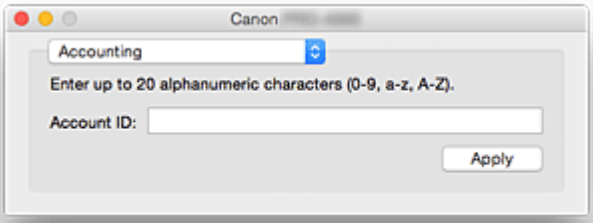

2. Set **Account ID**

   Set an Account ID, as necessary.

   Account ID

   Enter the Account ID to be set. Enter the ID by using up to 20 alphanumeric characters (0 to 9, a to z, A to Z).

3. Apply settings

   Check that the printer is on, and then click **Apply**.
   When the confirmation message appears, click **OK**.
   The setting is now valid.

Note

- If the printer is being shared, **Accounting** information cannot be set on client machines.

Deleting the Undesired Print Job

If the printer does not start printing, canceled or failed print job data may be remaining.
Delete unnecessary print jobs from the print status check screen.

1. Open **System Preferences**, and select **Printers & Scanners** (**Print & Scan**)

2. Select your model, and then click **Open Print Queue...**

   The print status check screen appears.

3. Select the unnecessary print job and click (**Delete**)

   The selected print jobs will be deleted.

Display the Printing Status Screen

Check the print progress according to the following procedure:

1. Launch the printing status screen

   - If the print data has been sent to the printer

     The printing status screen opens automatically. To display the printing status screen, click the (the printer icon) displayed on the Dock.
   - If the print data has not been sent to the printer

     Open **System Preferences**, and select **Printers & Scanners** (**Print & Scan**).
     To display the printing status screen, select the name of your printer model from the printer list, and then click **Open Print Queue...**.

2. Checking the printing status

   You can check the name of the file being printed or ready for being printed.

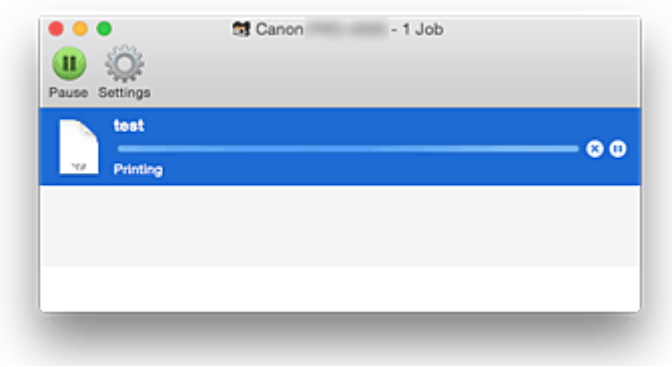

Deletes the specified print job.

Stops printing the specified document.

Resumes printing the specified document.

Stops printing all documents.

Displayed only when printing of all documents is being stopped, and resumes printing all documents.

Note

- Depending on your model, the printer icon display may be different.

Canon IJ Printer Utility3

The Canon IJ Printer Utility3 allows you to perform printer maintenance or change the settings of the printer.

What You Can Do with the Canon IJ Printer Utility3

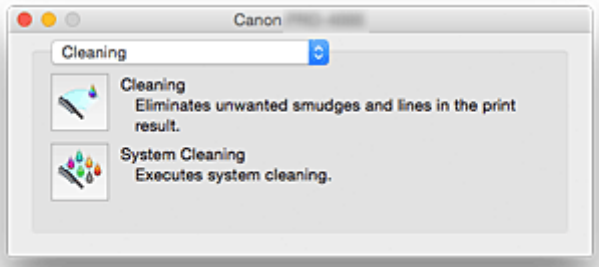

You can switch between pages in Canon IJ Printer Utility3 by the pop-up menu. You can choose one of the following items from the pop-up menu.

Cleaning

Clean the printer to clear up clogged print head nozzle.

Test Print

Perform a test print to check the state of the print head nozzle and adjust the paper feed volume.

- Printing a Nozzle Check Pattern
- Adjusting the Paper Feed Volume

Media Information

Gets the latest media information from the printer and updates the media information in the printer driver.

Accounting

Allows you to set IDs for each job and each user, and manage the print history and print jobs.

Note

- If the printer is being shared, **Accounting** information cannot be set on client machines.

Paper Information on Printer

The printer's paper information is displayed.

Ink Level Information

Check the remaining ink levels.

Note

- To operate the Canon IJ Printer Utility3, you must first turn on the printer.
- Depending on the items selected, the computer communicates with the printer to obtain information. If the computer is unable to communicate with the printer, an error message may be displayed. If this happens, click **Cancel** to display the most recent settings specified on your computer.

Opening the Canon IJ Printer Utility3

To open the Canon IJ Printer Utility3, follow the steps below.

1. Open **System Preferences**, and select **Printers & Scanners** (**Print & Scan**)

2. Start the Canon IJ Printer Utility3

   Select your model from the printer list, and click **Options & Supplies...**.

   Click **Open Printer Utility** in **Utility** tab.

   Canon IJ Printer Utility3 is launched.

Checking the Ink Status from Your Computer

You can check the detailed information such as the remaining ink level and the ink tank types of your model.

When you select **Ink Level Information** from the Canon IJ Printer Utility3 pop-up window, an illustration showing the status of the ink tanks and maintenance cartridge appears.

Estimated ink levels

You can check the types and levels of ink.
When ink levels are running low or an error occurs because there is no ink, a notification icon will appear.
If you place the cursor on the ink tank, it will display the ink model number and the ink levels.

Estimated Maintenance Cartridge Usage

You can check the estimated usage amount of the maintenance cartridge.
When capacity levels are low or the cartridge is at full capacity, a notification icon will appear.

Note

- Click ? to check which ink tank your model uses.
- Clicking **Update** will display the current status of ink tanks and the maintenance cartridge.

Instructions for Use (Printer Driver)

This printer driver is subject to the following restrictions. Keep the following points in mind when using the printer driver.

Restrictions on the Printer Driver

- When you set up the Page Setup dialog, be sure to begin by selecting the model you are using from the **Format For** list. If you select another printer, printing may not be performed properly.
- If the Canon IJ Printer Utility3 does not display the remaining ink level in the **Ink Level Information**, check whether the print head and the ink tank are properly installed.
- When the Canon IJ Printer Utility3 displays the **Ink Level Information**, close the cover of the printer.
- The following functions cannot be used in Mac OS, though they can be used in Windows computers.
  - Poster Printing
- Depending on the application software that you are using, a preview may not be displayed on the left side of the Print dialog.
- If you connect this printer and AirPort with a USB cable and print, you must install the latest AirPort firmware.
- If you are using OS X Mavericks v10.9, close the print status check window when you perform printer maintenance from the Canon IJ Printer Utility3.
- When using connected to the network, as the Canon IJ Printer Utility3 **Ink Level Information** is not displayed on OS X Mountain Lion v10.8, or OS X Lion v10.7, the ink status cannot be confirmed from the printer driver.

Notes on Adding a Printer

- If you will be installing the Canon printer driver on a Mac OS and using the printer through a network connection, select the printer name that contains Bonjour in the **Add** (**Add Printer**) dialog.
  If several options are displayed under **Use** in the **Add** (**Add Printer**) dialog, choose Canon XXX (where "XXX" is your model name) in order to maximize your ability to control settings during printing.
- If you install a Canon printer driver to OS X Yosemite v10.10 or OS X Mavericks v10.9 and use a USB connection, the **Add** (**Add Printer**) dialog may display several selections for **Use**.
  We recommend that you use Canon XXX (XXX is the model) so that you can specify detailed print settings.

Description of Print Dialog

- Quality & Media
- Color Options
- Paper Detailed Settings
- Page Processing
- Additional Settings
- Specifications

Quality & Media

This dialog allows you to create a basic print setup in accordance with the paper type. Unless special printing is required, normal printing can be performed just by setting the items in this dialog.

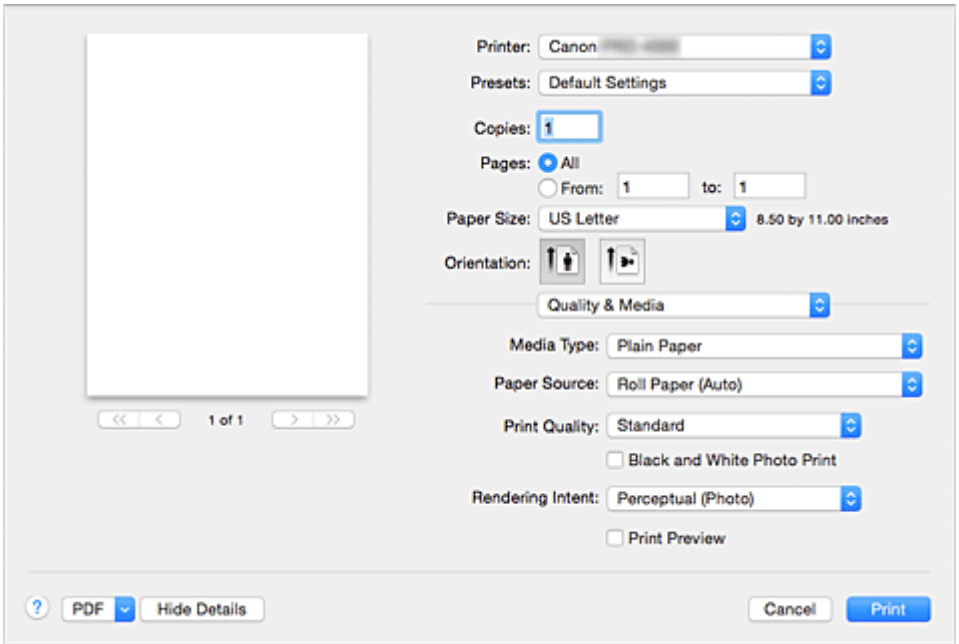

Media Type

Select the type of media to be used.

You must select the type of media actually loaded in the printer. This selection enables the printer to carry out printing properly for the material of the media used.

Note

- If ⓘ is displayed, start up the Canon IJ Printer Utility3 and either correct or update media information.

Paper Source

Select the source from which paper is supplied.

Roll Paper (Auto)

Depending on the paper settings on the printer driver and the paper information registered to the printer, the printer automatically determines which roll paper to use and then feeds that paper.

Roll 1

Paper is fed from Roll 1.

Roll 2

Paper is fed from Roll 2.

Cut Sheet

Feeds paper using the cut paper.

Print Quality

Select the one that is closest to the original document type and the purpose.

When one of the radio buttons is selected, the appropriate quality will be set automatically.

Highest

Prints with quality as the highest priority.

High

Gives priority to print quality over printing speed.

Standard

Prints with average speed and quality.

Custom

Select this radio button to specify a quality.

Quality

When you select **Custom** in **Print Quality**, you can use the slider bar to adjust the print quality level.

Black and White Photo Print

Set black and white photo printing. Black and white photo printing refers to the function of converting your document to grayscale data in the printer to print it in monochrome.

When you check the check box, both monochrome and color documents will be printed in monochrome. When printing a color document, be sure to uncheck the check box.

Rendering Intent

Specify the method of matching to use when selecting **Canon Color Matching** in **Color Matching**.

Perceptual (Photo)

This method reproduces images by focusing on colors that most people find desirable. Select this method to print photos.

Saturation (Poster)

This method reproduces images even more vividly than the **Perceptual (Photo)** method.

No Color Correction

Color correction is not performed.

Print Preview

You can start up the Canon imagePROGRAF Preview, and check what the printing results will be before executing the print.

Check this check box to display a preview before printing.

Related Topics

- Switching the Paper Source to Match the Purpose
- Setting the Print Quality Level (Custom)
- Printing a Color Document in Monochrome

Color Options

This dialog allows you to adjust the print color as you like. If the color of the printed image is not as expected, adjust the properties in the dialog and retry printing.

The adjustments made here do not affect the colors of the original print data unlike application software dedicated to image processing. Use this dialog just to make fine adjustments.

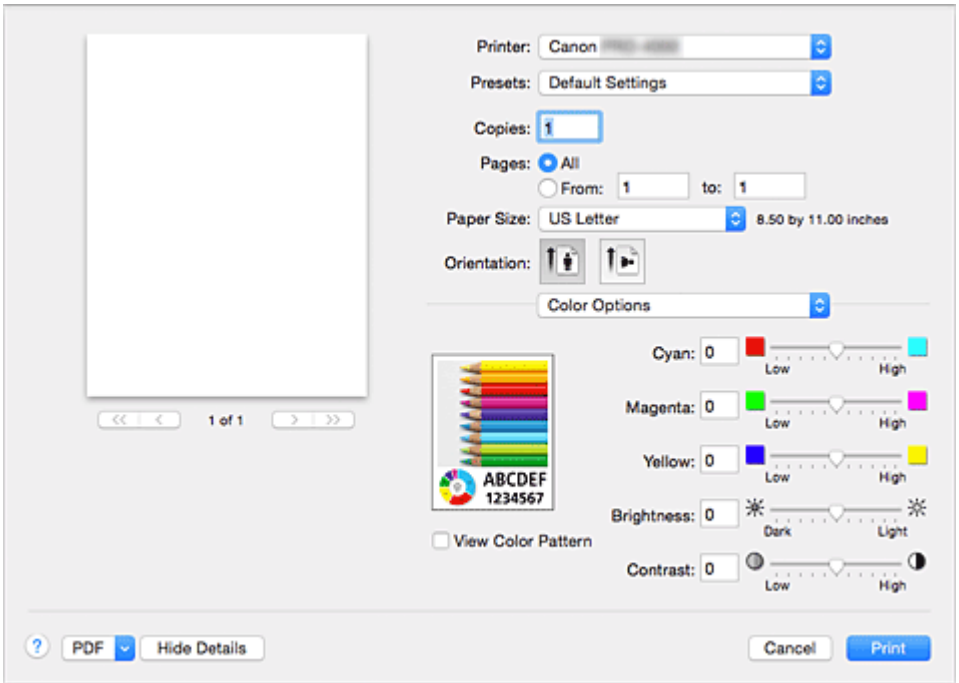

Preview

Shows the effect of color adjustment.

As you adjust each item, the effects are reflected in the color and brightness.

View Color Pattern

Displays a pattern for checking color changes produced by color adjustment.

When you want to display the sample image with a color pattern, check this check box.

Note

- When the **Black and White Photo Print** check box is checked in the **Quality & Media**, the graphic is displayed in monochrome.

Color balance (Cyan, Magenta, Yellow)

If necessary, adjust the strength of each color. To strengthen a color, drag the slider to the right. To weaken a color, drag the slider to the left.

You can also directly enter a value linked to the slider. Enter a value in the range from -50 to 50.

Adjusting the color balance will result in variations in the balance among the volumes of the individual color inks and hence in the hues of the document as a whole.

Use the printer driver only when adjusting the color balance slightly. To change the color balance significantly, use the application software.

Tone

Sets the color adjustment for monochrome printing.

You can select **Cool Tone**, **Black and White**, **Warm Tone** or **Custom**.

You can also enter **X** and **Y** values while checking the color tone, click the adjustment area with the mouse, or adjust the tone by dragging the slider.

Cool Tone

This item adjusts color tones to cool shades of gray (cool black). When you select **Cool Tone**, a value of -30 is entered for **X**, and a value of 0 for **Y**.

Black and White

This item adjusts color tones to neutral shades of gray. When you select **Black and White**, a value of 0 is entered for **X**, and a value of 0 for **Y**.

Warm Tone

This item adjusts color tones to warm shades of gray (warm black). When you select **Warm Tone**, a value of 30 is entered for **X**, and a value of 0 for **Y**.

Custom

You can adjust the color tones while checking the colors in the adjustment area. To adjust the color tones, either enter values directly or click the up/down arrows. You can also adjust the color tones by clicking or dragging the adjustment area with the mouse. If you select another color tone and then select **Custom** again, the values that were preset in **Custom** are restored.

X, Y (Monochromatic adjustment value)

If necessary, you can adjust monochromatic colors manually. To adjust the color tones, either enter values directly or click the up/down arrows. You can also adjust the color tones by clicking or dragging the adjustment area with the mouse. When you enter values, set values in the range of -100 to 100 for **X**, and -50 to 50 for **Y**. The selected value will be shown in the preview on the left side.

Important

- **Tone** and **X**, **Y** (Monochromatic adjustment value) are displayed when **Black and White Photo Print** check box is selected for **Quality & Media**.
- With the **Quality & Media** of **Media Type**, depending on the type of paper selected, **Tone**, **X** and **Y** are grayed out and cannot be set.
  For paper for which **Tone**, **X** and **Y** can be used, select the paper you want to use from "Paper Information List" and check the information.

Brightness

Adjusts the brightness of your print. You cannot change the levels of pure white and black. However, the brightness of the colors between white and black can be changed. Colors become brighter as you drag the slider toward the right and darker as you drag the slider toward the left. You can also directly enter brightness values that are linked to the slider bar. Enter a value in the range from -50 to 50.

Contrast

The Contrast function changes the differences between light and dark in images during printing.
To make the differences between the light and dark portions of images greater and more distinct, increase the contrast. On the other hand, to make the differences between the light and dark portions of images smaller and less distinct, reduce the contrast.
You can also directly enter a value linked to the slider. Enter a value in the range from -50 to 50.

Important

- When the **Black and White Photo Print** check box is checked for **Quality & Media**, the color balance (**Cyan**, **Magenta**, **Yellow**) are unavailable.

- If you select **ColorSync** for **Color Matching**, then the color balance (**Cyan**, **Magenta**, **Yellow**), **Tone**, **X**, **Y**, **Brightness**, and **Contrast** appear grayed out and are unavailable.

Related Topics

- Specifying Color Correction
- Adjusting Color Balance
- Adjusting Brightness
- Adjusting Contrast

Paper Detailed Settings

Use this dialog box to set detailed print settings that match the media type loaded on the printer.

If the paper becomes stained during printing or if the quality of the print results is less than expected, using these settings may improve the print results.

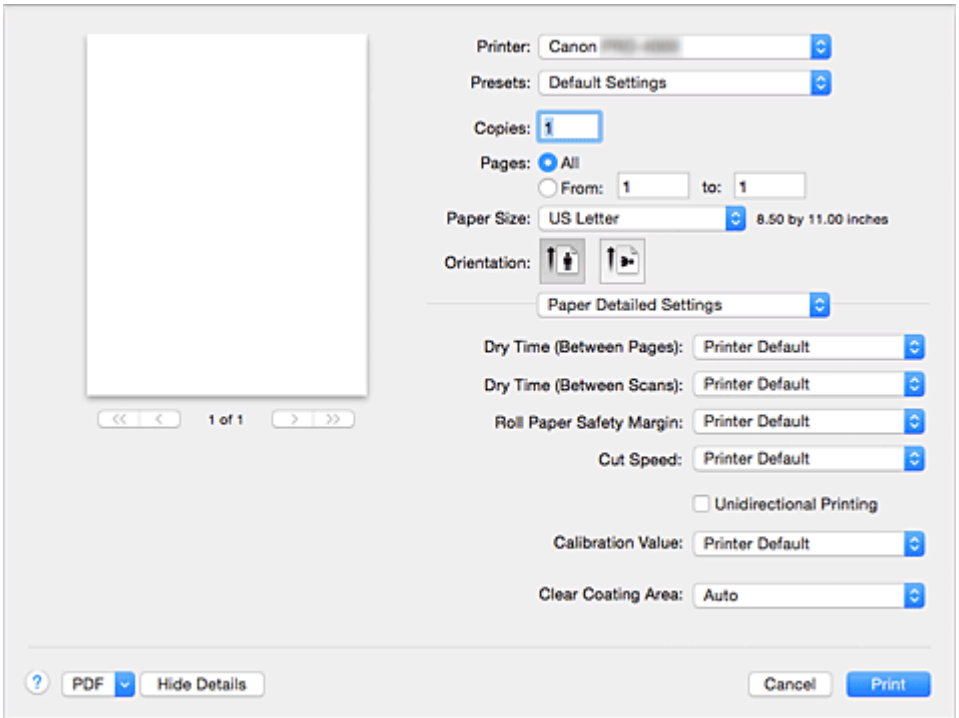

Dry Time (Between Pages)

Allows you to set the interval between the time each page is printed and the time it exits the printer. Since a certain waiting time is required for the ink to dry before the roll paper is cut, even when, on **Page Processing**, **Automatic Cutting** is set to **Yes**, you can let the document fall into the basket with the ink dried.

The **Dry Time (Between Pages)** setting is effective only for roll paper.

Settings	Details
Printer Default	Applies the settings configured in the control panel of the printer unit.
None	Documents are ejected immediately after printing is over.
30 seconds / **1 minute** / **3 minutes** / **5 minutes** / **10 minutes** / **30 minutes** / **60 minutes**	After printing is over, documents are ejected after the set time has elapsed.

Dry Time (Between Scans)

Allows you to set the interval between the printing of a line on a page and the printing of the next line. Prevents ink bleeding on a page or uneven coloring during borderless printing.

Settings	Details
Printer Default	Applies the settings configured in the control panel of the printer unit.
None	Each line is printed immediately after the previous one.

1 second / **3 seconds** / **5 seconds** / **7 seconds** / **9 seconds**	After one line has been printed, the next one will be printed after the set time has elapsed. * Increase the interval depending on the occurrence of bleeding and uneven coloring.

Roll Paper Safety Margin

Allows you to specify the length of the white margins on the edges of the paper in order to make even significantly curled paper adsorb to the platen.

Settings	Details
Printer Default	Applies the settings configured in the control panel of the printer unit.
3mm	Prints in standard-size. * Choose this setting if there are no particular problems when printing.
20mm	Choose this setting in case of chafing against the print head, for example when using significantly curled paper.

Cut Speed

Allows you to select the speed of automatic cutting. Use it to adjust the automatic cutting function when clean cutting is not possible.

Settings	Details
Printer Default	Applies the settings configured in the control panel of the printer unit.
Fast	Choose this if clean cut surfaces are not possible with the **Standard** setting.
Standard	Choose this if there are no particular problems with automatic cutting.
Slow	Choose it when using adhesive paper in order to prevent the glue from sticking to the cutter and to avoid a drop in cutting performance.

Unidirectional Printing

Suppresses uneven coloring and line shifts during printing.

To perform unidirectional printing, check this check box.

Calibration Value

Allows you to apply the results of calibration performed on the printer. To apply the calibration values, select **Use Value**.

Clear Coating Area

Set the clear coating area.

Auto

The printer automatically sets the areas to be clear-coated and whether clear coating is to be executed.

It may be possible to reduce the ink consumption of the chroma optimizer (CO) or to accelerate the print speed.

Overall

The printer clear-coats the entire print area.

If selecting **Auto** produced unsatisfactory clear coating effects, selecting **Overall** may improve the results.

Important

- You may not be able to select **Overall** depending on the paper type and print quality.

Page Processing

You can configure advanced settings for printing on roll paper and adjust how much of the document extends outside the paper when printing borderless.

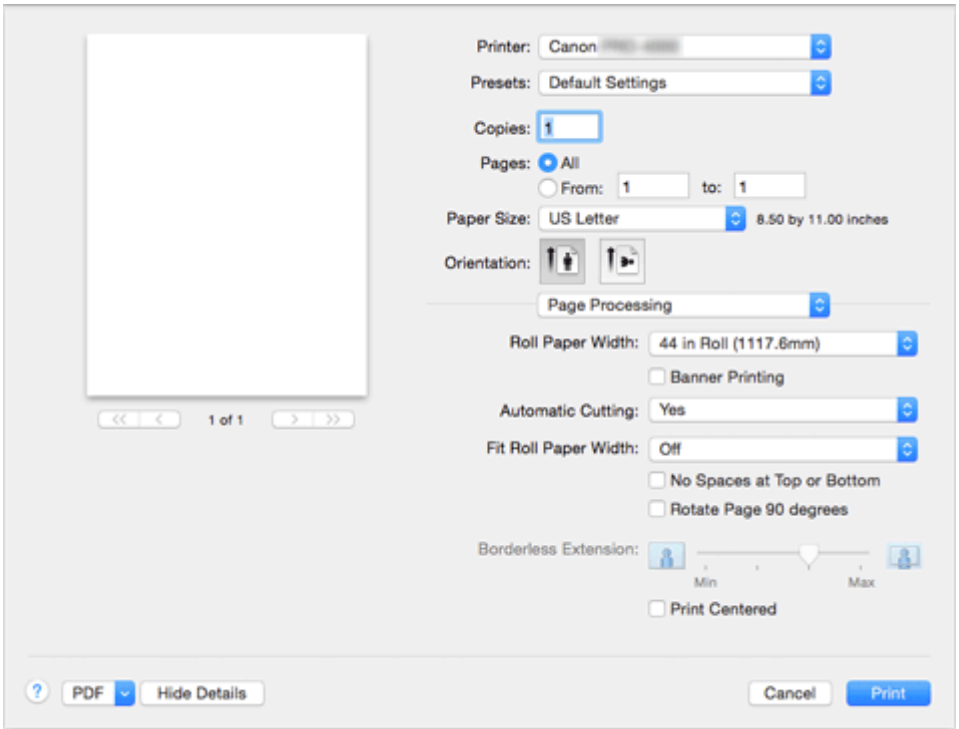

Roll Paper Width

Select the roll paper width.

Select the width that matches the width of the roll paper loaded in the printer.

Banner Printing

Select this check box to print documents extending over several pages as one continuous document without any spaces between the pages.

Automatic Cutting

You can set whether to have the paper cut automatically or to have cut lines printed on the paper

The following settings can be configured for automatic cutting

Settings	Contents
Printer Default	Applies the settings configured in the control panel of the printer unit.
None	After printing is over, the printer goes on to print the next set of data without cutting the paper into individual pages.
Print Cut Guideline	After printing is over, the printer prints cutting lines on each page and goes on to print the next set of data.

Fit Roll Paper Width

The printer automatically expands or reduces the document to match the roll paper width and then prints the document.

Off

The document is printed as-is without being expanded or reduced.

On (Bordered)

The printer automatically expands or reduces the document to match the roll paper width and then prints the document.

On (Borderless)

When borderless printing is performed, the printer automatically enlarges or reduces the document to match the roll paper width and then prints the document.

No Spaces at Top or Bottom

When printing on roll paper, you can save paper by eliminating the upper and lower margins when printing.

Rotate Page 90 degrees

Rotate the long edge of the document 90 degrees, match it to the width of the roll paper, and then print the document.

When you print a portrait document onto roll paper, you can save paper by rotating the document 90 degrees and print the document horizontally relative to the paper.

Borderless Extension

Adjusts how much of the document extends outside the paper by using the **Borderless Extension** slider bar.

Drag to slider bar to the right to increase the extension amount, and to the left to decrease the extension amount.

Print Centered

Prints document in center of paper.

Related Topic

- Prints without Edges Based on the Scenarios

Additional Settings

Use this dialog to set the output method.

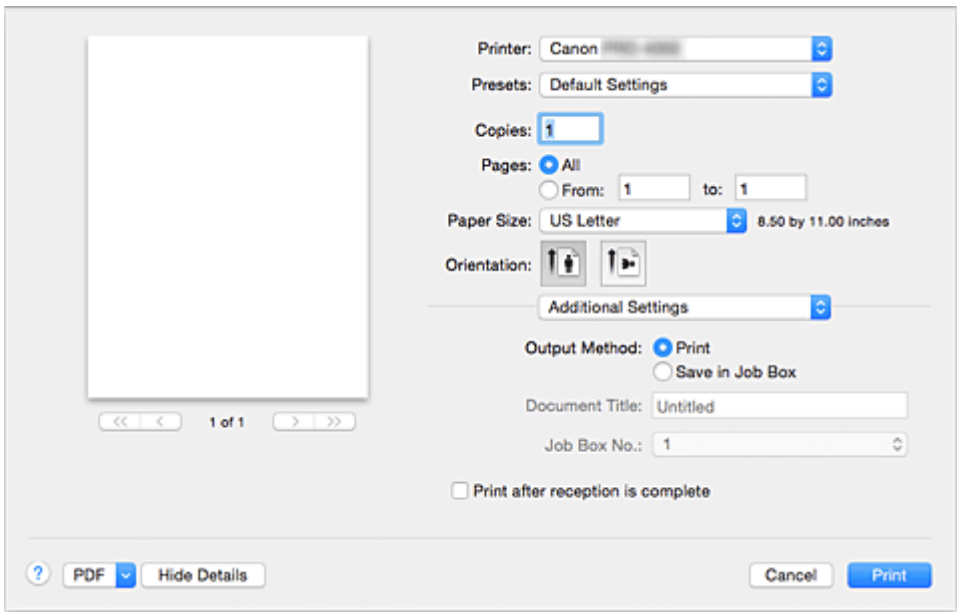

Output Method

Perform the settings to save the print job to the hard disk of the printer.

Print

Save the print job to the hard disk of the printer after printing is complete.

Save in Job Box

Save the print job to the hard disk of the printer. When selecting **Save in Job Box**, select the individual box to save to from the **Job Box No.** list.

Document Title

This can be set when selecting **Save in Job Box**.

Input the name of the document you wish to save.

Job Box No.

This can be set when selecting **Save in Job Box**.

Select the box number from the list.

Print after reception is complete

This can be set when selecting **Print**.

Checking this prevents a decrease in print quality due to the printing being suspended when receipt of the print job is interrupted.

Specifications

Important

- The following values may vary depending on the operating environment.

Paper

For details on the compatible media types, see "Paper Information List."

Paper width	For details on the paper widths supported by the printer, see "Paper Sizes."	
Minimum paper length		8.00 in (203.2 mm)
Maximum printable length	Rolls(*1)	59 feet (18 m)
	Sheets	5.2 feet (1.6 m)(*2)
Thickness	Rolls	3-31 mil (0.07-0.8 mm)
	Sheets	3-31 mil (0.07-0.8 mm)
Roll maximum outer diameter		6.7 in (170 mm) or shorter
Supported paper core inner diameter		2 in/3 in (50.8 mm/76.2 mm)
Print area	For details about Print Area, see "Print Area."	

*1:Varies depending on the operating system or application.

*2:When using stand

Updating the Printer Driver

- Obtaining the Latest Printer Driver
- Delete the Unnecessary Canon IJ Printer from the Printer List
- Before Installing the Printer Driver
- Installing the Printer Driver

Obtaining the Latest Printer Driver

By updating the printer driver to the latest version of the printer driver, unresolved problems may be solved.

You can access our website and download the latest printer driver for your model.

Important

- You can download the printer driver for free, but any Internet access charges incurred are your responsibility.

Related Topics

- Before Installing the Printer Driver
- Installing the Printer Driver

Delete the Unnecessary Canon IJ Printer from the Printer List

A Canon IJ Printer that you no longer use can be deleted from the printer list.
Before deleting the Canon IJ Printer, disconnect the cable that connects the printer to the computer.

The procedure to delete the unnecessary Canon IJ Printer from the printer list is as follows:

You cannot delete the Canon IJ Printer unless you are logged in as a user with the administrative right. For information about an administrative user, refer to the user's manual for the Mac OS.

1. Open **System Preferences**, and select **Printers & Scanners** (**Print & Scan**)

2. Delete the Canon IJ Printer from the printer list

   From the printer list, select the Canon IJ Printer to be deleted, and then click **-**.

   Click **Delete Printer** when the confirmation message appears.

Before Installing the Printer Driver

This section describes the items that you should check before installing the printer driver. You should also refer to this section if the printer driver cannot be installed.

Checking the Personal Computer Settings

- Terminate all running applications.
- Log on as a user who has the administrator account. The installer will prompt you to enter the name and password of the administrative user. When multiple users are using Mac OS, log on with the account of the administrator who registered first.

Important

- When you upgrade Mac OS, all printer drivers that were installed will be deleted.
  If you plan to continue using this printer, re-install the latest printer driver.

Related Topics

- Obtaining the Latest Printer Driver
- Installing the Printer Driver

Installing the Printer Driver

You can access our web site through the Internet and download the latest printer driver for your model.

The procedure for installing the downloaded printer driver is as follows:

1. Mount the disk

   Double-click the disk image file you have downloaded.
   The file is unpacked, and then the disk is mounted.

2. Start the installer

   Double-click "PrinterDriver_XXX_YYY.pkg" (where "XXX" is your model name, and "YYY" is version) contained in the disk.

3. Start the installation

   Install the printer driver according to the messages on the screen.

   When the Software License Agreement is displayed, check the contents, and click **Continue**. If you do not agree to the terms of the Software License Agreement, you cannot install this software.

4. Selecting the install destination

   If necessary, select where you want to install the printer driver, and then click **Continue**.

5. Executing the installation

   Click **Install**.
   When the authentication screen is displayed, enter the name and password of the administrator, and then click **Install Software**.

6. Complete the installation

   When the completion message appears, click **Close**.

The printer driver is installed successfully.

Important

- If the Installer does not operate properly, select **Quit Installer** from the **Installer** menu of the Finder to quit the Installer. Then start the Installer again.
- You can download the printer driver for free, but you are responsible for paying any connection fees to the Internet.

Related Topics

- Obtaining the Latest Printer Driver
- Delete the Unnecessary Canon IJ Printer from the Printer List
- Before Installing the Printer Driver

Managing Print Jobs

- **Checking Print Job Information**
- **Accounting Manager Guide**
- **Basic Print Job Operations**
  - Using Printer Hard Disk
  - Saving Print Jobs on Printer Hard Disk
  - Managing Job Queue (Deleting or Preempting Other Jobs)
  - Managing Pending Jobs (Printing or Deleting Jobs on Hold)
  - Printing Saved Jobs
  - Deleting Saved Jobs
  - Moving Saved Jobs
- **Advanced Print Job Operations**
  - Saving Print Jobs Sent from Sources Other than Printer Driver
  - Printing without Saving Jobs in Common Box
  - Setting Passwords for Personal Boxes
  - Naming Personal Boxes
  - Displaying List of Saved Jobs
  - Printing List of Saved Jobs
  - Displaying Details of Saved Jobs
  - Renaming Saved Jobs
  - Printer Hard Disk Operations
  - Checking Free Hard Disk Space

Checking Print Job Information

Check print job details or print a specified job on the printer's hard disk using a web browser or operation panel.

- **Using web browser:**

  Log in to the printer using web browser.

  Changing Settings Using Web Browser

  After logging on to the printer, select **Job management** and perform operations.

- **Using operation panel:**

  Select **Job management** on the HOME screen and perform operations.

Basic Print Job Operations

- Using Printer Hard Disk
- Saving Print Jobs on Printer Hard Disk
- Managing Job Queue (Deleting or Preempting Other Jobs)
- Managing Pending Jobs (Printing or Deleting Jobs on Hold)
- Printing Saved Jobs
- Deleting Saved Jobs
- Moving Saved Jobs

Using Printer Hard Disk

The printer can save print jobs on the built-in hard disk.

Using print jobs stored on the printer enables you to print the jobs again as needed without using a computer.

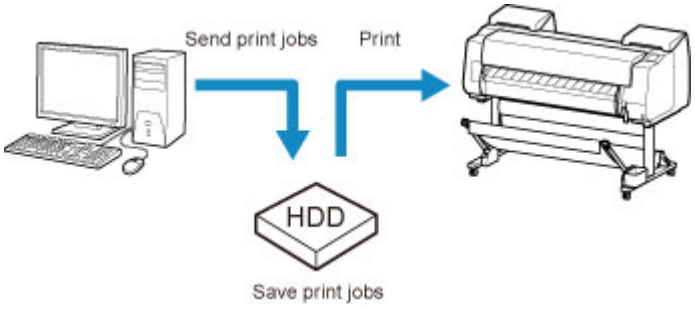

Saving print jobs offers the following benefits.

- **Save the time spent using a computer**

  When you send a print job to the printer, you can save it on the printer after printing or simply save it on the printer without printing it yet. Saved print jobs can be printed in the required quantity later without the need to use a computer again.

- **Simplify reprinting, if any errors occur**

  If errors occur in the middle of printing (as when paper runs out), you can resume printing after clearing the error without resending the print job from a computer.

- **Streamline printing work**

  Without using a computer, you can select print jobs and print in the desired quantity. You can also select multiple print jobs to print during the same period. This enables unattended operation at night, for example.

Output Method

To save print jobs on the printer's hard disk, configure the printer driver.

In Windows, this is set using the **Output Method** dialog box.

In Mac OS, this is set by selecting **Additional Settings** in the pop-up menu of the printer properties dialog.

Print

Perform printing while saving the print job on the temporary storage area of the printer's hard disk.

Save in Job Box

Save print jobs on the permanent storage area of the printer's hard disk. Selecting this does not start printing.

Print after reception is complete

This option is available in combination with **Print**. You can prevent degradation of print quality that occurs when receiving a print job is interrupted and printing is aborted in the middle.

Storage Destination

The storage area on the printer's hard disk is divided into a temporary storage area and a permanent storage area. The temporary storage area stores print jobs in the job queue or shared mailbox. The permanent storage area stores jobs in personal boxes.

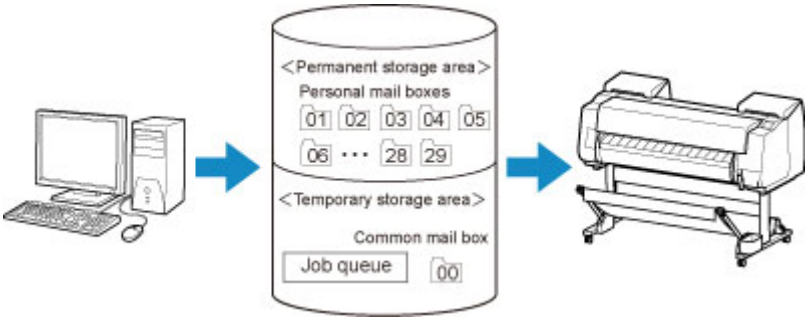

Job queue

The job queue refers to print jobs that are being processed by the printer (saved, received, prepared for processing, printed, deleted, or held). Up to 100 jobs can be stored in the temporary storage area.

However, the number of jobs available as queued jobs is up to 64.

Shared mailbox

Jobs for which you have specified **Print** in **Output Method** are saved in the shared mailbox and classified as saved jobs.

There is one shared mailbox, numbered "00". A password cannot be set for the shared mailbox.

Up to 100 print jobs can be saved here. However, they will be deleted one after another starting with the oldest job in the following situations.

- If there are over 101 jobs queued and saved in the shared mailbox combined
- If no more temporary storage space is available when jobs for which you have selected **Print** in **Output Method** are received
- If there is not enough space in the temporary or permanent storage area when jobs for which you have selected **Save in Job Box** in **Output Method** are received.

Personal boxes

Jobs are classified as saved jobs and saved in personal boxes in the following situations.

- When a saved job stored in the shared mailbox is moved to a personal box
- When you have selected Save in mail box as the option in **Output Method**

There are 29 personal boxes, numbered "01" to "29". You can specify a name and password for each personal box.

Up to 100 print jobs can be saved in all personal boxes combined.

Saving Print Jobs on Printer Hard Disk

To save print jobs on the printer's hard disk, configure the printer driver.

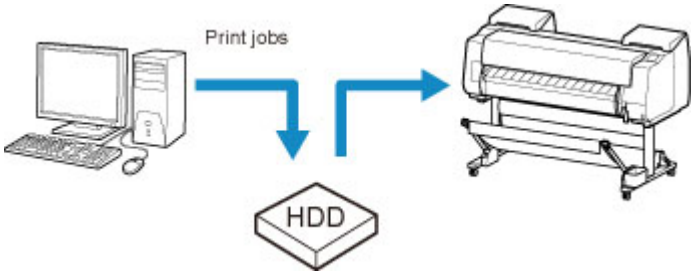

Configuring Printer Driver (Windows)

1. Open printer properties dialog box.

   How to Open the Printer Driver Setup Window

2. Access **Page Setup** sheet.

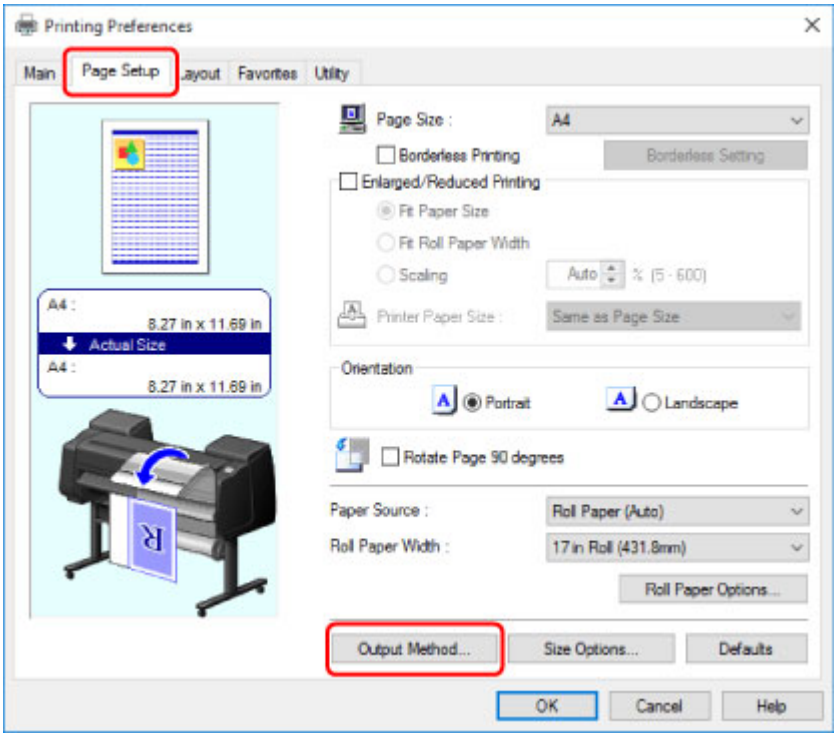

3. Click **Output Method** to display **Output Method** dialog box.

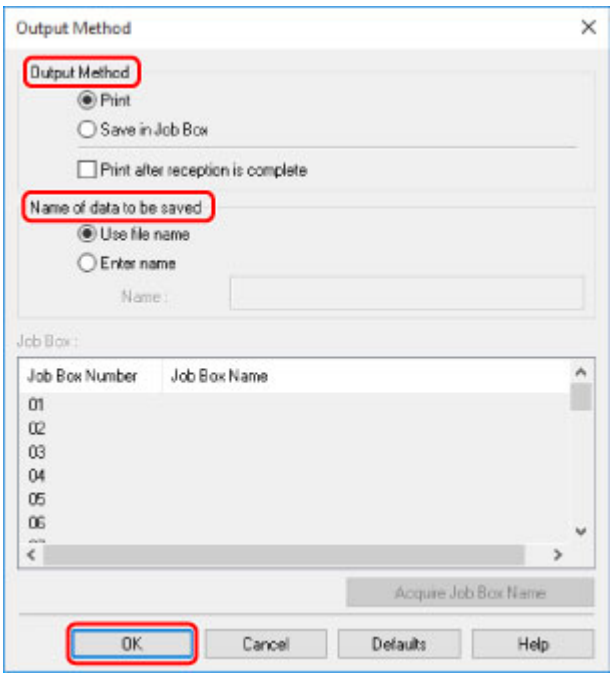

4. Make your selection in **Output Method**.

   Print

   Perform printing while saving the print job on the temporary storage area of the printer's hard disk.

   Save in Job Box

   Save print jobs on the permanent storage area of the printer's hard disk. Selecting this does not start printing.

   If you choose **Save in Job Box**, also specify the destination personal box in the **Job Box** list.

   Print after reception is complete

   This option is available in combination with **Print**. You can prevent degradation of print quality that occurs when receiving a print job is interrupted and printing is aborted in the middle.

   Note

   - Click **Acquire Job Box Name** to display personal box names in the **Job Box** list, as acquired from the printer.

5. In **Name of data to be saved**, specify how to name saved print jobs.

   To use the file name, select **Use file name**.

   Otherwise select **Enter name** and enter a name in **Name**.

6. Click **OK** to close **Output Method** dialog box.

Configuring Printer Driver (Mac OS)

1. Open printer properties dialog.

   How to Open the Printer Driver Setup Window

2. Select **Additional Settings** in pop-up menu.

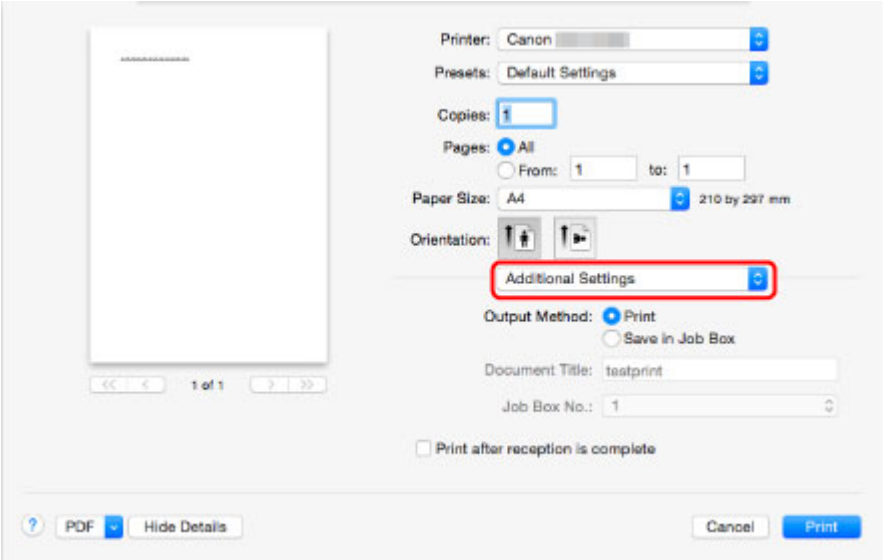

3. Make your selection in **Output Method**.

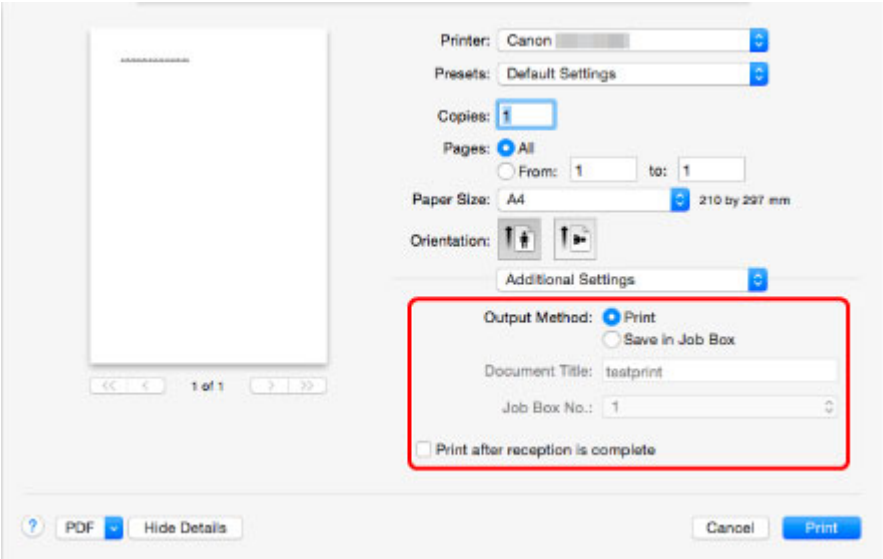

Print

Perform printing while saving the print job on the temporary storage area of the printer's hard disk.

Save in Job Box

Save print jobs on the permanent storage area of the printer's hard disk. Selecting this does not start printing.

If you select **Save in Job Box**, select the personal box number from **Job Box No.**.

Print after reception is complete

This option is available in combination with **Print**. You can prevent degradation of print quality that occurs when receiving a print job is interrupted and printing is aborted in the middle.

Managing Job Queue (Deleting or Preempting Other Jobs)

Print jobs being processed by the printer are collectively called the job queue. You can delete or preempt jobs in the job queue as needed.

This operation is available using the operation panel or Remote UI.

- Using Operation Panel
- Using Remote UI

- **Delete**

  Note that only jobs that are not currently being deleted can be deleted from the job queue.

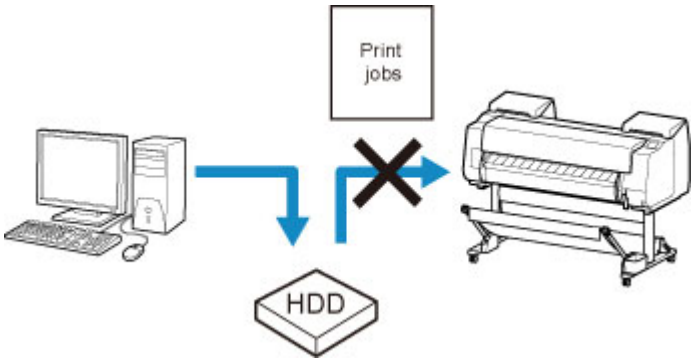

- **Preempting other jobs**

  You can preempt other jobs by printing jobs that are currently being received for processing first.

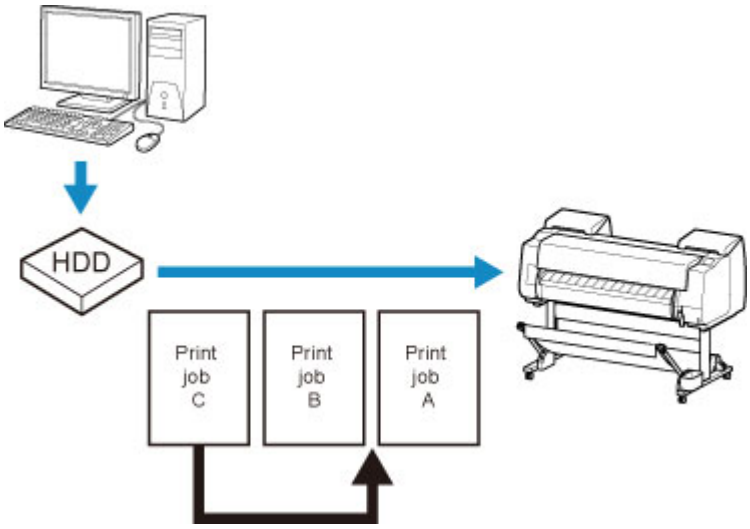

Note

- For information on managing jobs being held, see Managing Pending Jobs (Printing or Deleting Jobs on Hold).

Using Operation Panel

1. Make sure printer is turned on.

2. Flick HOME screen and tap **Job management**.

   Menu Operations

3. Tap **Print job**.

4. Tap data to delete or perform preempt printing.

   The screen below appears.

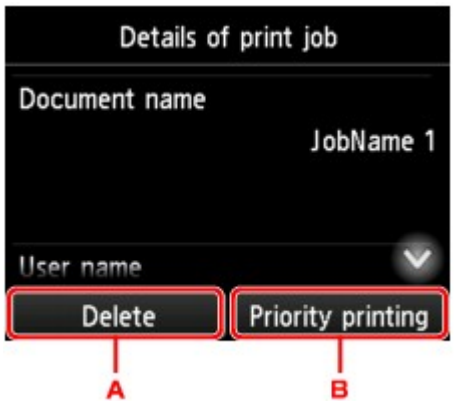

   A. Tap to delete data.

   B. Tap to perform preempt printing.

5. Check message that is displayed and tap **Yes**.

Using Remote UI

1. Display printer status on web browser.

2. On **Menu** page, select **Job management**.

3. Select **Print job**.

   The print job list appears.

4. Select print job and select **Delete** or **Prioritize**.

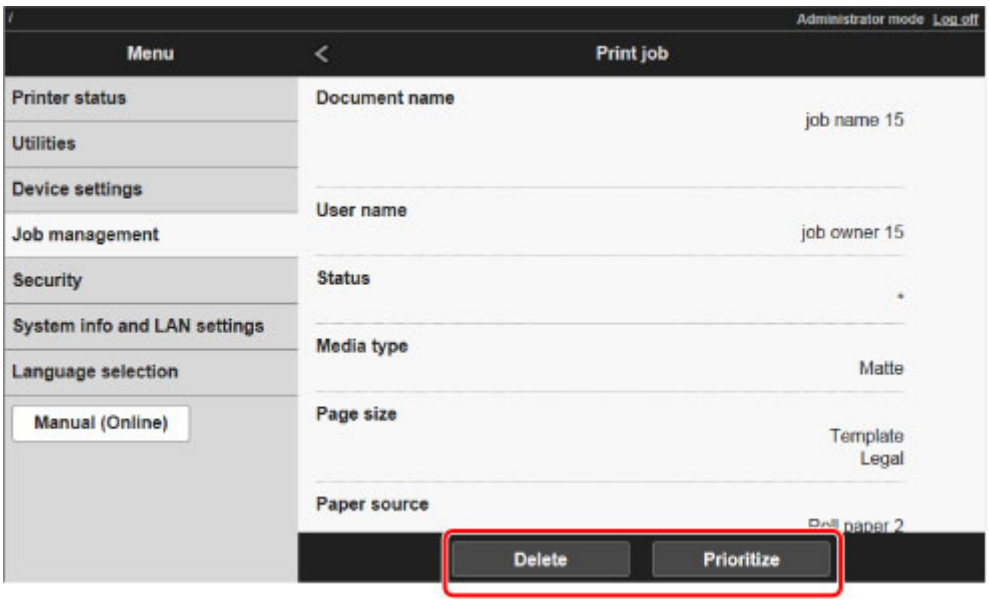
Administrator mode Log off
Menu
Print job
Printer status
Utilities
Device settings
Job management
Security
System info and LAN settings
Language selection
Manual (Online)
Document name
job name 15
User name
job owner 15
Status
Media type
Matte
Page size
Template
Legal
Paper source
Delete
Prioritize

Managing Pending Jobs (Printing or Deleting Jobs on Hold)

If the type or size of paper loaded does not match the settings in the print job received when you have set **Detect paper setting mismatch** to **Hold job** in the operation panel, the print job is held on the printer as a pending job in the job queue.

Manage held jobs such as these as follows.

This operation is available using the operation panel or Remote UI.

Note

- As long as you do not manage held jobs from the operation panel, they will remain in the job queue. In this case, the printer processes the next job in the queue without pausing.
- To print held jobs, replace the loaded paper with the paper specified in the print job.

  Loading the Upper Roll on the Printer
  Loading Sheets in the Printer

Using Operation Panel
Using Remote UI

Using Operation Panel

1. Make sure printer is turned on.

2. Flick HOME screen and tap **Job management**.

   Menu Operations

3. Tap **Print job**.

   The print job list appears.

4. Tap print job with icon on left.

   The screen below appears.

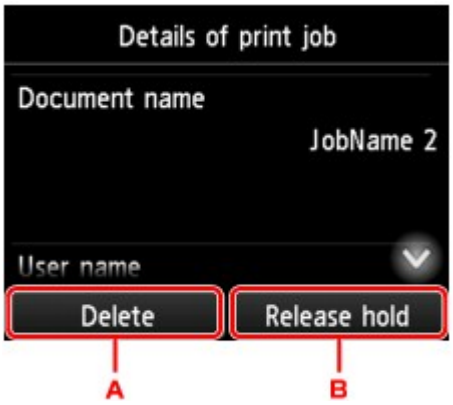

A. Tap to delete data.

B. Tap to release hold.

5. Check message that is displayed and tap **Yes**.

Using Remote UI

1. Display printer status on web browser.

2. On **Menu** page, select **Job management**.

3. Select **Print job**.

   The print job list appears.

4. Select print job with icon on left and select **Delete** or **Release**.

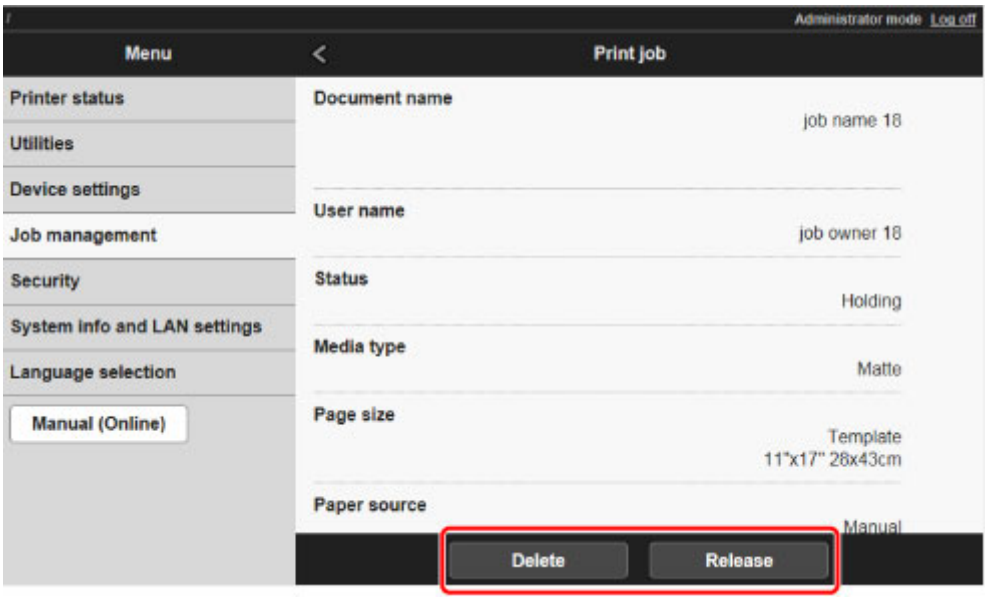

Printing Saved Jobs

Print saved print jobs stored on the printer's hard disk as follows.

This operation is available using the operation panel or Remote UI.

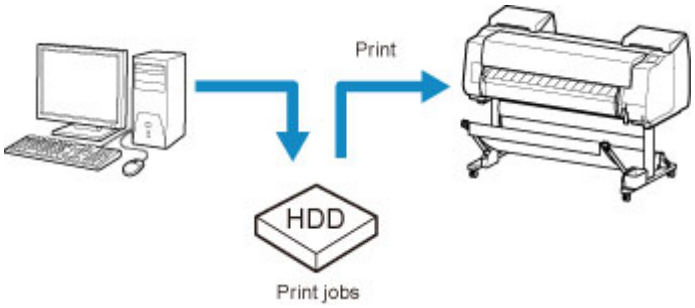

- Using Operation Panel
- Using Remote UI

Using Operation Panel

1. Make sure printer is turned on.

2. Flick HOME screen and tap **Job management**.

   - Menu Operations

3. Tap **Saved job**.

   The **Job box list** screen appears.

4. Tap box.

   Note

   - Enter the password if it is enabled.

5. Tap **Job list**.

6. Tap job to print.

7. Tap **Start print** on displayed screen.

   The screen below appears.

A. Tap to display the screen below. Specify the number of copies.

8. Tap **Start print**.

Using Remote UI

1. Display printer status on web browser.

2. On **Menu** page, select **Job management**.

3. Select **Saved job**.

   The saved job list appears.

4. On **Saved job** page, select box.

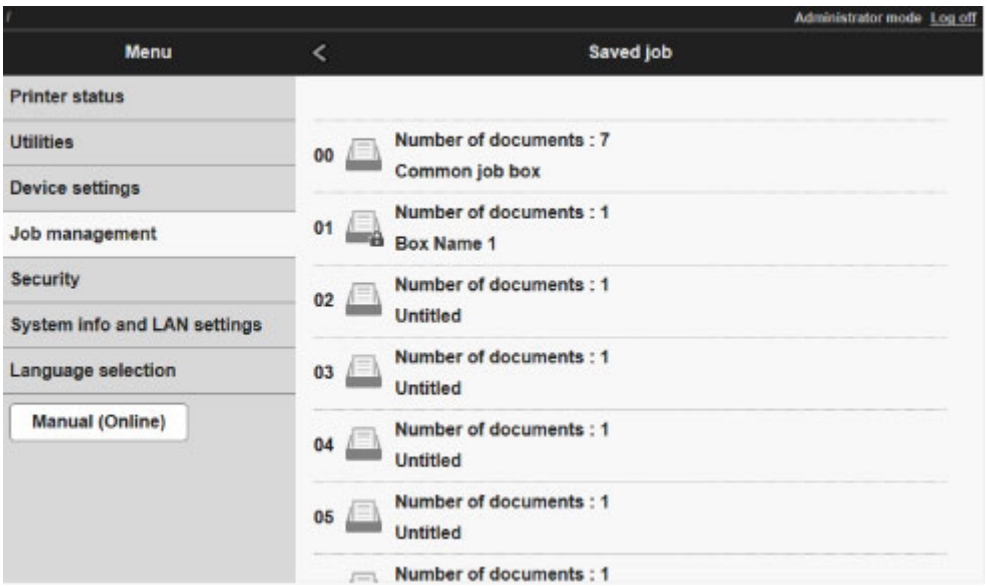

Note

- Enter the password if it is enabled for a saving box.

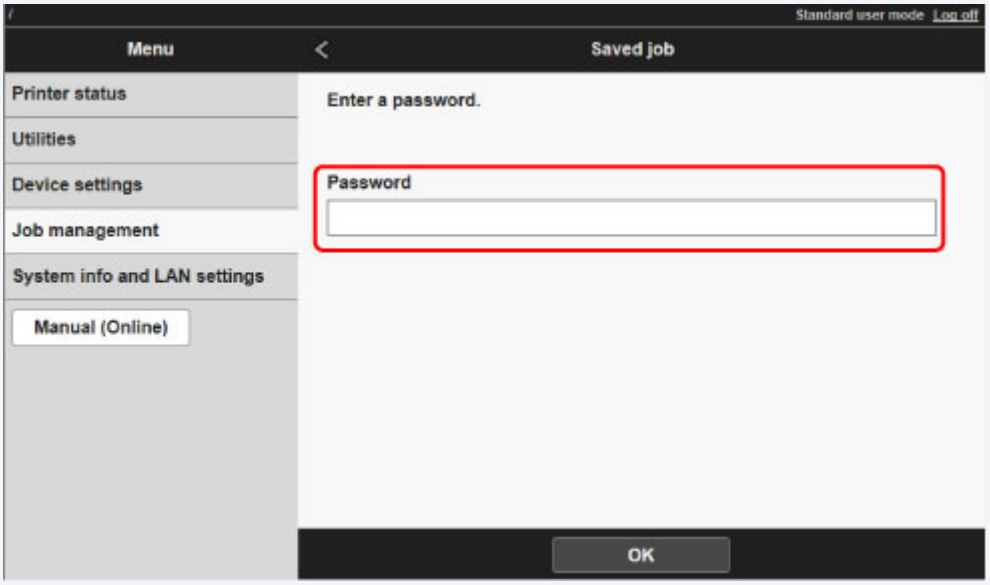

5. Select saved job and select **Print**.

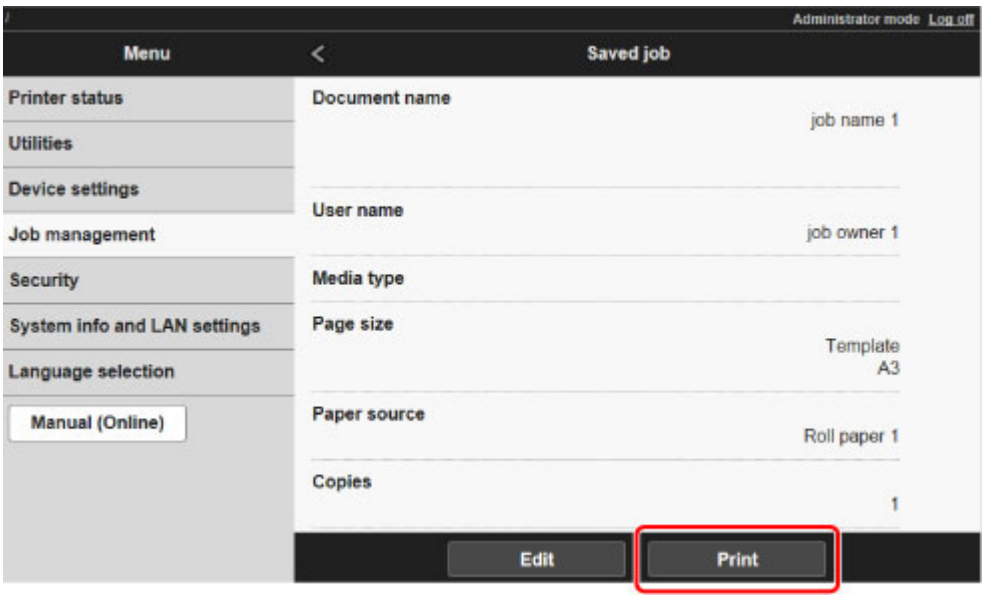

6. Enter quantity to print in **Copies** and select **Yes**.

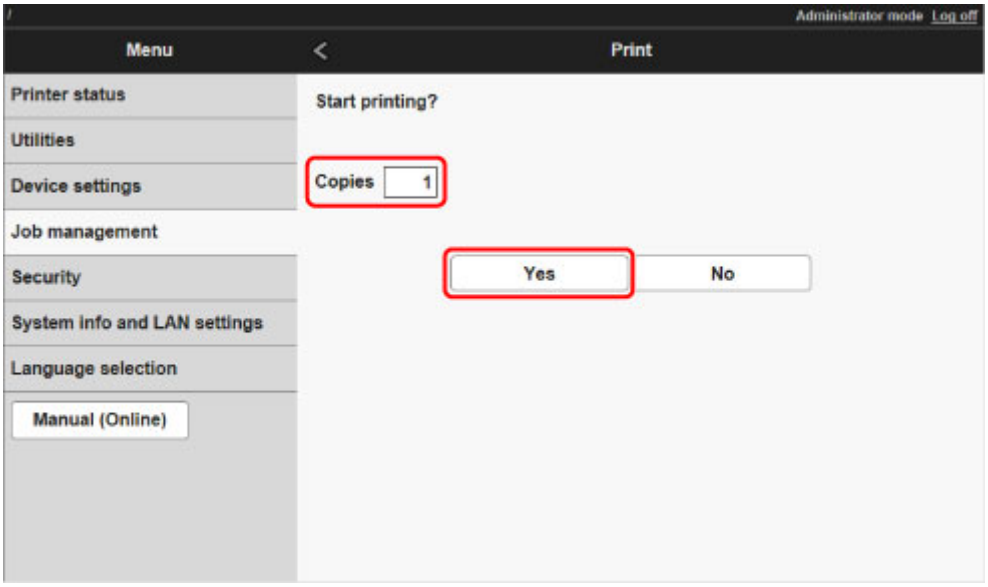

Deleting Saved Jobs

Delete saved print jobs stored on the printer's hard disk as follows.

This operation is available using the operation panel or Remote UI.

- Using Operation Panel
- Using Remote UI

Using Operation Panel

1. Make sure printer is turned on.

2. Flick HOME screen and tap **Job management**.

   - Menu Operations

3. Tap **Saved job**.

   The **Job box list** screen appears.

4. Tap box.

   Note

   - Enter the password if it is enabled.

5. Tap **Job list**.

6. Tap job to delete.

7. Tap **Delete**.

8. Tap **Yes** on displayed screen.

Using Remote UI

1. Display printer status on web browser.

2. On **Menu** page, select **Job management**.

3. Select **Saved job**.

   The saved job list appears.

4. On **Saved job** page, select box.

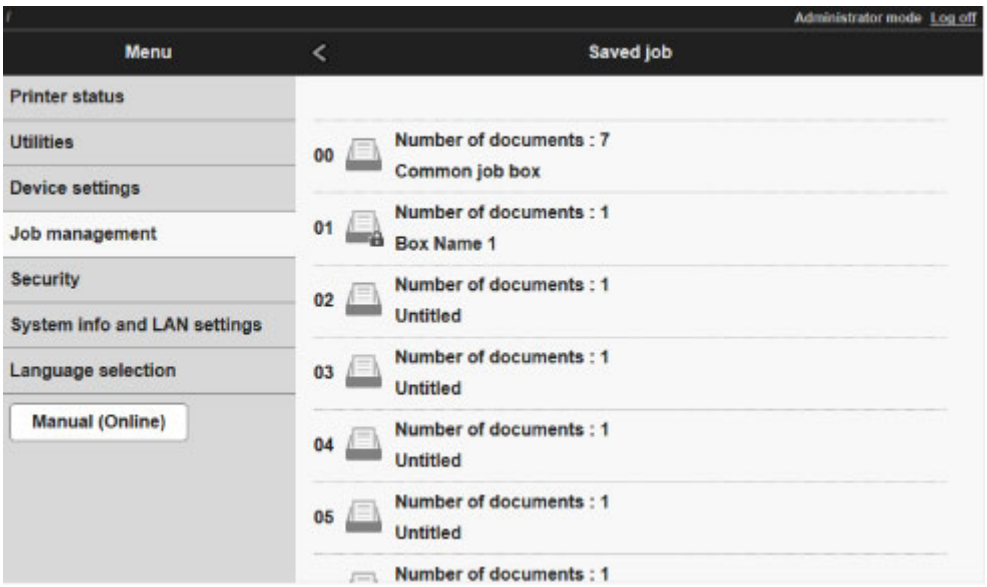

Note

- Enter the password if it is enabled for a saving box.

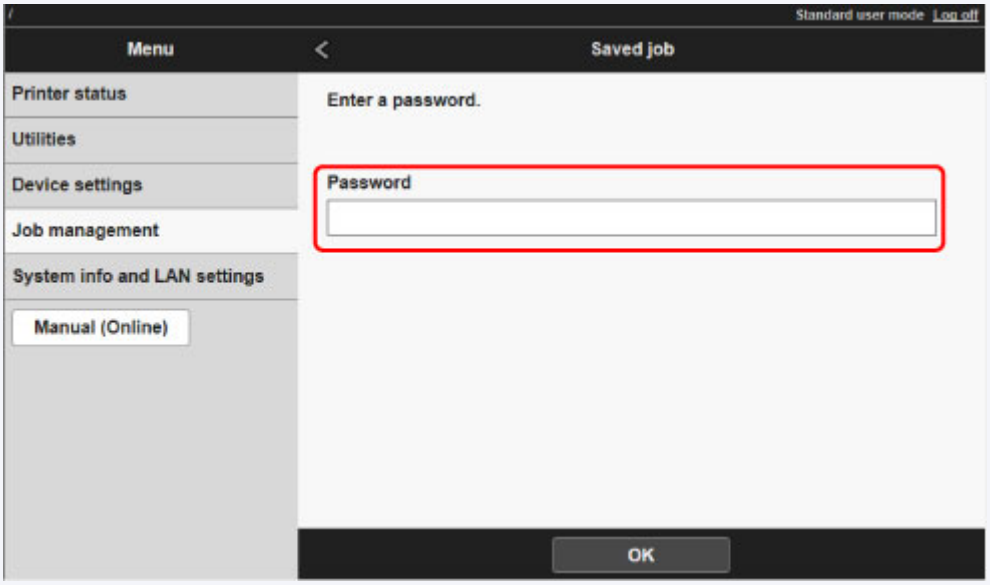

5. Select saved job and select **Edit**.

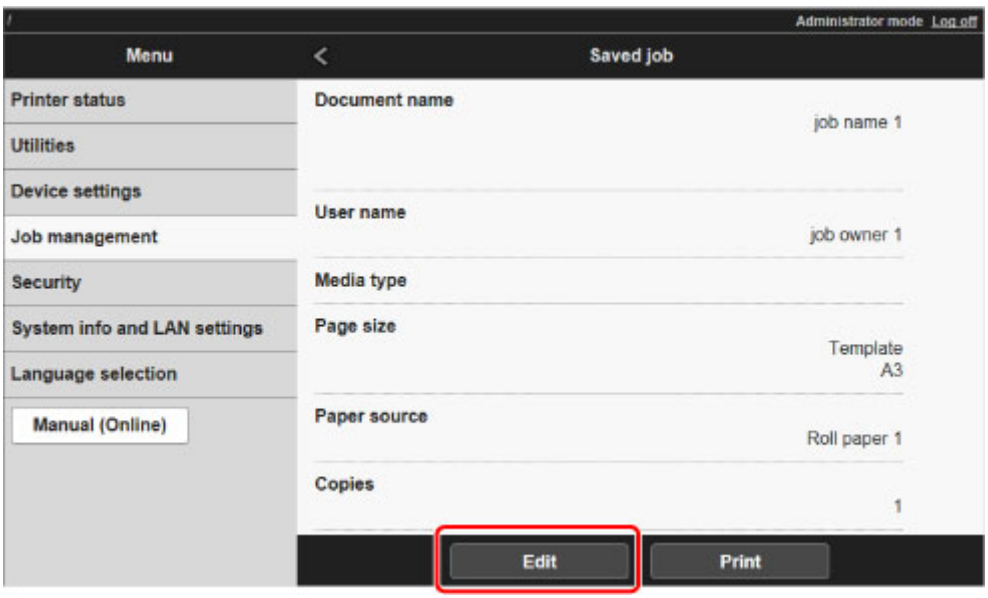

6. Select **Delete** on displayed screen.

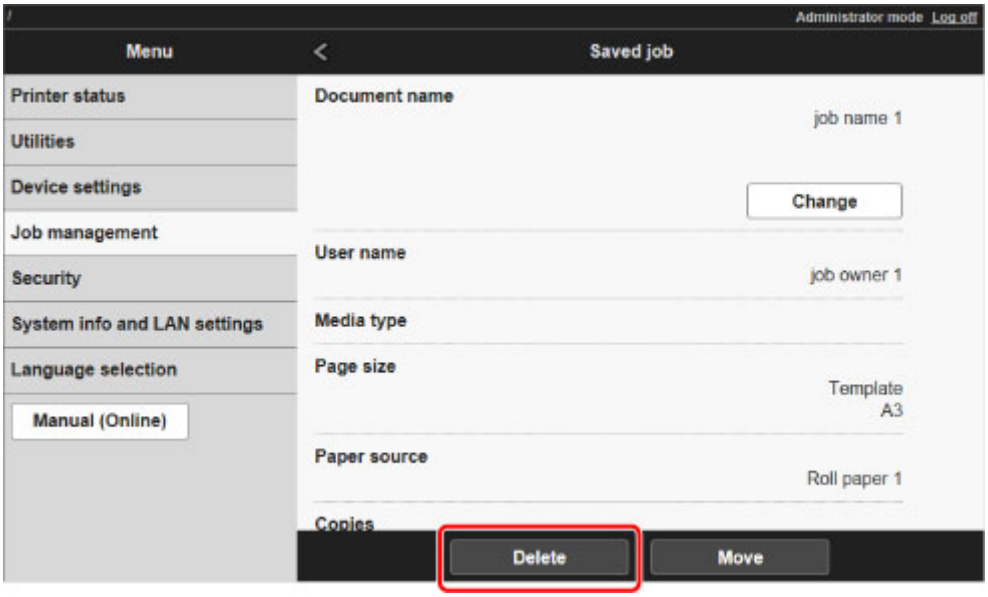

Moving Saved Jobs

Print jobs stored on the printer's hard disk (saved jobs) can be moved from the current box to another box as follows.

However, jobs saved in personal boxes cannot be moved to the shared mailbox.

This operation is available using Remote UI.

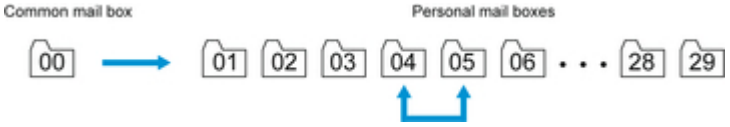

Important

- Jobs stored in the shared mailbox may be automatically deleted under some conditions. To prevent jobs from being deleted, move them from the shared mailbox to personal boxes.

  Using Printer Hard Disk

1. Display printer status on web browser.

2. On **Menu** page, select **Job management**.

3. Select **Saved job**.

   The saved job list appears.

4. On **Saved job** page, select box.

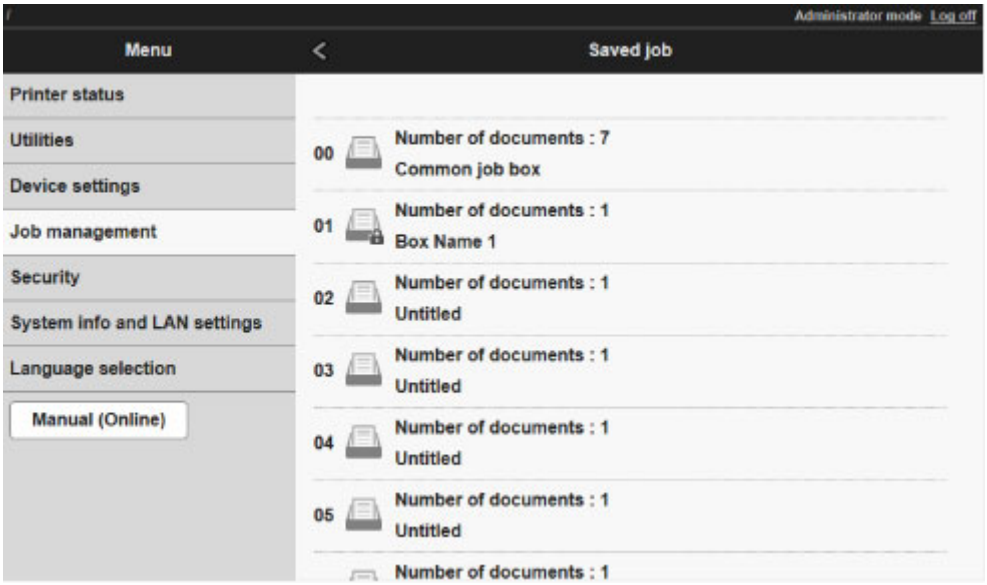

Note

- Enter the password if it is enabled for a saving box.

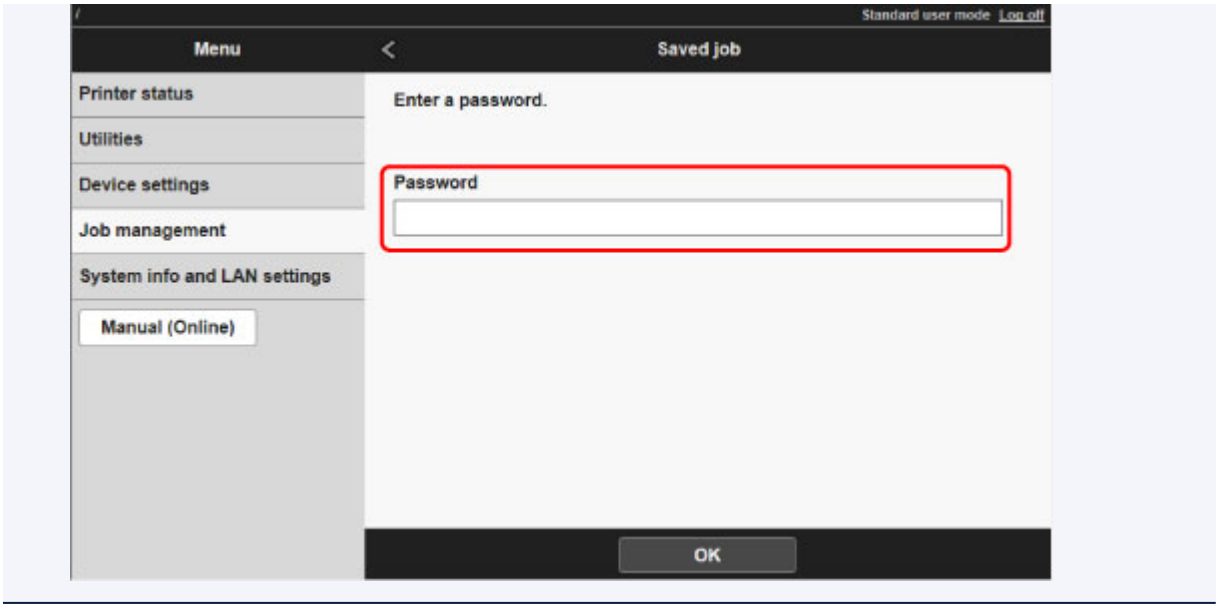

5. Select saved job and select **Edit**.

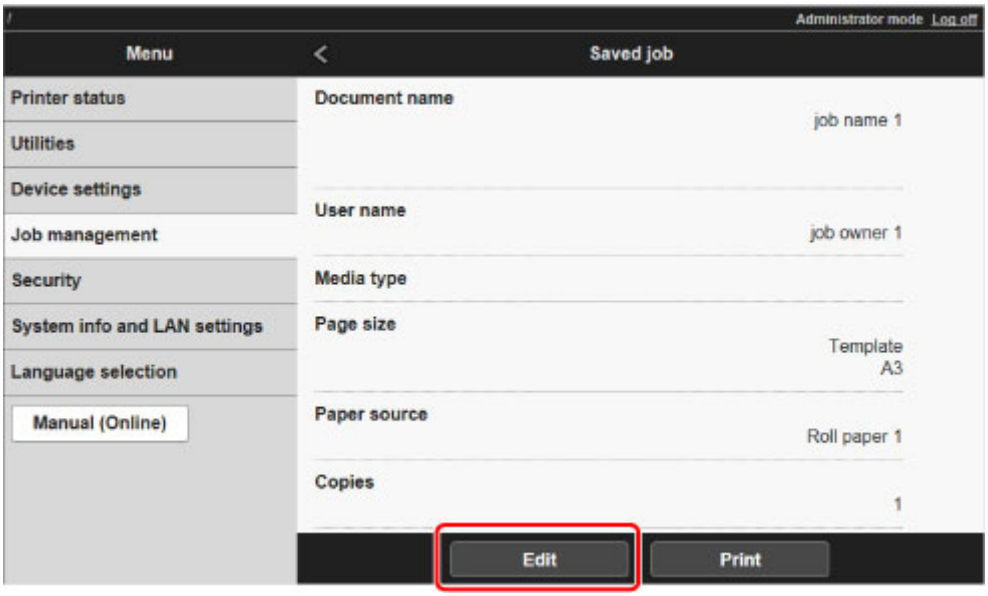

6. Select **Move** on displayed screen.

7. On **Move job** page, select **Destination job box**.

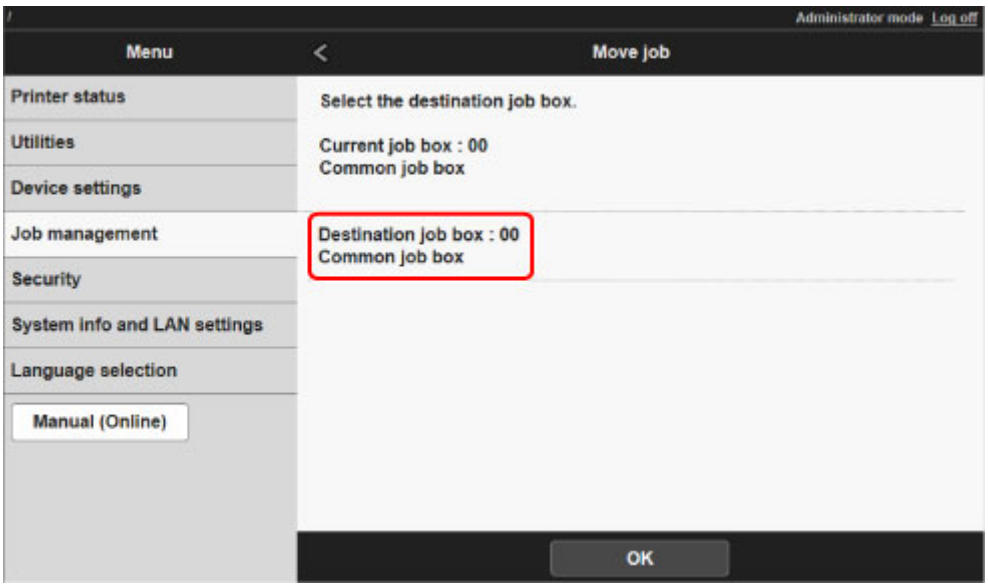

8. Select name or number of destination personal box in **Destination job box** list and select **OK** on displayed screen.

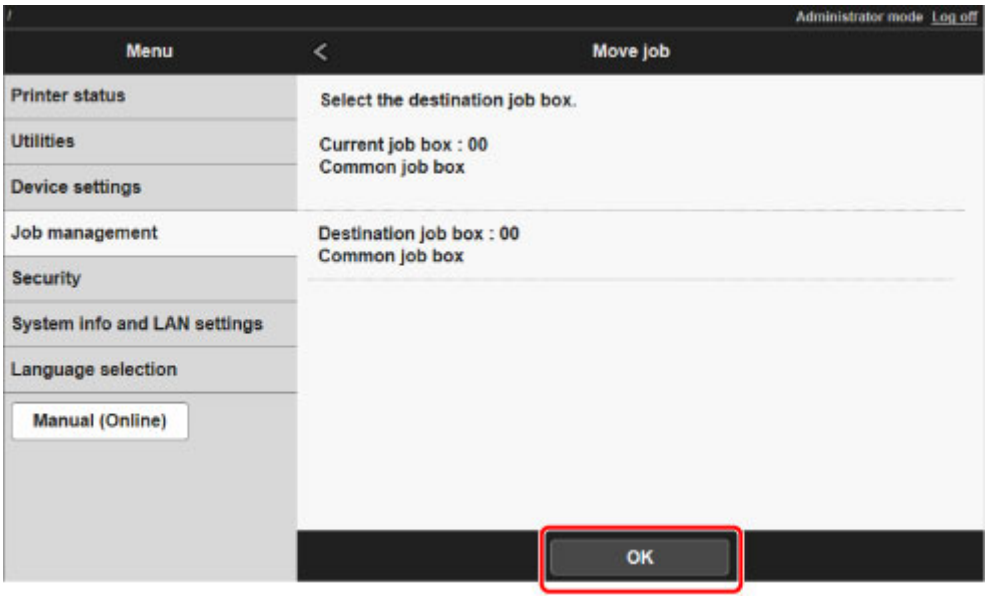

Advanced Print Job Operations

- Saving Print Jobs Sent from Sources Other than Printer Driver
- Printing without Saving Jobs in Common Box
- Setting Passwords for Personal Boxes
- Naming Personal Boxes
- Displaying List of Saved Jobs
- Printing List of Saved Jobs
- Displaying Details of Saved Jobs
- Renaming Saved Jobs
- Printer Hard Disk Operations
- Checking Free Hard Disk Space

Saving Print Jobs Sent from Sources Other than Printer Driver

To save print jobs sent from software or systems other than the printer driver or applications provided with the printer, specify the output method and select the setting to perform printing after saving printing data using the operation panel.

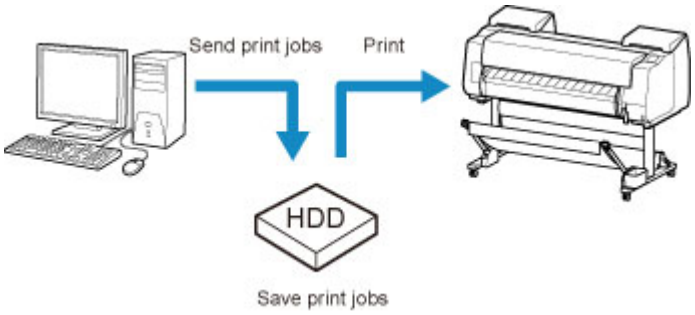

Note

- Contact the software or system developer for information about support for this printer function.

Important

- The administrator password is required to change settings if it is enabled for changing settings using the operation panel.

- Specifying Output Method
- Printing after Saving Printing Data

Specifying Output Method

Perform settings for printing or saving print job.

1. Make sure printer is turned on.

2. Flick HOME screen and tap **Device settings**.

   - Menu Operations

3. Tap **Hard disk settings**.

4. Enter administrator password if it is enabled.

5. Tap **Output method**.

   Select the method below.

   Print

   Save print jobs automatically at the same time they are printed. (This is the default format.)

   Print (auto delete)

   Save print jobs temporarily at the same time they are printed and delete them after printing.

Save to job box

Save print jobs on the printer.

Printing after Saving Printing Data

To save print jobs on the hard disk before printing, select **ON** for **Save first and print**.

Printing will start when **Save first and print** is set to **ON**, even if you have selected **Save to job box** for **Output method**.

1. Make sure printer is turned on.

2. Flick HOME screen and tap **Device settings**.

   Menu Operations

3. Tap **Hard disk settings**.

4. Enter administrator password if it is enabled.

5. Tap **Save first and print**.

6. Tap **ON**.

Printing without Saving Jobs in Common Box

Jobs sent from a computer for which you have selected **Print** in **Output Method** in the printer driver are saved in the shared mailbox.

Using Printer Hard Disk

When **Common job box setting** is set to **Print (auto delete)** in the operation panel menu, print jobs for which you have selected **Print** in **Output Method** in the printer driver are deleted from the shared mailbox after printing.

Use this function when printing highly confidential documents.

Important

- The administrator password is required to change settings if it is enabled for changing settings using the operation panel.

1. Make sure printer is turned on.

2. Flick HOME screen and tap **Device settings**.

   Menu Operations

3. Tap **Hard disk settings**.

4. Enter administrator password if it is enabled.

5. Tap **Common job box setting**.

6. Tap **Print (auto delete)**.

Setting Passwords for Personal Boxes

For greater security, you can specify a password for personal boxes. After you set a password, it will be required to modify the personal box settings, as well as to display, print, delete, move, and modify jobs saved in the personal box.

This operation is available using Remote UI.

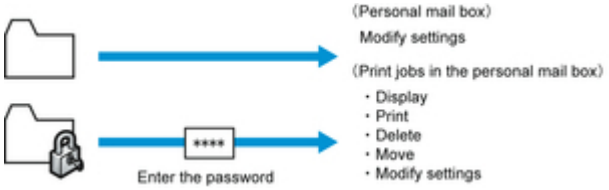

Note

- By default, no passwords are set for personal boxes.
- A password cannot be set for the shared mailbox.
- Enter a four-digit number as the password, in the range 0001?9999.
- Even if you have set passwords, they are not required to access personal boxes in Administrator Mode in Remote UI.

1. Display printer status on web browser.

2. On **Menu** page, select **Job management**.

3. Select **Saved job**.

   The saved job list appears.

4. On **Saved job** page, select box.

5. Select **Edit**.

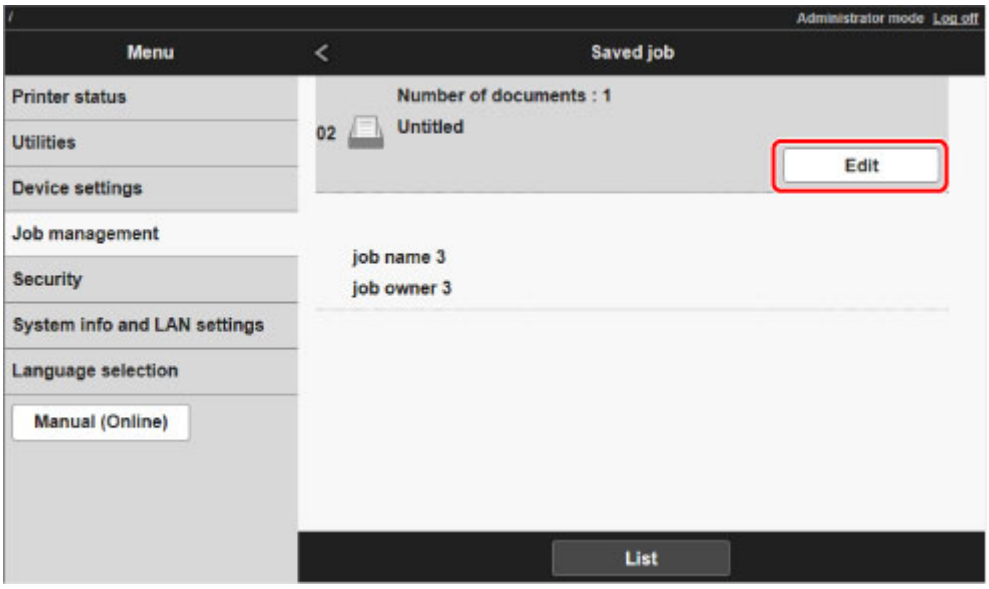

6. In **Edit job box** dialog box, specify password.

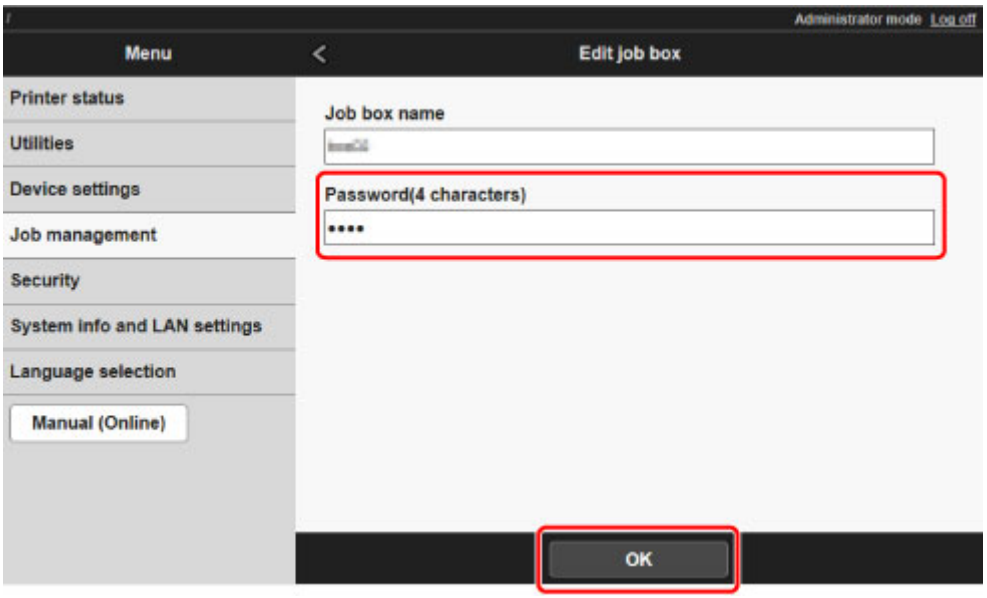

7. Enter password. (This field is limited to four digits in the range 0001 to 9999.)

8. Select **OK**.

Naming Personal Boxes

For easier identification, you can assign names to personal boxes.

This operation is available using Remote UI.

1. Display printer status on web browser.

2. On **Menu** page, select **Job management**.

3. Select **Saved job**.

   The saved job list appears.

4. On **Saved job** page, select box.

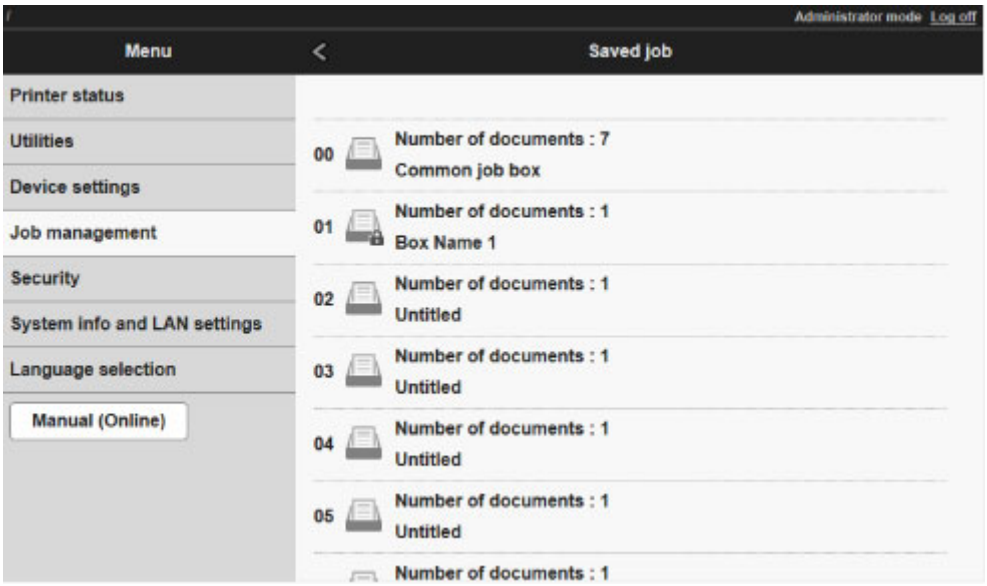

Note

- Enter the password if it is enabled for a saving box.

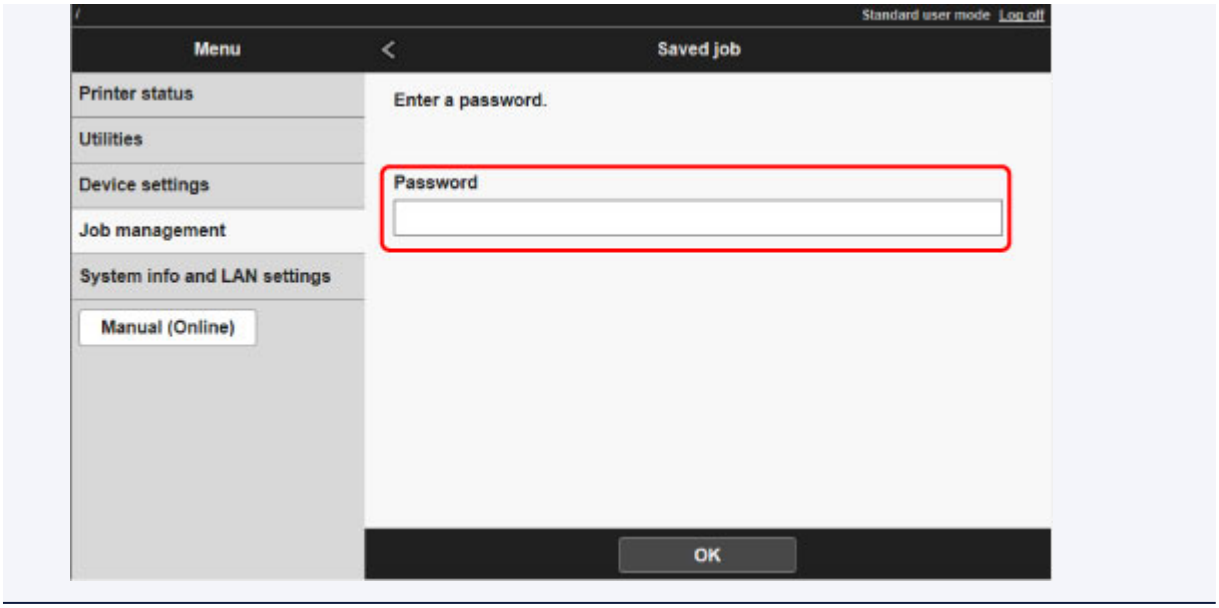

5. Select **Edit**.

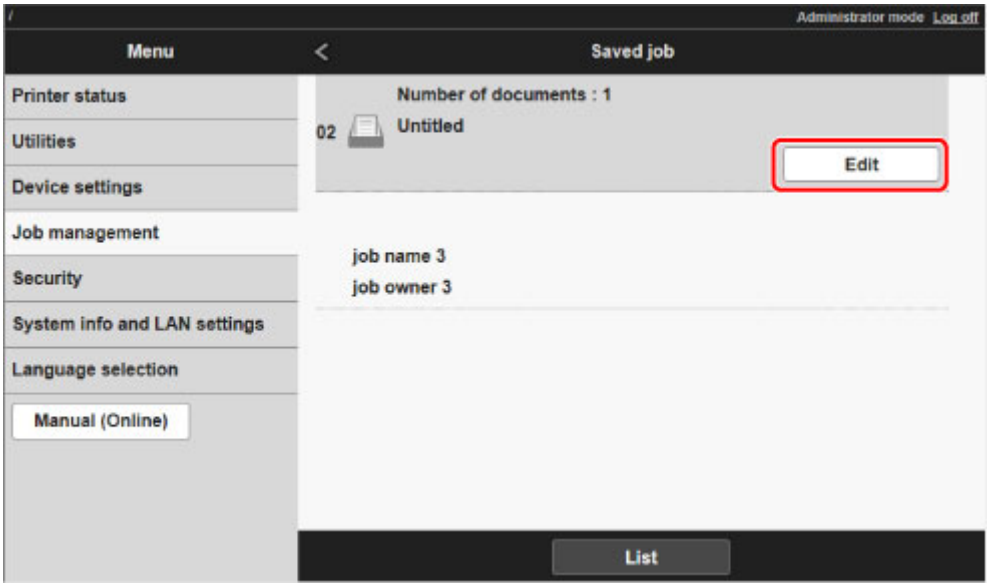

6. In **Edit job box** dialog box, enter name in **Job box name** and select **OK**.

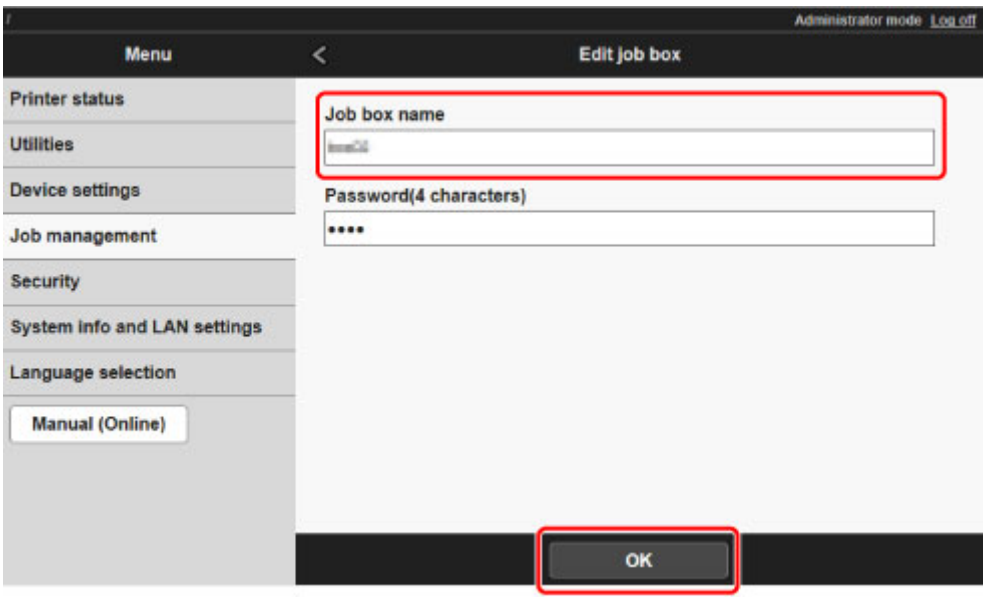
Administrator mode Log off
Menu
Edit job box
Printer status
Utilities
Device settings
Job management
Security
System info and LAN settings
Language selection
Manual (Online)
Job box name
Password(4 characters)
OK

Displaying List of Saved Jobs

Print jobs stored on the printer's hard disk (saved jobs) can be listed by box as follows.

This operation is available using the operation panel or Remote UI.

- Using Operation Panel
- Using Remote UI

Using Operation Panel

1. Make sure printer is turned on.

2. Flick HOME screen and tap **Job management**.

   - Menu Operations

3. Tap **Saved job**.

   The **Job box list** screen appears.

4. Tap box.

   Note

   - Enter the password if it is enabled.

5. Tap **Job list**.

   Saved job list for each box appears.

Using Remote UI

1. Display printer status on web browser.

2. On **Menu** page, select **Job management**.

3. Select **Saved job**.

   The saved job list appears.

4. On **Saved job** page, select box.

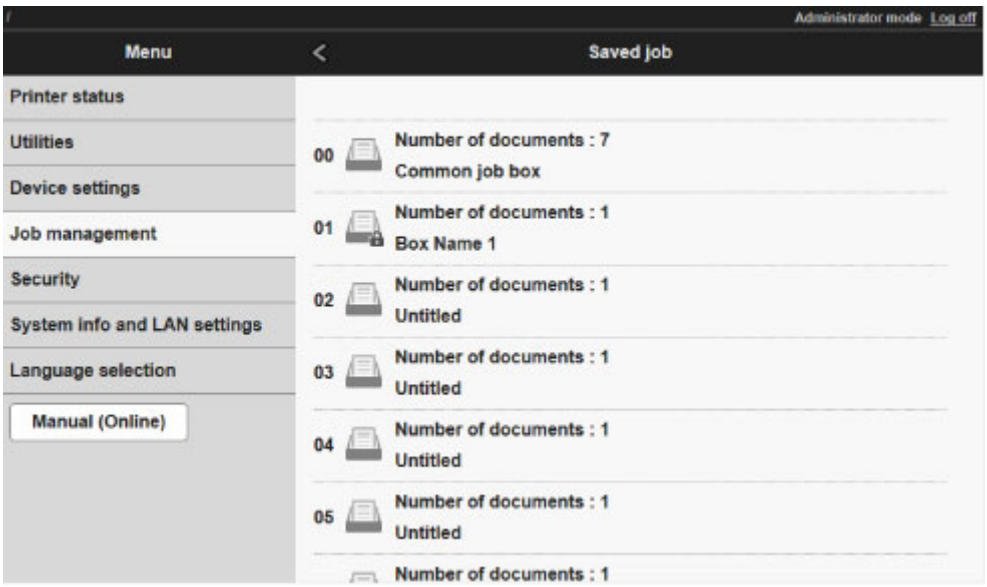

Note

- Enter the password if it is enabled for a saving box.

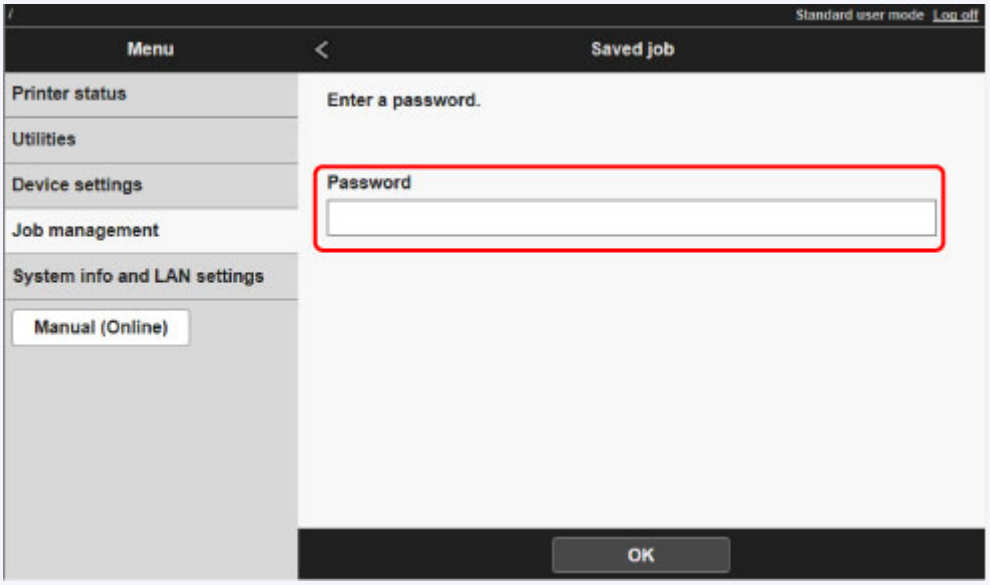

Jobs saved in the box are listed.

Printing List of Saved Jobs

The list of print jobs stored on the printer's hard disk (saved jobs) can be printed by box as follows.

This operation is available using the operation panel.

1. Make sure printer is turned on.

2. Flick HOME screen and tap **Job management**.

   Menu Operations

3. Tap **Saved job**.

   The **Job box list** screen appears.

4. Tap box.

   Note

   - Enter the password if it is enabled.

5. Tap **Job list**.

6. Tap **Print the job list**.

   Saved job list for each box appears.

Displaying Details of Saved Jobs

Details of print jobs stored on the printer's hard disk (saved jobs) can be displayed as follows.

This operation is available using the operation panel or Remote UI.

- Using Operation Panel
- Using Remote UI

Using Operation Panel

1. Make sure printer is turned on.

2. Flick HOME screen and tap **Job management**.

   - Menu Operations

3. Tap **Saved job**.

   The **Job box list** screen appears.

4. Tap box.

   Note

   - Enter the password if it is enabled.

5. Tap **Job list**.

   Saved job list for each box appears.

6. Tap print job.

   The print job details appears.

Using Remote UI

1. Display printer status on web browser.

2. On **Menu** page, select **Job management**.

3. Select **Saved job**.

   The saved job list appears.

4. On **Saved job** page, select box.

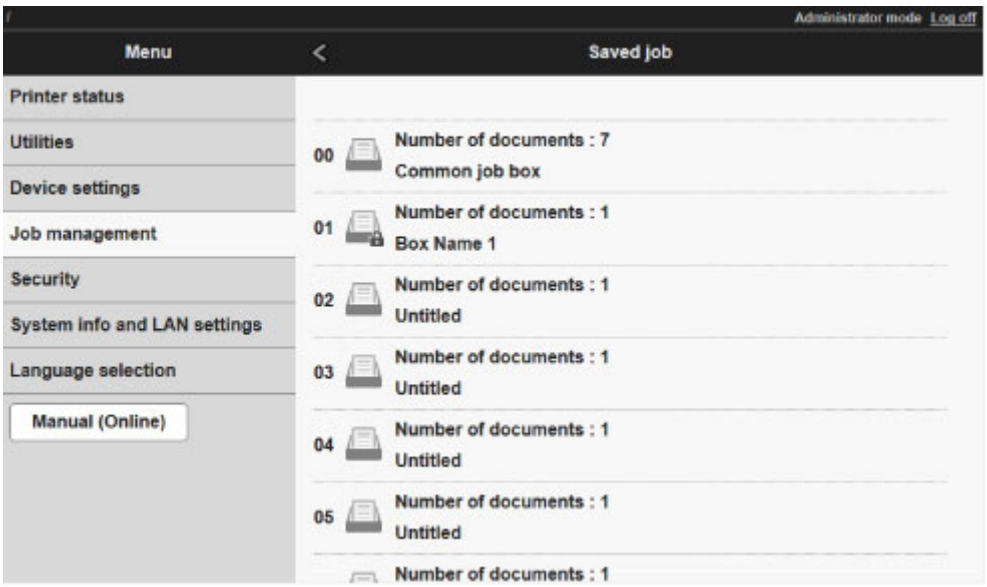

Note

- Enter the password if it is enabled for a saving box.

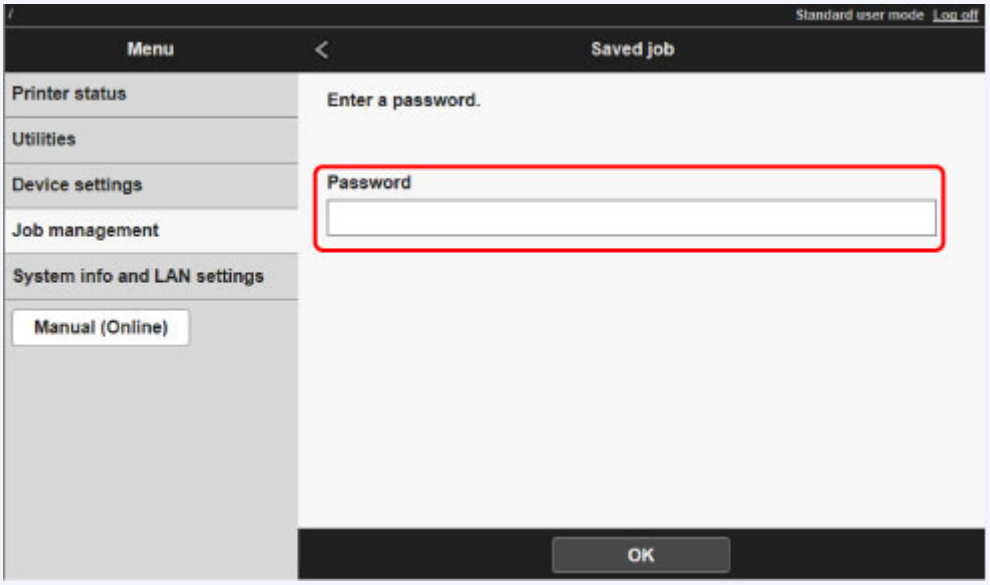

5. Select print job.

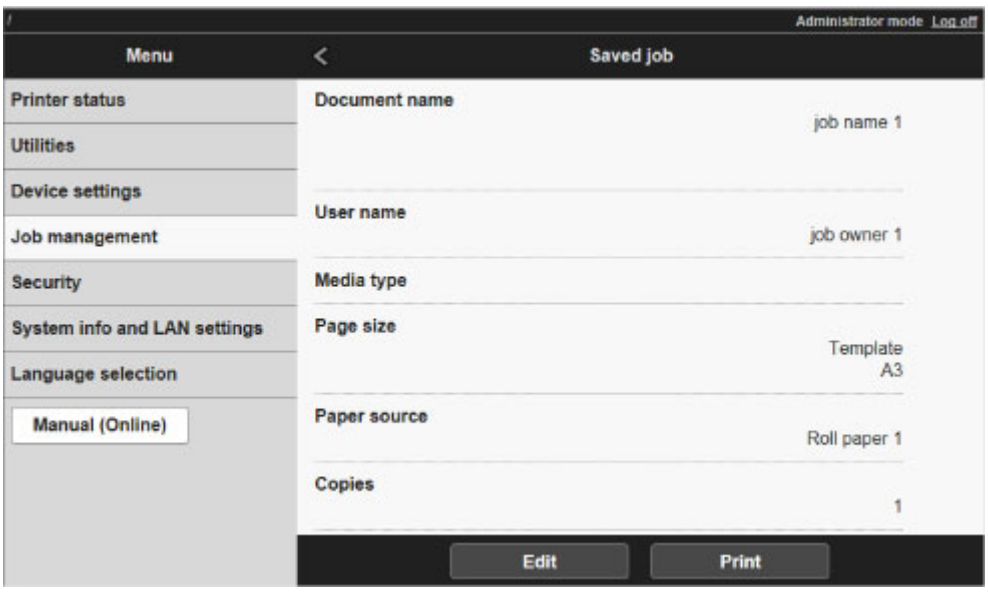

The details of the saved document appears.

Renaming Saved Jobs

Print jobs stored on the printer's hard disk (saved jobs) can be renamed as follows.

This operation is available using Remote UI.

1. Display printer status on web browser.

2. On **Menu** page, select **Job management**.

3. Select **Saved job**.

   The saved job list appears.

4. On **Saved job** page, select box.

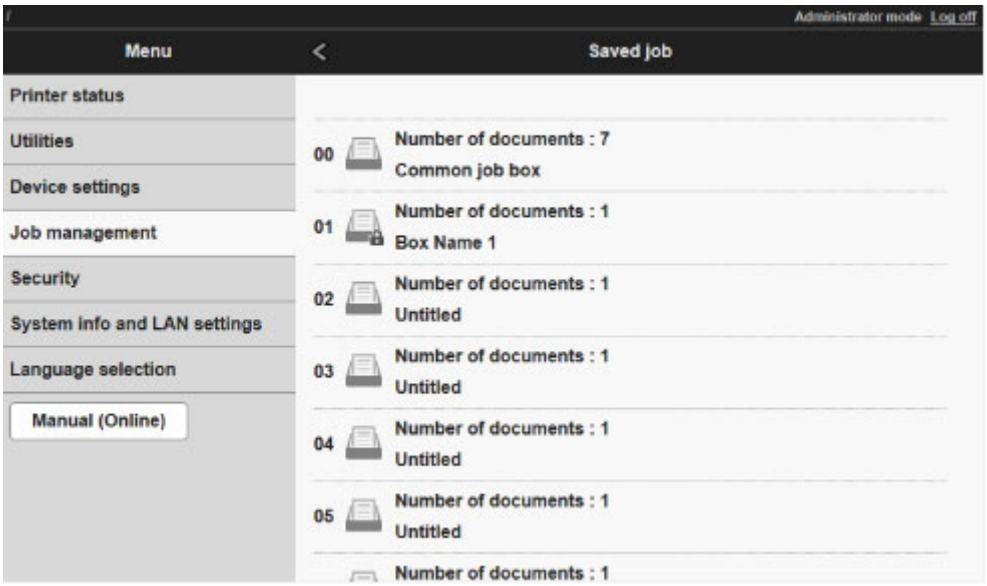

Note

- Enter the password if it is enabled for a saving box.

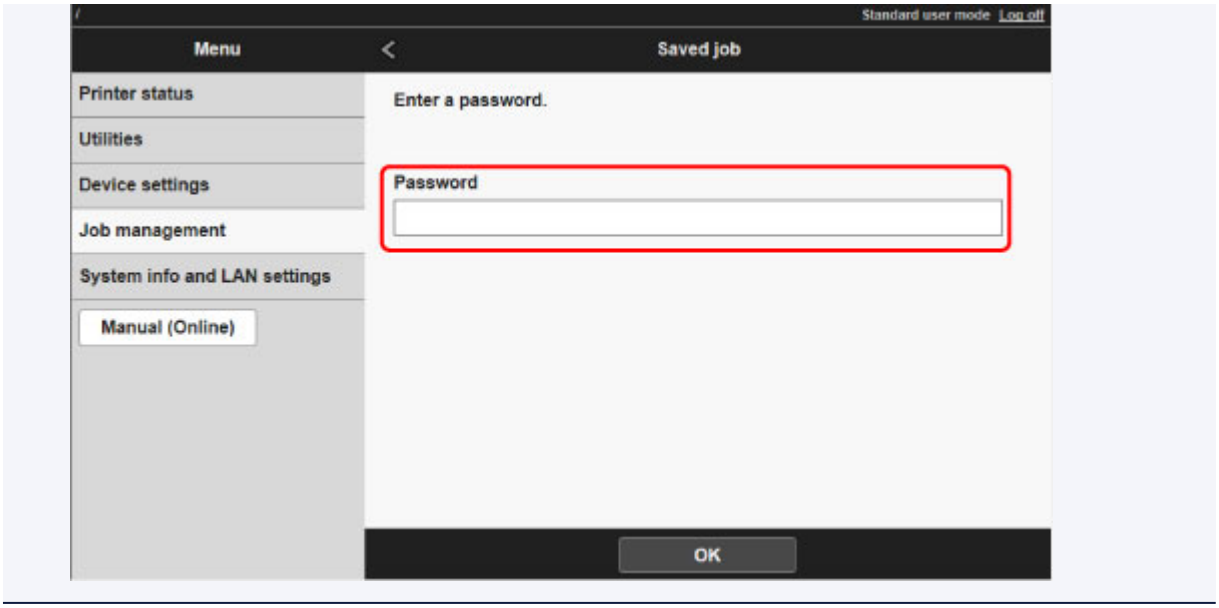

5. Select saved job and select **Edit**.

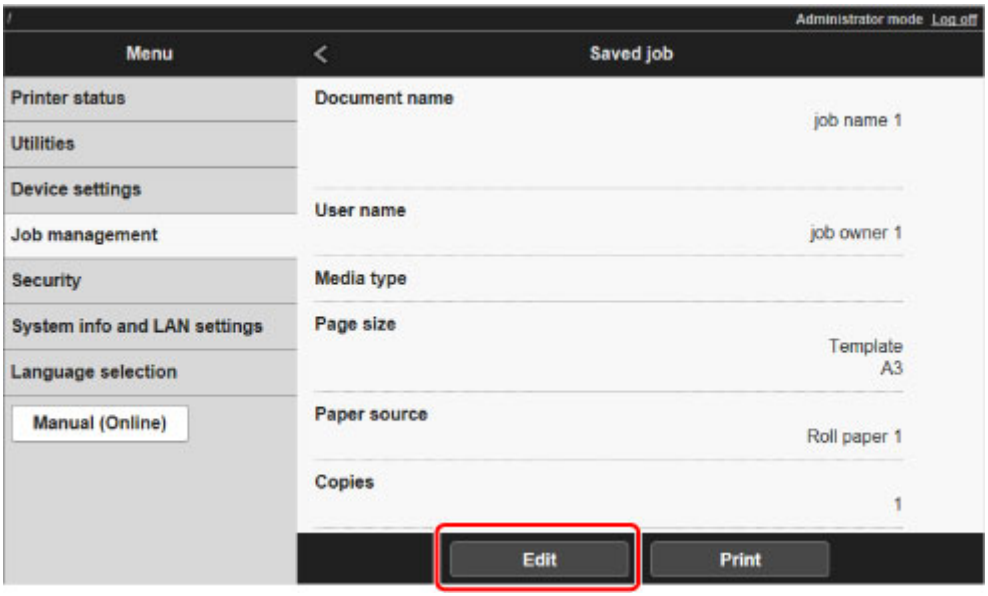

6. Select **Change**.

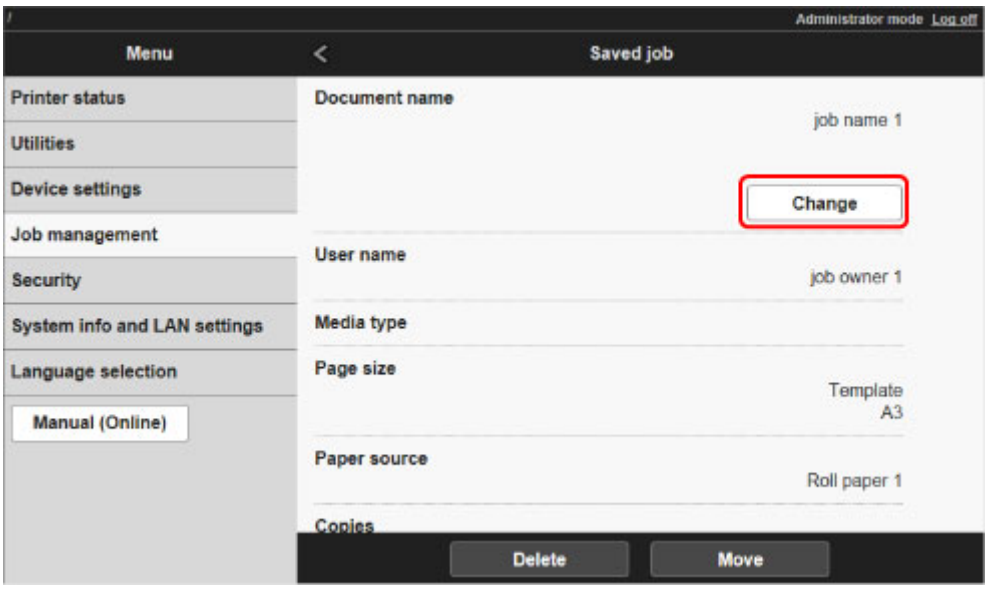

7. Enter name and select **OK**.

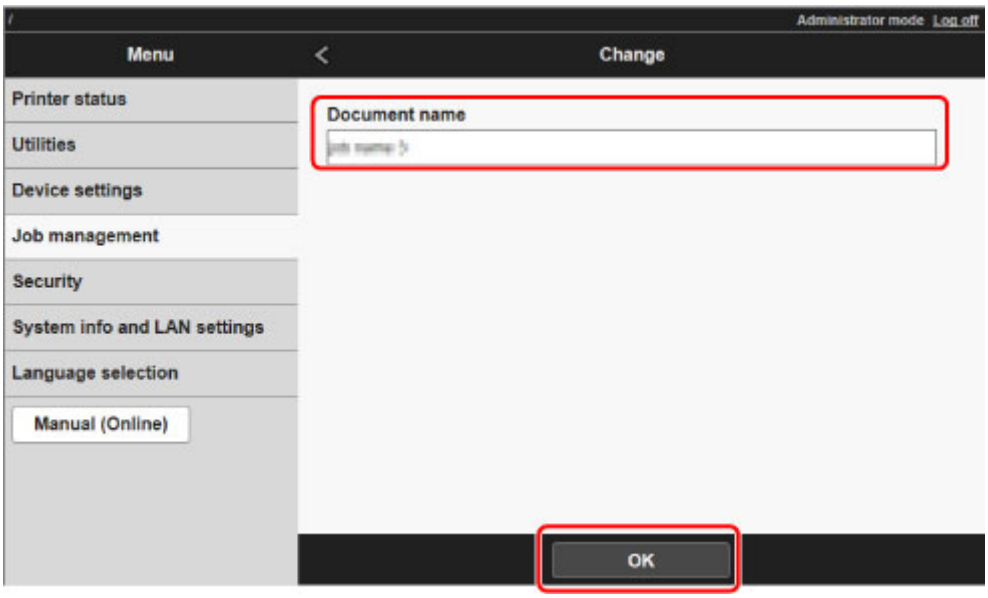

Printer Hard Disk Operations

Printer hard disk operations are available from the following programs and interfaces.

- **Printer driver**
- **Remote UI**
- **Operation panel**

The hard disk operations available through each interface are as follows.

Operation		**Printer driver**	**Remote UI**	**Operation panel**
Saving print jobs	Save in mail box	✓	-	-
	Do not save print jobs in the common box	-	-	✓
	Save print jobs sent from sources other than the printer driver	-	-	✓
Operations with saved jobs	Print saved jobs	-	✓	✓
	Delete saved jobs	-	✓	✓
Job queue management	Display job queue	-	✓	✓
	Delete	-	✓	✓
	Preempt jobs	-	✓	✓
	Operations with held jobs	-	✓	✓
Mail box management	Move saved jobs	-	✓	-
	Modify saved jobs	-	✓	-
	Modify mail boxes	-	✓	-
	Print a list of saved jobs	-	-	✓
	Display a list of saved jobs	-	✓	✓
Other operations	Display free hard disk space	-	✓	✓
	Initialize hard disk	-	-	✓
	Display the time of printing	-	✓	✓
Display error messages		-	✓	✓

Checking Free Hard Disk Space

Check the space available on the printer's hard disk as follows.

This operation is available using the operation panel or Remote UI.

- Using Operation Panel
- Using Remote UI

Using Operation Panel

1. Make sure printer is turned on.

2. Flick HOME screen and tap **Printer information**.

   - Menu Operations

3. Tap **Hard disk information**.

   The free hard disk space appears.

Using Remote UI

1. Display printer status on web browser.

2. On **Menu** page, select **Job management**.

3. Select **Hard disk information**.

   The free hard disk space is shown in the upper-right corner.

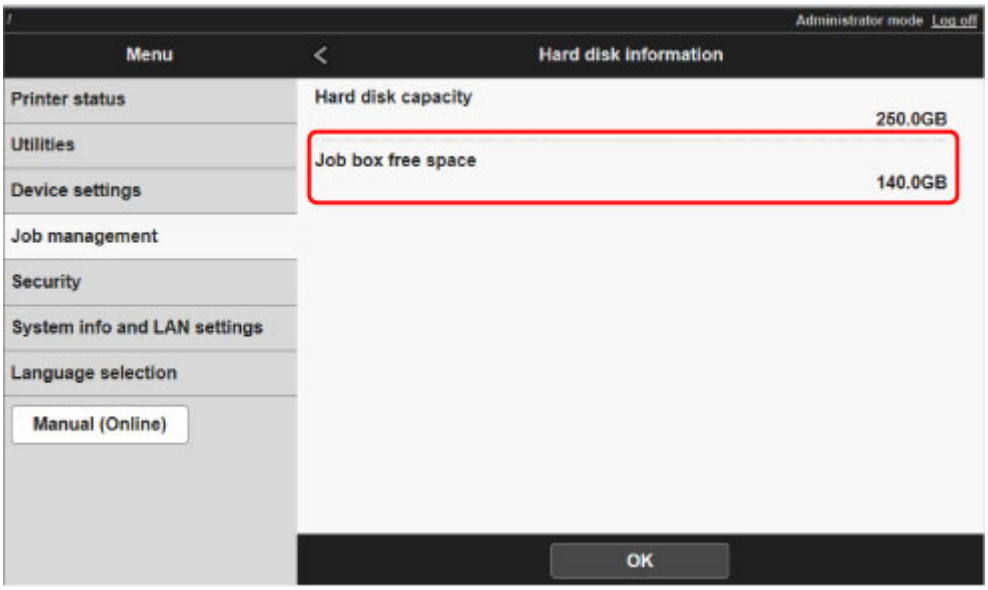

Troubleshooting

Frequently Asked Questions

- I want to easily create vertical or horizontal banners.
- Does this printer support sub-ink tank system?
- I want to know how to configure roll cutting.
- I want to configure so that the roll is cut automatically after waiting for the ink to dry.
- I want to print borderless (without a border)
- I want to know the paper types that can be used in this printer.
- The paper type that I want to print is not displayed on the Touch Screen.
- What type of function is color calibration?
- Can I perform duplex printing?
- I want to perform enlargement printing.

Examples of Problems

- Problems Regarding Paper
  - Clearing Jammed Roll Paper
  - Clearing a Jammed Sheet
  - Roll paper cannot be inserted into the Paper Feed Slot
  - Paper cannot be fed automatically
  - Cannot load sheets
  - Paper is not cut straight
  - Paper is not cut
  - The size of clear film cannot be detected
  - Margins are wide
  - When printing on thin roll paper, the printed surface becomes scratched
- Printing Does Not Start
  - The Data lamp on the Control Panel does not light up
  - The printer does not respond even if print jobs are sent
  - "Injecting the ink" is displayed
  - "Agitating the ink" is displayed
- The Printer Stops During a Print Job
  - Printing stops and an error message is displayed

- The printer ejects blank, unprinted paper
- Problems with the Printing Quality
  - Printing is faint
  - Paper rubs against the printhead
  - The edges of the paper are dirty
  - The surface of the paper is dirty
  - The back side of the paper is dirty
  - Immediately after borderless printing, the trailing edge margin is soiled during regular printing
  - Printed colors are inaccurate
  - Banding in different colors occurs
  - Colors in printed images are uneven
  - Image edges are blurred or white banding occurs
  - The contrast becomes uneven during printing
  - The length of printed images is inaccurate in the feeding direction
  - Images are printed crooked
  - Documents are printed in monochrome
  - Line thickness is not uniform
  - Lines or colors are misaligned
  - Borders appear in borderless printing
- Cannot Print over Network
  - Cannot Connect Printer to Network
  - Cannot Print over TCP/IP Network
  - Cannot Print over Bonjour networks (Mac OS)
- Cannot Find Printer on Network
  - Cannot Find Printer on Check Printer Settings Screen (Windows)
  - Cannot Proceed beyond Printer Connection Screen/Connect Cable Screen
  - Searching Printer by IP Address or Host Name During Setup
- Installation Problems
  - Removing Printer Software
- Other Problems
  - The printer does not turn on
  - The printer takes time to start up
  - If the Printer Makes a Strange Sound
  - Messages advising to check the maintenance cartridge are not cleared
  - The printer consumes a lot of ink

- Printed pages are not collected cleanly in the basket
- When Trim edge first is set, the trimmed paper is drawn into the roll unit
- Ink Level Detection

- List of Support Code for Error

I want to easily create vertical or horizontal banners.

You can print originals that are in landscape (or portrait) orientation automatically enlarged to fit the roll width. This is an easy way to create vertical or horizontal banners.

➡ Printing Hanging and Horizontal Banners (Large-Format Printing) (Windows)

➡ Printing Hanging and Horizontal Banners (Large-Format Printing) (Mac OS)

Does this printer support sub-ink tank system?

This printer supports hot-swap ink tank replacement.

Even if an ink tank becomes empty during printing, since a certain amount of ink always is stored in a sub-ink tank, you can replace the ink tank while printing.

Replacing Ink Tanks

I want to know how to configure roll cutting.

Cutting methods can be selected in the printer settings and printer driver settings.

To automatically cut roll paper after printing, open the **Cutting mode** settings on the printer, and then under **Automatic cut** set **Automatic Cutting** in the printer driver to **Yes**.

When using paper that is easily scratched, or paper where the ink requires extra time to fix, we recommend setting **Cutting mode** on the printer to **Eject cut**.

➡ Specifying the Cutting Method for Rolls

➡ Cutting Roll Paper after Printing (Windows)

➡ Cutting Roll Paper after Printing (Mac OS)

If using the Media Take-up Unit, see the pages below for cutting settings and rolling settings after cutting.

➡ Switching Roll Unit Modes

➡ Removing Printed Paper from the Roll Unit

I want to configure so that the roll is cut automatically after waiting for the ink to dry.

You can set an ink drying time in the printer driver.

You can also configure the same settings on the printer itself.

- Main Tab Description (Windows)
- Paper Detailed Settings (Mac OS)
- Specifying the Ink Drying Time for Rolls
- Menu Structure

I want to print borderless (without a border)

If printing on roll paper, you can set borderless printing in the printer driver settings. (If printing on sheets, borderless printing is not possible)

➡ Prints without Edges Based on the Scenarios (Windows)

➡ Prints without Edges Based on the Scenarios (Mac OS)

I want to know the paper types that can be used in this printer.

For information about paper that can be used with this printer, see the imagePROGRAF home page or refer to the media information list.

➡ Paper Information List

The paper type that I want to print is not displayed on the Touch Screen.

If using a new paper type, start the **Media Configuration Tool** to get the latest media information.

➡ Updating paper information

What type of function is color calibration?

The Color Calibration function operates during printing to correct color differences caused by differences between printers or by printer deterioration.

We recommend color calibration in the following situations.

- After initial printer installation
- When replacing the print head
- When you sense a change of color compared to previously
- When you want to coordinate color and print from multiple printers
- When the execution guide is displayed

Managing Colors

Performing Color Calibration

Q

Can I perform duplex printing?

A This printer cannot print double-sided.

An alternative to double-sided printing is to use the **Folded Duplex** function of the Windows software **Canon imagePROGRAF Free Layout**, which prints two pages on one side, folds the sheet back from the center, and hangs it.

I want to perform enlargement printing.

Use the printer driver to adjust the original to the paper size and width, or print enlarged or reduced by specifying a magnification factor.

➡ Scaled Printing (Windows)

➡ Scaled Printing (Mac OS)

Problems Regarding Paper

- Clearing Jammed Roll Paper
- Clearing a Jammed Sheet
- Roll paper cannot be inserted into the Paper Feed Slot
- Paper cannot be fed automatically
- Cannot load sheets
- Paper is not cut straight
- Paper is not cut
- The size of clear film cannot be detected
- Margins are wide
- When printing on thin roll paper, the printed surface becomes scratched

Clearing Jammed Roll Paper

If roll paper jams, follow the steps below to remove jams.

Note

- If "**The paper is jammed. Lift the release lever and remove the paper.**" appears on the touch screen, Step 1 and Step 9 can be skipped.

1. Turn off the power to the printer.

   Turning the Printer On and Off

2. Open the top cover.

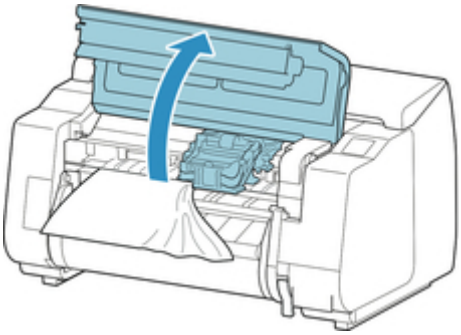

Note

- If the roll paper is very curled or the leading edge of the roll paper blocks the Carriage, setting the cutting method for the roll paper to **User cut** and leading edge detection to **Do not detect** may stop the paper from blocking the carriage.

  Specifying the Cutting Method for Rolls

3. If the Carriage is out, move the Carriage out of the way, away from the paper.

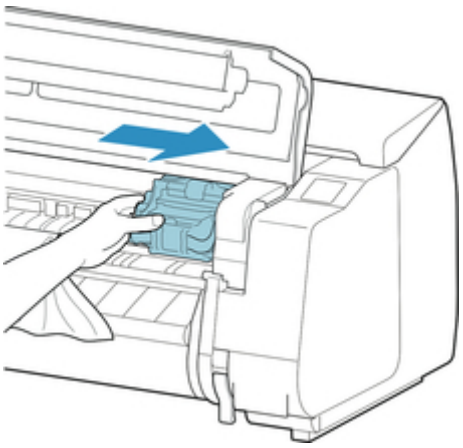

Important

- Do not touch the linear scale (A), carriage shaft (B), or ink tube stabilizer (C). Touching these may cause malfunction.

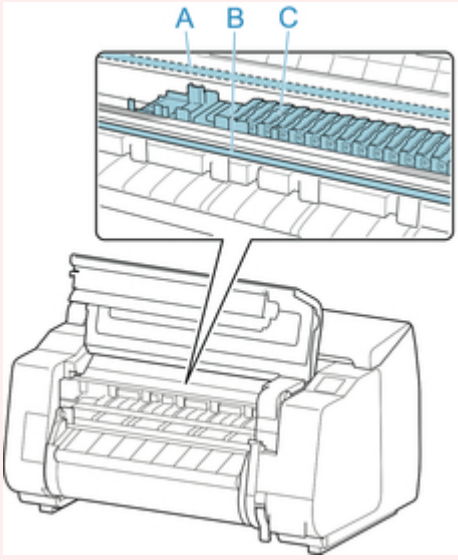

4. Lift up the release lever.

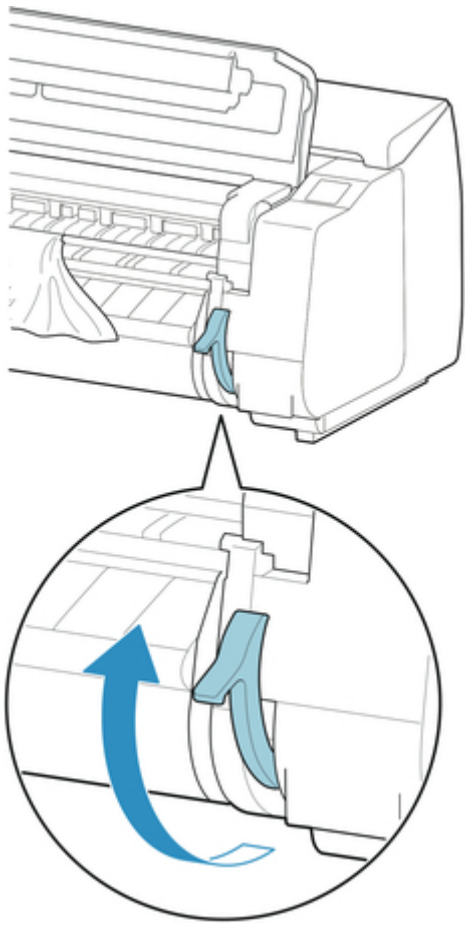

5. Holding the paper on both sides, pull the jammed portion out toward the front. Use scissors or a cutting tool to cut away the printed or wrinkled portion.

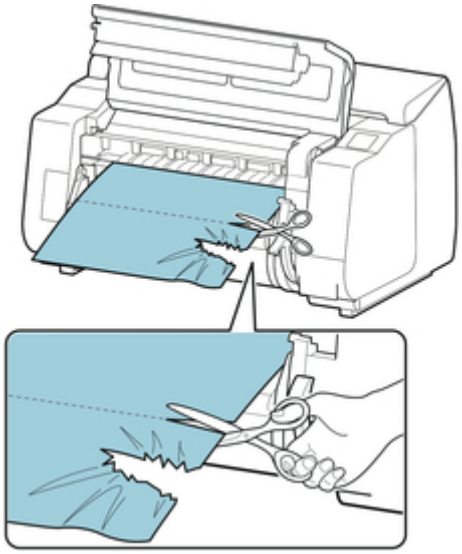

Caution

- Be careful not to injure yourself or scratch the printer when cutting.

6. If the Carriage is on the left, move the Carriage to the right until it stops.

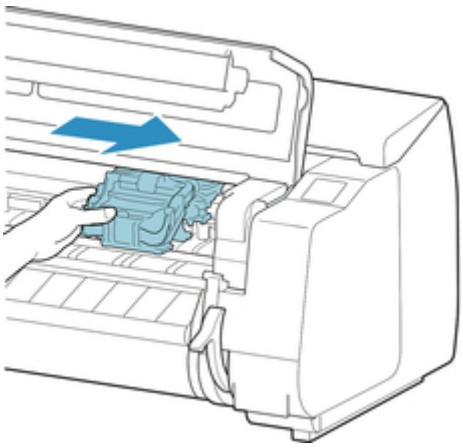

Important

- Always move the Carriage to the right side. If the Carriage is on the left, a Carriage error may occur when you turn on the printer.

7. While holding the leading edge of the roll paper in the middle and gently and evenly pulling until it reaches the output guide (A) position, align the right edge of the roll paper parallel to the paper alignment line (B), and lower the release lever.

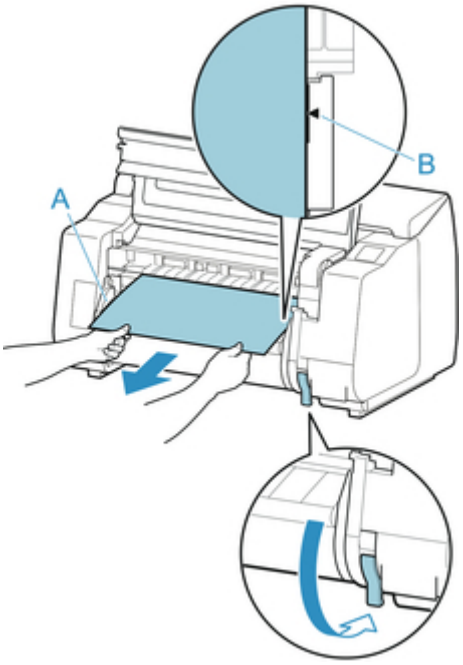

Important

- Do not pull the roll paper forcefully to make it line up with the paper alignment line (B). This might cause the roll paper to feed at an angle.

8. Close the top cover.

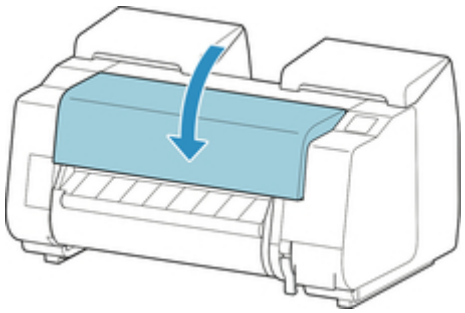

9. Turn on the power to the printer.

   ➡ Turning the Printer On and Off

   The roll is advanced and the printer is ready to print.

Note

- To trim the leading edge cleanly, select the paper being fed on the touch screen, and then cut the leading edge by tapping **Cut paper** in **Feed/cut**.

  ➡ Specifying the Cutting Method for Rolls

Clearing a Jammed Sheet

If a sheet jams, follow the steps below to remove it.

1. Turn off the power to the printer.

   Turning the Printer On and Off

2. Open the top cover.

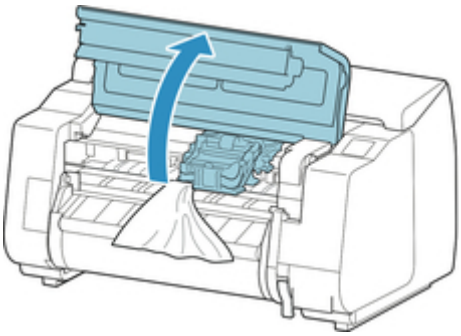

3. If the Carriage is out, move the Carriage out of the way, away from the paper.

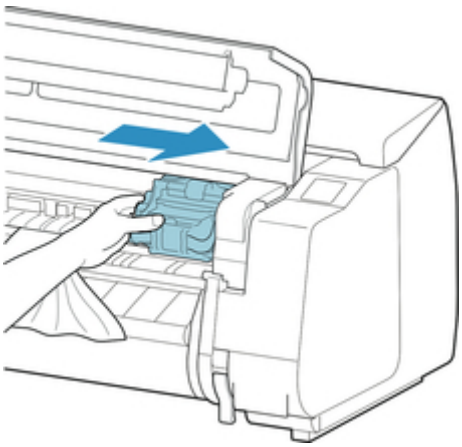

Important

- Do not touch the linear scale (A), carriage shaft (B), or ink tube Stabilizer (C). Touching these may cause malfunction.

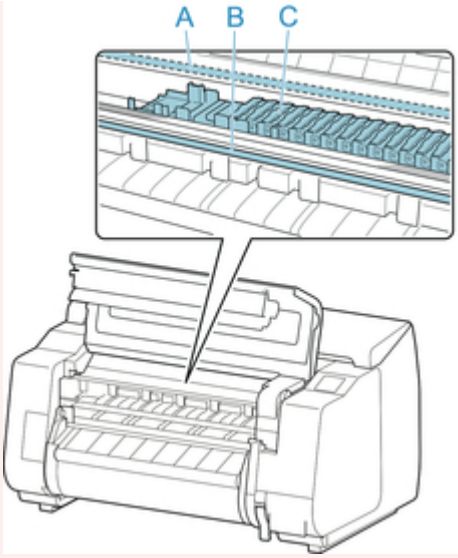

4. Lift up the release lever.

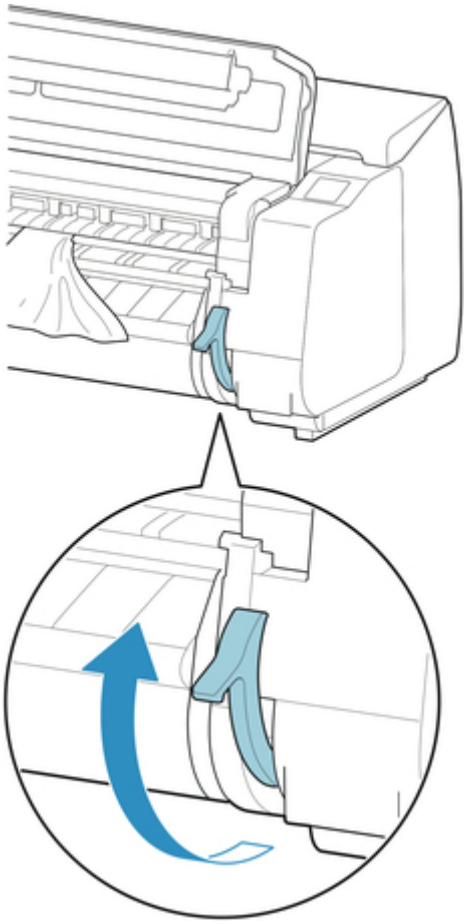

5. If the paper is visible, hold the paper and pull it out toward the front.

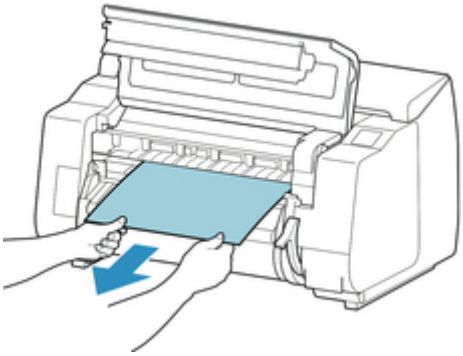

6. If you cannot see the paper, lift the output guide, remove the roll holder, and remove the jammed paper from underneath.

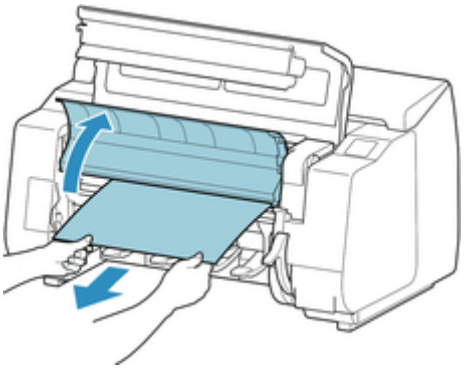

After removing the paper, inspect the interior to ensure paper fragments or other objects do not remain, and lower the output guide.

7. If the Carriage is on the left, move the Carriage to the right until it stops.

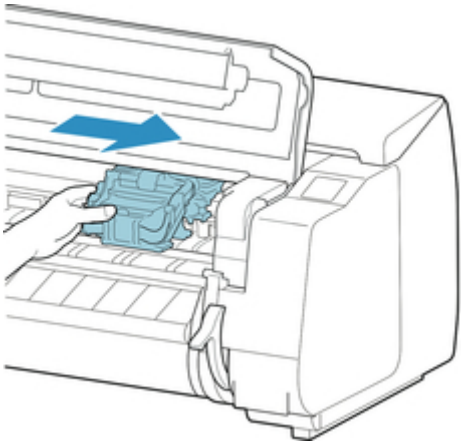

Important

- Always move the Carriage to the right side. If the Carriage is on the left, a Carriage error may occur when you turn on the printer.

8. Lower the release lever and close the top cover.

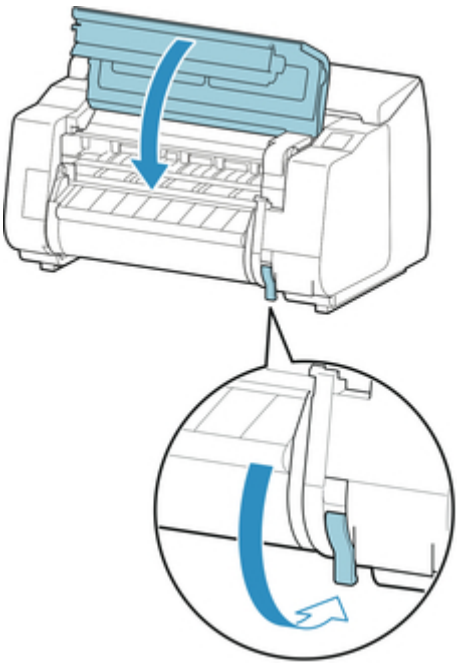

9. Turn on the power to the printer.

➡ Turning the Printer On and Off

Q

Roll paper cannot be inserted into the Paper Feed Slot

A

Check 1

Is the roll paper curled?

Straighten out curls and reload the roll.

Check 2

Is paper jammed in the feed slot?

Remove the jammed paper.

➡ Clearing Jammed Roll Paper

➡ Clearing a Jammed Sheet

Check 3

Check that the correct paper source has been selected

Select **Paper settings** in the touch screen menu, and then select the paper source.

Check 4

Is the roll unit in **Take-up mode** when feeding from the roll unit?

Select **Roll unit use setting** in the touch screen menu, and set it to paper feed mode.

➡ Loading the Lower Roll on the Roll Unit (Option)

Paper cannot be fed automatically

This paper cannot be fed automatically.

Set **Paper retention setting** to **Release** in the touch screen menu and feed the paper manually.

Menu Structure

Note

- While this setting is selected, you cannot use automatic roll paper switching.

Cannot load sheets

Check

Check that the correct paper source has been selected

Select **Paper settings** in the touch screen menu, and then select the paper source.

Tap **Load paper.** and load the paper.

Loading Sheets in the Printer

Q

Paper is not cut straight

A

Check 1

Is the edge of the paper cutting position creased?

Straighten out any curling by the edges of the paper.

Check 2

Is the edge of the paper cutting position lifting up when cutting?

Reload the paper correctly.

Check 3

Is the paper a type that can be cut with the cutter blade?

Set **Cutting mode** in the touch screen menu to **User cut**, then and cut the roll paper with a cutting implement such as scissors.

➡ Specifying the Cutting Method for Rolls

Check 4

Check that the **Cut speed** setting is correct

Change the **Cut speed** setting in the touch screen menu.

➡ Menu Structure

Check 5

Did the printing material slip diagonally while being cut?

Set the **Cutting mode** in the touch screen menu to **Eject cut**, and then hold and cut the material after it has printed.

➡ Specifying the Cutting Method for Rolls

Check 6

Is the cutter blade attached properly?

Attach the cutter blade properly.

➡ Replacing the Cutter Blade

Check 7

Is the edge of the cutter blade blunt?

Replace the cutter blade.

➡ Replacing the Cutter Blade

Q

Paper is not cut

A

Check 1

Is **Automatic Cutting** in the printer driver set to **No** or **Print Cut Guideline**?

Set the printer driver **Automatic Cutting** setting to **Yes**.

➡ Page Setup Tab Description (Windows)

➡ Paper Detailed Settings (Mac OS)

Check 2

Is **Cutting mode** in the touch screen menu set to **Eject cut** or **User cut**?

If **Cutting mode** is set to **Eject cut**, select **Feed/cut** in the touch screen menu and cut the paper.

If **Cutting mode** is set to **User cut**, cut the roll paper with a cutting implement such as scissors.

➡ Specifying the Cutting Method for Rolls

Check 3

Is the cutter blade attached?

Attach the cutter blade.

➡ Replacing the Cutter Blade

Check 4

Is the cutting method for paper ejected after printing set to **Do not cut** when the roll unit is set to **Take-up mode**?

Follow the steps below to change the settings.

1. Select the roll unit on the touch screen.
2. Tap **Use in take-up mode**, and then select **Use the cutting mode setting**.
3. Set the **Cutting mode** for **Roll paper 1** on the touch screen to **Automatic cut**.

The size of clear film cannot be detected

Check

Is the platen dirty with ink?

Open the top cover and clean the entire platen area.

Cleaning Inside the Top Cover

Margins are wide

Check 1

Is auto cut being used on printed material with a wide margin on the trailing edge only?

Rolls are advanced a specific amount before cutting to prevent problems with cutting and paper ejection.

This operation is normal.

Check 2

Is leading edge detection set to **Do not detect**?

Do not detect may have been set by responding to the message **Do you want to set to detect the leading edge of the paper?** when **Cutting mode** was set to **User cut** in the touch screen menu.

If the message **Do you want to set to detect the leading edge of the paper?** appears when setting **Cutting mode** to **User cut**, select **Detect (recommended)**.

Please note that if **Detect (recommended)** is selected and the paper has a strong curl, the print head may rub against the edge of the paper when printing starts.

➡ Specifying the Cutting Method for Rolls

When printing on roll paper, the printed surface becomes scratched

Check 1

Depending on the paper, the printed surface may become scratched when the paper is fed.

In this case, you must set **Paper retention setting** to **Release** on the touch screen, and then manually feed the paper. Lift the release lever, feed the roll paper until the leading edge is visible on the platen, lower the release lever, and then proceed to the next step. If **Paper retention setting** is set to **Release**, you will no longer be able to automatically switch between the upper and lower roll paper.

Check 2

Has the roll paper lost tension during printing?

If the roll paper loses tension, the paper surface could be damaged and the paper could wrinkle or fold.

Set **Roll paper tension (printing)** in the touch screen menu to **High**.

Menu Structure

Note

- Carrying out **Adjust print quality** is recommended when changing **Roll paper tension (printing)** settings.

Printing Does Not Start

- The Data lamp on the Control Panel does not light up
- The printer does not respond even if print jobs are sent
- "Injecting the ink" is displayed
- "Agitating the ink" is displayed

The Data lamp on the Control Panel does not light up

Check 1

Does the printer have power?

Check that the power cord is firmly plugged all the way in. Push the **ON** button to turn on the power to the printer.

Check 2

Was the correct printer selected?

In Windows, select the printer by clicking **Select Printer** or **Printer** in the printing dialog box and try printing again.

In Mac OS, open the dialog box of the printer driver, select the printer from the list of **Printer**, and try printing again.

Check 3

Is the print job paused?

In Windows, restart the print job as follows.

1. Select the printer icon in the **Printers and Faxes** (or **Printers**) window.
2. Clear **Pause Printing** in the **File** menu to restart the print job.

In Mac OS, restart the print job as follows.

1. Click **Print & Scan** (or **Print & Fax**).
2. Select the printer, and then **Resume Printer** (or **Start Jobs**) in the **Printers** menu to restart the print job.

The printer does not respond even if print jobs are sent

Check 1

Is **Pause printing** set to **Enable**?

Set **Pause printing** on the touch screen menu to **Disable**.

Pausing Printing

Check 2

Is **Save in mail box** selected as the printer **Output Method**?

Print the job saved on the printer's hard disk.

Printing Saved Jobs

Check 3

Is the print job pending?

Manage the jobs on hold and print as needed.

Managing Pending Jobs (Printing or Deleting Jobs on Hold)

"Filling the ink" is displayed

The print head and sub-ink tank are being filled with ink.

Wait until the system has been filled with ink.

Note

- This message might appear if you force the power off while the printer is operating.

  Always follow the correct procedure when turning off the power.

  Turning the Printer On and Off

"Agitating the ink" is displayed

Ink agitation is in progress.

Please wait until ink agitation is finished.

Agitation time varies depending on time elapsed since powering off (approximately 1 minute to 20 minutes).

The Printer Stops During a Print Job

- Printing stops and an error message is displayed
- The printer ejects blank, unprinted paper

Q

Printing stops and an error message is displayed

A The last portion of roll paper was used during a print job, and paper could not be advanced because the trailing edge is taped to the roll.

Remove the used roll and insert a new roll.

➡ Removing the Upper Roll from the Printer

➡ Removing Rolls From the Roll Holder

➡ Loading and Printing on Rolls

The printer ejects blank, unprinted paper

Check 1

The leading edge of the roll paper may have been trimmed

The leading edge of the roll paper may be trimmed if **Trim edge first** is not set to **OFF** in the touch screen menu.

➡ Cutting the Leading Edge of Roll Paper Automatically

Check 2

Is the print head nozzle blocked?

Print a nozzle check pattern to check the print head status.

➡ Checking for Nozzle Clogging

Check 3

Is the correct printer driver selected?

Print again using the correct printer driver for your printer.

If none of the above apply, there may be a printer malfunction.

Contact your Canon dealer for assistance.

Problems with the Printing Quality

- Printing is faint
- Paper rubs against the printhead
- The edges of the paper are dirty
- The surface of the paper is dirty
- The back side of the paper is dirty
- Immediately after borderless printing, the trailing edge margin is soiled during regular printing
- Printed colors are inaccurate
- Banding in different colors occurs
- Colors in printed images are uneven
- Image edges are blurred or white banding occurs
- The contrast becomes uneven during printing
- The length of printed images is inaccurate in the feeding direction
- Images are printed crooked
- Documents are printed in monochrome
- Line thickness is not uniform
- Lines or colors are misaligned
- Borders appear in borderless printing

Q

Printing is faint

A

Check 1

Is the reverse side of the paper being used for printing?

Print on the printing surface.

Check 2

Is the print head nozzle blocked?

Print a test pattern to check the nozzles and see if they are clogged.

➡ Checking for Nozzle Clogging

Note

- To automatically check for nozzle blockages after printing, set **Auto nozzle check** in the touch screen menu to a setting other than **Disable**.

  To show warnings based on nozzle check results, set **Nozzle check error display** in the touch screen menu to **Enable**.

  However, printing may be stopped by warnings if this setting is set to **Enable**.

  ➡ Menu Structure

Check 3

Was the printer left with the ink tank out?

The ink supply may become blocked by ink if the ink tank is left out.

If this happens, leave the printer for at least 24 hours with the ink tank in, and then carry out **Print head cleaning**.

➡ Cleaning the Print Head

Check 4

Are paper scraps stuck in the top cover?

Follow the steps below to remove paper scraps left inside the top cover.

1. Open the top cover and make sure that the carriage is not over the platen.
2. Remove any paper scraps left inside the top cover.

   ➡ Clearing Jammed Roll Paper

   ➡ Clearing a Jammed Sheet

3. Close the top cover.

Check 5

Was the paper cut before the ink dried?

Set a longer **Ink drying wait time** in **Advanced paper settings** in the touch screen menu.

➡ Menu Structure

Check 6

Is the printer driver **Print Quality** set to **Fast**?

Follow the steps below to set **Print Quality** to a setting other than **Fast**, and then print.

- Windows

  Change the **Print Quality** settings in the printer driver **Advanced Settings**.

  ➡ Changing the Print Quality and Correcting Image Data (Windows)

- Mac OS

  Change the **Print Quality** in the printer driver **Quality & Media** settings.

  ➡ Changing the Print Quality and Correcting Image Data (Mac OS)

When **Fast** or **Standard** is selected, the printing time is shorter and less ink is used than with **Highest** or **High**, but the print quality is reduced.

Check 7

Does the paper used for printing create a lot of cutting dust?

Set **Cut-dust reduction** in the touch screen menu **Advanced paper settings** to **ON**.

➡ Reducing Dust from Cutting Rolls

Q

Paper rubs against the printhead

A

Check 1

Is the media type specified in the printer driver the same as the media type loaded in the printer?

Load paper of the same type as you have specified in the printer driver.

➡ Loading the Upper Roll on the Printer

➡ Loading Sheets in the Printer

Follow the steps below to match the media type in the printer driver to the media type loaded in the printer.

1. To stop printing, press the **Stop** button.
2. Change the paper type in the printer driver and try printing again.

Check 2

Is the paper loaded properly?

If not loaded properly, paper can buckle and rub against the print head.

Reload the paper.

➡ Loading the Upper Roll on the Printer

➡ Loading Sheets in the Printer

Check 3

Is the print head height set too low?

Set **Paper Thickness (Head Height)** in the touch screen menu to **Auto**.

➡ Troubleshooting Paper Abrasion and Blurry Images

Check 4

Is the paper thick, or a type that curls easily or is prone to buckling after absorbing ink?

If using paper-based printing material such as Heavyweight Coated Paper, set **Transport unit vacuum strength** in the touch screen menu to **Medium-strong** or **Strong**. If that does not resolve the problem, increase the **Paper Thickness (Head Height)** setting in the touch screen menu.

➡ Adjusting Vacuum Strength

➡ Troubleshooting Paper Abrasion and Blurry Images

If using film-based printing material such as CAD Tracing Paper, set the **Transport unit vacuum strength** in the touch screen menu to **Standard**, **Medium-strong**, or **Strong**. If that does not resolve the problem, increase the **Paper Thickness (Head Height)** setting in the touch screen menu.

➡ Adjusting Vacuum Strength

➡ Troubleshooting Paper Abrasion and Blurry Images

If using paper thinner than 0.004 inches (0.1 mm), set **Transport unit vacuum strength** in the touch screen menu to **Weak**. If that does not resolve the problem, increase the **Paper Thickness (Head Height)** setting in the touch screen menu.

➡ Adjusting Vacuum Strength

➡ Troubleshooting Paper Abrasion and Blurry Images

Check 5

When loading paper in the printer, is the media loaded the same as the media type selected on the touch screen?

Select the correct media type in the touch screen menu when loading paper in the printer.

➡ Loading the Upper Roll on the Printer

➡ Loading Sheets in the Printer

Check 6

Does the paper have a strong curl at the front edge or is it buckled?

Set **Cutting mode** in the touch screen menu to **User cut**, and set leading edge detection to **Do not detect**.

To keep track of the amount of roll paper remaining in this situation, set **Manage remaining roll amount** to **OFF** before loading the roll paper, and then set **Manage remaining roll amount** back to **ON** after the roll paper is loaded.

➡ Specifying the Cutting Method for Rolls

➡ Keeping Track of the Amount of Roll Paper Left

The edges of the paper are dirty

Check 1

Was printing borderless or on small paper?

The platen may become dirtied by printing borderless or on small paper sizes.

Open the top cover and clean the platen.

Cleaning Inside the Top Cover

Check 2

Is **Extension for borderless printing** in the touch screen menu set to **Large** or **Standard**?

Set **Paper with adequate width** in **Extension for borderless printing** to **Small**.

Menu Structure

Check 3

Is the media type specified in the printer driver the same as the media type in the printer?

Make sure the same type of paper is specified on the printer as in the printer driver.

Changing the Type of Paper

Follow the steps below to change the printer driver settings.

1. To stop printing, press the **Stop** button.
2. Change the type of paper in the printer driver and try printing again.

Check 4

Is the paper creased or curled?

Straighten out the wrinkles or curls and reload the paper. Do not use paper that has been printed on previously.

Loading the Upper Roll on the Printer

Loading Sheets in the Printer

Check 5

Is **Cut-dust reduction** in the touch screen menu **Advanced paper settings** set to **ON**?

A cut dust reduction line is printed at the paper cut position when **Cut-dust reduction** is set to **ON**.

If cutting dust reduction is not required, set **Cut-dust reduction** to **OFF**.

Menu Structure

Check 6

Is the print head height set too low in the touch screen menu?

Set **Paper Thickness (Head Height)** to **Auto**.

➡ Troubleshooting Paper Abrasion and Blurry Images

Check 7

Is the paper thick, or a type that curls easily or is prone to buckling after absorbing ink?

If using paper-based printing material such as thick-coat paper, set **Transport unit vacuum strength** in the touch screen menu to **Medium-strong** or **Strong**. If that does not resolve the problem, increase the **Paper Thickness (Head Height)** setting in the touch screen menu.

➡ Adjusting Vacuum Strength

➡ Troubleshooting Paper Abrasion and Blurry Images

If using film-based printing material such as tracing paper, set the **Transport unit vacuum strength** in the touch screen menu to **Standard**, **Medium-strong**, or **Strong**. If that does not resolve the problem, increase the **Paper Thickness (Head Height)** setting in the touch screen menu.

➡ Adjusting Vacuum Strength

➡ Troubleshooting Paper Abrasion and Blurry Images

Check 8

Is the output guide clean?

Clean the output guide.

➡ Cleaning the Printer Exterior

The surface of the paper is dirty

Check 1

Is the paper retainer clean?

Clean the paper retainer.

Cleaning Inside the Top Cover

Check 2

Does this paper take longer to dry?

Set the **Ink drying wait time** in the touch screen menu to approximately **1 minute**.

Menu Structure

Note

- When printing on paper that takes longer to dry, the paper may curl during printing and come in contact with the output slot.

  In such situations, set an **Ink drying wait time** and an **Ink drying target area** for **Pause between scans** in the touch screen menu.

  However, note that printing will now take longer.

  Menu Structure

Note

- In a hot and humid environment, rolling paper printed with images containing areas of saturated color may transfer ink to the contact surface, affecting print quality.

  Move the printer to a different environment, or let the paper dry before rolling it.

Q

The back side of the paper is dirty

A

Check 1

Was the previous print job borderless, or printed on small paper?

Open the top cover and clean the platen.

➡ Cleaning Inside the Top Cover

Check 2

Is **Detect paper width** in the touch screen menu set to **OFF**?

Printing with **Detect paper width** set to **OFF** may cause the platen to be dirtied.

Set **Detect paper width** in the touch screen menu to **ON**, and then open the top cover and clean the platen.

➡ Cleaning Inside the Top Cover

To continue printing with **Detect paper width** set to **OFF**, first open the top cover and clean the platen, and then manually feed roll paper over the platen when printing.

➡ Cleaning Inside the Top Cover

➡ Feeding Roll Paper Manually

Check 3

Paper may be gripped weakly over the platen.

Set a higher **Transport unit vacuum strength** in the touch screen menu.

➡ Adjusting Vacuum Strength

Check 4

Is **Extension for borderless printing** in the touch screen menu set to **Large** or **Standard**?

Set **Paper with recommended width** and **Paper with adequate width** in **Extension for borderless printing** to **Small**.

➡ Menu Structure

Note

- In a hot and humid environment, rolling paper printed with images containing areas of saturated color may transfer ink to the contact surface, affecting print quality.

  Move the printer to a different environment, or let the paper dry before rolling it.

Immediately after borderless printing, the trailing edge margin is soiled during regular printing

In some situations, borderless printing with automatic cutting of the leading and trailing edges on roll paper may transfer ink on the cutter blade to the next item printed.

Follow the steps below to change **Between Pages** in **Drying Time** to between 30 seconds and 3 minutes and perform borderless printing.

- Windows
  1. Click **Specify** for **Media Type** on the **Main** sheet of the printer driver.
  2. Select an ink drying time from the **Between Pages** list in **Drying Time**.
- Mac OS
  Select an ink drying time from the **Drying Time** list on the **Paper Detailed Settings** sheet of the printer driver.

Q

Printed colors are inaccurate

A

Check 1

Has color been adjusted in the printer driver?

Follow the steps below to adjust color settings.

- Windows
  Adjust the color settings with **Color Mode** > **Color Settings** in **Advanced Settings** in the printer driver.

  ➡ Main Tab Description (Windows)

- Mac OS
  Adjust the color settings in the printer driver **Color Options**.

  ➡ Color Options (Mac OS)

Check 2

Has the computer or monitor color been adjusted?

Take the actions below.

- Refer to the computer and monitor documentation to adjust the colors.
- Adjust the settings of the color management software, referring to the software documentation as needed.

Check 3

Is the print head nozzle blocked?

Print a test pattern to check the nozzles and see if they are clogged.

➡ Checking for Nozzle Clogging

Check 4

Is **Application Color Matching Priority** set to **Off** in a Windows printer driver?

In the printer driver **Layout** sheet, click **Special Settings**, and then set **Application Color Matching Priority** to **On** in the dialog box that appears.

➡ Layout Tab Description (Windows)

Check 5

Has the print head been replaced?

Differences between one print head and another may result in a change in color after replacing a print head.

Execute color calibration.

➡ Performing Color Calibration

Check 6

The print head characteristics may have changed

The characteristics of a print head may change with repeated use, including color.

Execute color calibration.

➡ Performing Color Calibration

Check 7

Color varies even between printers of the same model due to differences in firmware and printer driver versions, settings, or environment

Follow these steps to prepare the printing environment.

1. Use the same version of firmware or printer driver.
2. Specify the same value for all settings items.
3. Execute color calibration.

   ➡ Performing Color Calibration

Check 8

Was Select Your Place of Residence changed in the Media Configuration Tool when reinstalling the printer driver?

Changing the region selection of the Media Configuration Tool deletes the region-specific paper information originally registered on the printer before installation. Using paper with deleted information when executing color calibration will prevent the resulting calibration adjustment value from being applied to all other types of the paper.

Prepare paper compatible with calibration in the newly selected region and perform calibration again.

➡ Performing Color Calibration

Q

Banding in different colors occurs

A

Check 1

Are paper actually loaded on the printer and the media type selected on the touch screen the same?

Select the correct media type in the touch screen menu when loading paper in the printer.

➡ Loading the Upper Roll on the Printer

➡ Loading Sheets in the Printer

Check 2

Has the paper feed rate been calibrated properly?

Adjust the feed amount.

➡ Adjusting Feed Amount

Check 3

Print job may have been interrupted while receiving, and therefore not printed at a fast frame rate

Exit other applications and cancel other print jobs.

Check 4

Is **Set priority** in the touch screen menu set to **Prioritize length accuracy**?

Setting **Set priority** to **Prioritize print quality** and adjusting the feed amount can help.

➡ Adjusting Feed Amount

Check 5

Check if the print head is in the right position

Adjust the print head position.

➡ Automatic Adjustment to Straighten Lines and Colors

Check 6

Make sure that the print head nozzle is not blocked

Print a test pattern to check the nozzles and see if they are clogged.

➡ Checking for Nozzle Clogging

Note

- To automatically check for nozzle blockages after printing, set **Auto nozzle check** in the touch screen menu to a setting other than **Disable**.

  To show warnings based on nozzle check results, set **Nozzle check error display** in the touch screen menu to **Enable**.

  However, printing may be stopped by warnings if this setting is set to **Enable**.

  Menu Structure

Check 7

Low **Print Quality** setting causing lines in the printing

Follow the steps below to set **Print Quality** to **Highest** or **High**, and then print.

- Windows
  Change the **Print Quality** settings in the printer driver **Advanced Settings**.

  Changing the Print Quality and Correcting Image Data (Windows)

- Mac OS
  Change the **Print Quality** in the printer driver **Quality & Media** settings.

  Changing the Print Quality and Correcting Image Data (Mac OS)

When **Fast** or **Standard** is selected, the printing time is shorter and less ink is used than with **Highest** or **High**, but the print quality is reduced.

Check 8

Is the media type specified in the printer driver the same as the media type loaded in the printer?

Load paper of the same type as you have specified in the printer driver.

Loading the Upper Roll on the Printer

Loading the Lower Roll on the Roll Unit (Option)

Loading Sheets in the Printer

Follow the steps below to change the printer driver settings.

1. To stop printing, press the **Stop** button.
2. Change the type of paper in the printer driver and try printing again.

Q

Colors in printed images are uneven

A

Check 1

Does this paper curl easily?

Colors in printed images may be uneven at the leading edge of paper that curls easily. Change the **Transport unit vacuum strength** in the touch screen to increase the grip on the paper, or set a margin of at least 0.8 inches (20 mm) at the front edge of the paper.

➡ Adjusting Vacuum Strength

Check 2

Colors in printed images may be uneven if the **Print Quality** setting is too low

If using Windows, select **Advanced Settings** from the **Main** tab of the printer driver, and then select a higher **Print Quality** setting.

If using Mac OS, select **Quality & Media** in the printer driver, and then select a higher **Print Quality** setting.

When **Fast** or **Standard** is selected, the printing time is shorter and less ink is used than with **Highest** or **High**, but the print quality is reduced.

➡ Changing the Print Quality and Correcting Image Data (Windows)

➡ Changing the Print Quality and Correcting Image Data (Mac OS)

Check 3

Colors in printed images may be uneven on the boundary between shades if there are dark and light areas in an image

Using the unidirectional printing function may reduce color unevenness in this situation.

Follow the steps below for unidirectional printing.

- Windows
  Open **Paper Detailed Settings** from the **Main** tab of the printer driver, and then select **Unidirectional Printing**.
- Mac OS
  Open **Paper Detailed Settings** in the printer driver, and then select **Unidirectional Printing**.

Check 4

If printing borderless, colors in printed images may be a little uneven at the leading edge of the paper because printing is interrupted to cut the paper

Set the printer driver **Automatic Cutting** settings to **No**, and then print. Doing this prints only the left and right sides borderless. Cut the top and bottom borders with a cutting implement such as scissors after the printed materials are output and cut.

Note

- Selecting a higher **Print Quality** in the printer driver **Advanced Settings** may resolve the problem.
  - Changing the Print Quality and Correcting Image Data (Windows)
  - Changing the Print Quality and Correcting Image Data (Mac OS)

Check 5

Check if the print head is in the right position

Adjust the print head position.

Automatic Adjustment to Straighten Lines and Colors

Check 6

Color may be uneven if printing materials were stacked while drying

To avoid uneven colors, we recommend drying each sheet separately.

Check 7

Density may be uneven if using **Glossy Paper** or **Coated Paper**

Set **Print Quality** to **Highest** or **High**, and then print.

Check 8

Is the media type specified in the printer driver the same as the media type loaded in the printer?

Load paper of the same type as you have specified in the printer driver.

Loading the Upper Roll on the Printer

Loading Sheets in the Printer

Follow the steps below to match the media type in the printer driver to the media type loaded in the printer.

1. To stop printing, press the **Stop** button.
2. Change the type of paper in the printer driver and try printing again.

Check 9

Is **Ink drying target area** for **Pause between scans** in the touch screen menu set to **Leading edge**?

If the **Ink drying target area** for **Pause between scans** is set to **Leading edge**, color may be uneven approximately 4.3 to 6.3 inches (110 to 160 mm) from the front edge of the paper. (The position depends on the **Print Quality** settings)

In this case, set **Ink drying target area** for **Pause between scans** to **Overall**.

However, note that printing will now take longer.

Menu Structure

Q

Image edges are blurred or white banding occurs

A

Check 1

Paper may be gripped too strongly over the platen

Set a lower **Transport unit vacuum strength** in the touch screen menu.

➡ Adjusting Vacuum Strength

Check 2

Check if the print head is in the right position

For detailed printing of small text or fine lines on glossy or semi-gloss photo paper or proof paper, set the print head to the optimal height and then adjust the position of the print head.

➡ Adjusting the Print Head

Setting a lower value for **Paper Thickness (Head Height)** in the touch screen menu may resolve the problem.

➡ Troubleshooting Paper Abrasion and Blurry Images

Check 3

Is the media type specified in the printer driver the same as the media type loaded in the printer?

Load the printer with the media type specified in the printer driver.

➡ Loading the Upper Roll on the Printer

➡ Loading Sheets in the Printer

Follow the steps below to match the media type in the printer driver to the media type loaded in the printer.

1. To stop printing, press the **Stop** button.
2. Reset the media type in the printer driver, and then print.

The contrast becomes uneven during printing

Check 1

Has the paper feed rate been calibrated properly?

Adjust the feed amount.

Adjusting Feed Amount

Check 2

Is the media type specified in the printer driver the same as the media type loaded in the printer?

Load the printer with the media type specified in the printer driver.

Loading the Upper Roll on the Printer

Loading Sheets in the Printer

Follow the steps below to match the media type in the printer driver to the media type loaded in the printer.

1. To stop printing, press the **Stop** button.
2. Change the type of paper in the printer driver and try printing again.

Q

The length of printed images is inaccurate in the feeding direction

A

Check 1

Is **Set priority** for **Paper feed adjustment** in the touch screen menu set to **Prioritize print quality**?

Set **Set priority** for **Paper feed adjustment** to **Prioritize length accuracy**, and then carry out **Adjust feed length**.

➡ Adjusting Feed Amount

Check 2

Is the media type specified in the printer driver the same as the media type loaded in the printer?

Load the printer with the media type specified in the printer driver.

➡ Loading the Upper Roll on the Printer

➡ Loading Sheets in the Printer

Follow the steps below to match the media type in the printer driver to the media type loaded in the printer.

1. To stop printing, press the **Stop** button.
2. Reset the media type in the printer driver, and then print.

Q

Images are printed crooked

A

Check 1

Is **Skew detection accuracy** in the touch screen menu set to **Loose** or **OFF**?

Set **Skew detection accuracy** to **Standard**, and then reload the paper.

➡ Menu Structure

Check 2

Is **Detect paper width** set to **OFF**?

Set **Detect paper width** in the touch screen menu to **ON**.

➡ Menu Structure

Check 3

Has the roll paper been loaded at an angle?

If there is a gap between the roll paper and roll holder, reload the roll.

➡ Loading Rolls on the Roll Holder

➡ Loading the Upper Roll on the Printer

Documents are printed in monochrome

Check 1

Is **Color Mode** set to **Monochrome**, or **Print Target** set to **Monochrome (Photo)** in a Windows printer driver?

In the **Advanced Settings** of the printer driver, specify **Color** in **Color Mode** and try printing again.

Check 2

Is **Black and White Photo Print** selected in a Mac OS printer driver?

Deselect **Black and White Photo Print** in the printer driver **Quality & Media** settings, and then print again.

Check 3

The print head nozzle may be blocked

Print a test pattern to check the color ink nozzles and see if they are clogged.

Checking for Nozzle Clogging

Q

Line thickness is not uniform

A

Check 1

Is **Fast Graphic Process** set to **On** in the Windows printer driver **Special Settings** dialog box?

Access the printer driver **Properties** dialog box from **Print** in the **File** menu of the source application, and follow these steps to print.

1. Deselect **Preview before printing** in the **Main** sheet.
2. Deselect **Page Layout** in the **Layout** sheet.
3. Click the **Special Settings** button in the **Layout** sheet, and then set **Fast Graphic Process** to **Off** in the **Special Settings** dialog box that opens.

Check 2

Is the media type specified in the printer driver the same as the media type loaded in the printer?

Load the printer with the media type specified in the printer driver.

➡ Loading the Upper Roll on the Printer

➡ Loading Sheets in the Printer

Follow the steps below to match the media type in the printer driver to the media type loaded in the printer.

1. To stop printing, press the **Stop** button.
2. Reset the media type in the printer driver, and then print.

Check 3

Adjust the position of the print head

For detailed printing of small text or fine lines on glossy or semi-gloss photo paper or proof paper, set the print head to the optimal height and then adjust the position of the print head.

➡ Adjusting the Print Head

Note

- Setting a lower value for **Paper Thickness (Head Height)** in the touch screen menu may resolve the problem.

  ➡ Troubleshooting Paper Abrasion and Blurry Images

Q

Lines or colors are misaligned

A

Check 1

Adjust the position of the print head

If borders are misaligned or the print results are not uniform, adjust the position of the print head.

➡ Adjusting the Print Head

For detailed printing of small text or fine lines on glossy or semi-gloss photo paper or proof paper, set the print head to the optimal height and then adjust the position of the print head.

➡ Changing the Print Quality and Correcting Image Data (Windows)

➡ Changing the Print Quality and Correcting Image Data (Mac OS)

Note

- Setting a lower value for **Paper Thickness (Head Height)** in the touch screen menu may resolve the problem.

  ➡ Troubleshooting Paper Abrasion and Blurry Images

Check 2

Is the media type specified in the printer driver the same as the media type loaded in the printer?

Load the printer with the media type specified in the printer driver.

➡ Loading the Upper Roll on the Printer

➡ Loading Sheets in the Printer

Follow the steps below to match the media type in the printer driver to the media type loaded in the printer.

1. To stop printing, press the **Stop** button.
2. Reset the media type in the printer driver, and then print.

Borders appear in borderless printing

Check 1

If printing full-scale borderless, is the selected paper wider than the source size?

For borderless printing at actual size, use roll paper that has the same width as the actual page size.

➡ Printing Full-Size without Margins (Windows)

➡ Printing Full-Size without Margins (Mac OS)

Check 2

Does the source file have margins?

Check that the printing image data does not have any objects like crop marks and transparent objects.

Check 3

Is a margin set in application software?

Check that no margins are configured in the application software you are using.

Check 4

Is the **Extension for borderless printing** set to **Small**?

In **Extension for borderless printing** in the touch screen menu, set **Paper with recommended width** and **Paper with adequate width** to **Standard**.

➡ Menu Structure

Check 5

Is the width of the paper recommended for borderless printing?

For paper sizes that are not recommended for borderless printing, a slight margin will automatically be generated on the left and right. You can set the amount of border at this time with **Extension for borderless printing** > **Paper with adequate width** in the touch screen menu.

However, **Extension for borderless printing** is increased, the platen may become dirty.

For details on paper sizes recommended for borderless printing, see Paper Sizes.

➡ Paper Sizes

Cannot Print over Network

- Cannot Connect Printer to Network
- Cannot Print over TCP/IP Network
- Cannot Print over Bonjour networks (Mac OS)

Cannot Connect Printer to Network

Check1 Is the Ethernet cable connected correctly to the printer's Ethernet port?

Make sure the printer is connected to the network with the correct Ethernet cable, and then turn the printer on. For instructions on connecting the cable, refer to the Setup Guide.

Check2 Make sure the Link indicator is lit.

The top and bottom indicators are lit if the printer is connected via 1000Base-T. The top indicator is green if the printer is connected via 100Base-TX, and the bottom indicator is orange if connected via 10Base-T.

If the Link indicator is not lit, check the following points.

- The hub is on.
- The end of the Ethernet cable is connected correctly.

  Insert the Ethernet cable until it clicks and locks in place.
- There is no problem with the Ethernet cable.

  If there is any problem, replace the Ethernet cable.
- Check the communication mode with the hub.

  Although the printer normally detects the hub communication mode and transmission rate automatically (in auto negotiation mode), sometimes the hub settings cannot be detected. In this case, configure the connection method manually, specifying the communication mode in use.

Cannot Print over TCP/IP Network

Check1 Is the printer's IP address configured correctly?

Make sure the printer's IP address is configured correctly.

Note

- For Windows, you can configure the printer's IP address using IJ Network Device Setup Utility.
  - For wired LAN:
    - Performing/Changing Wired LAN Settings
  - For wireless LAN:
    - Performing/Changing Wireless LAN Settings

Check2 Are the printer's TCP/IP network settings configured correctly?

Make sure the printer's TCP/IP network settings are configured correctly.

Check3 Is the computer you are trying to print from configured correctly?

Make sure the computer's TCP/IP network settings are configured correctly.

Cannot Print over Bonjour networks (Mac OS)

Check1 Is the computer you are trying to print from configured correctly?

Make sure the computer is configured correctly.

Check2 Are the computer and printer on the same network?

Due to the nature of Bonjour, printing may not be possible if the printer is on another network behind a router. Make sure the computer and printer are on the same network. For information about network settings, ask your network administrator.

Cannot Find Printer on Network

- Cannot Find Printer on Check Printer Settings Screen (Windows)
- Cannot Proceed beyond Printer Connection Screen/Connect Cable Screen
- Searching Printer by IP Address or Host Name During Setup

Cannot Find Printer on Check Printer Settings Screen (Windows)

If the printer cannot be found and the **Check Printer Settings** screen appears after searching the printer by **Automatic search** on the **Search for Printers** screen, click **Redetect** and search for the printer again by the IP address on the **Search for Printers** screen.

If the printer has not been found after searching it by the IP address, check network settings.

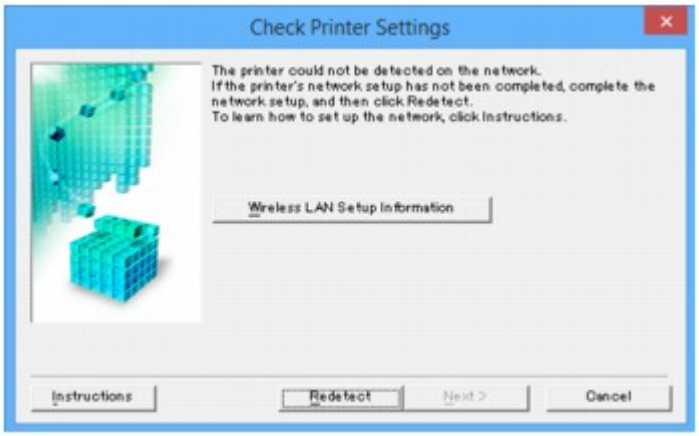

Q

Cannot Proceed beyond Printer Connection Screen/Connect Cable Screen

A

If you cannot proceed beyond the **Printer Connection** screen or the **Connect Cable** screen, check the following.

Check1 Make sure USB cable is securely plugged in to printer and computer.

Connect the printer and the computer using a USB cable as the illustration below. The USB port is located at the back of the printer.

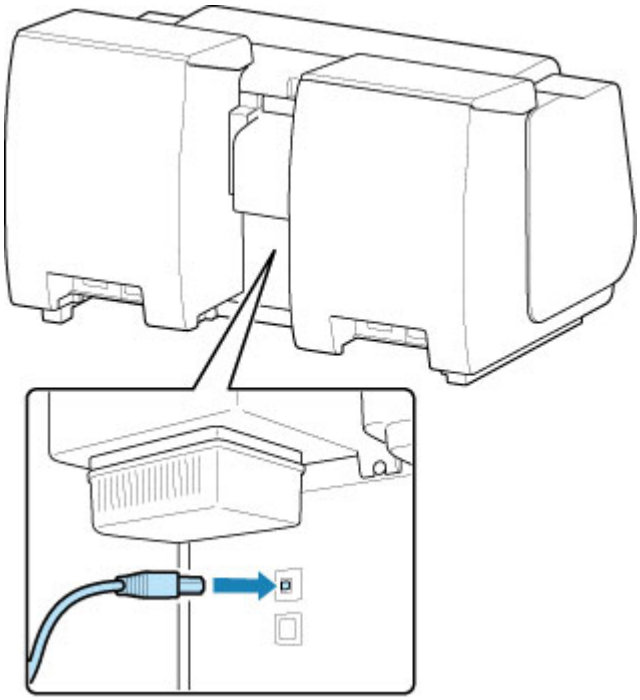

Check the items below only if you cannot proceed beyond the Printer Connection screen.

Check2 Follow procedure below to connect printer and computer again.

Important

- For Mac OS, make sure the lock icon is on the lower left of the **Printers & Scanners** screen (**Print & Scan** screen in Mac OS X v10.8 or Mac OS X v10.7).

  If the icon (locked) is displayed, click the icon to unlock. (The administrator name and the password are necessary to unlock.)

1. Turn off printer.
2. Unplug USB cable from printer and computer and connect it again.

3. Turn on printer.

Check3 If you cannot resolve problem, follow procedure below to reinstall printer driver.

- For Windows:
  1. Click **Cancel**.
     - If the **Installation Failure** screen appears:
       1. Click **Start Over**.
       2. Click **Exit** on **Start Setup** screen and finish setup.
     - If the **Connection failed.** screen appears:
       1. Click **Next**.
       2. Click **Next** on displayed screen.
       3. Click **Back to Top** on **Select Printer** screen.
       4. Click **Exit** on **Start Setup** screen and finish setup.
  2. Turn off printer.
  3. Restart computer.
  4. Make sure you have no application software running.
  5. Redo setup according to instructions on Canon website.

     Note

     - You can use the Setup CD-ROM to redo setup.

- For Mac OS:
  1. Click **Next**.
  2. Click **Exit** on displayed screen and finish setup.
  3. Turn off printer.
  4. Restart computer.
  5. Make sure you have no application software running.
  6. Redo setup according to instructions on Canon website.

Searching Printer by IP Address or Host Name During Setup

If the printer cannot be found on the **Select Printer** screen, search for the printer by an IP address or host name. Select **Specify the IP address and run the search** radio button and click **Next**. The screen to select searching criteria appears.

1. Check printer's IP address or host name.

   To check the printer's IP Address or host name, print out the network settings information or use the operation panel to display it.

   - Display on the touch screen.

     LAN settings

   - Print the network settings.

     Printing Network Settings

   Note

   - If you use the printer in an office, ask the network administrator.

2. Specify searching method.

   Select one of the method below.

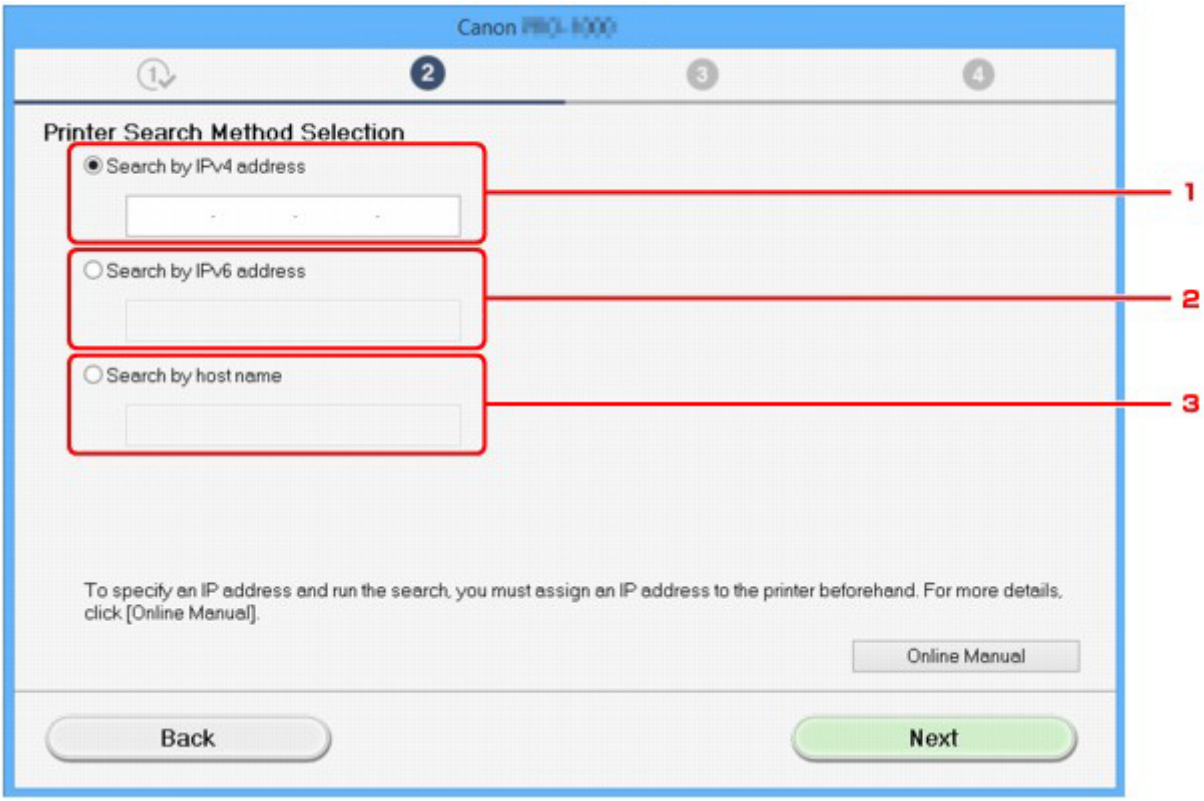

   1. **Search by IPv4 address**

      Select to search for printers by IPv4 address.

   2. **Search by IPv6 address**

      Select to search for printers by IPv6 address.

3. **Search by host name**

   Select to search for printers by host name. A host name is referred to as LLMNR host name or Bonjour name.

3. Enter IP address or host name and click **Next**.

   Printer search starts.

If an error screen appears:

Resolve the error according to the instruction on the screen.

If the IP address you entered is already used for another device, follow the procedure below to specify printer's IP address.

1. Flick HOME screen and tap **Device settings**.

   Menu Operations

2. Tap **LAN settings**.

   If you specify the administrator password, enter the password.

3. Tap **Other settings**.

4. Tap **TCP/IP settings**.

   If you specify IPv4 address:

   1. Tap **IPv4**.
   2. Tap **OK** on the displayed screen.
   3. Tap **IP address**.
   4. Tap **Manual setup**.

      Tapping **Auto setup** specifies the IP address automatically.
   5. Enter IP address.
   6. Tap **OK**.
   7. Enter subnet mask.
   8. Tap **OK**.
   9. Enter default gateway.
   10. Tap **OK**.

      The IPv4 address has been specified.

   If you specify IPv6 address:

   1. Tap **IPv6**.
   2. Tap **OK** on the displayed screen.
   3. Tap **Enable/disable IPv6**.

4. Tap **Enable**.

   The IPv6 address has been specified.

Important

- If firewall is enabled on the computer, printers on a different subnet may not be detected. Disable firewall.

If firewall interferes with printer search:

- **If message appears:**

  If a message appears warning that Canon software is attempting to access the network, set the security software to allow access.

  After allowing the software to access, specify the IP address or host name and search for printers again.

  If the printer is found, follow the instructions on the screen to continue to set up the network communication.

- **If no message appears:**

  Cancel searching printers, and then set the security software to allow Canon software below to access the network.

  - For Windows:

    Setup.exe or **Setup64.exe** in the **win** > **Driver** > **DrvSetup** folder on the Setup CD-ROM

  - For Mac OS:

    Setup.app, **canonijnetwork.bundle**, **cnwidsd.plugin**, **cnwidss.plugin**

  After setting the security software, specify the IP address or host name and search for printers again.

Note

- For more on firewall settings of your operating system or security software, see instruction manual or contact its manufacturer.

Installation Problems

- Removing Printer Software

Removing Printer Software

Follow the steps below to remove utility software installed on the computer.

Important

- You must log in as an administrator or have administrator permissions.

Note

- See the pages below for how to remove printer drivers.
  - Deleting the Unnecessary Printer Driver (Windows)
  - Delete the Unnecessary Canon IJ Printer from the Printer List (Mac OS)

Removing the IJ Network Device Setup Utility (Windows)

Follow the steps below to remove the IJ Network Device Setup Utility.

- Windows 10
  1. Right-click the **start** button and open **Control Panel**.
  2. Under **Programs**, select **Programs and Features**, select IJ Network Device Setup Utility from the list of programs, and then click **Uninstall**.
- Windows 8.1 and Windows 8
  1. Use the **Settings** charm on the desktop to open the **Control Panel**.
  2. Under **Programs**, select **Programs and Features**, select IJ Network Device Setup Utility from the list of programs, and then click the **Uninstall** button.
- Windows 7 and Windows Vista
  1. Select **Control Panel** from the **start** menu.
  2. Select **Uninstall a program**.
  3. Select IJ Network Device Setup Utility, and then click the **Uninstall** button.

Note

- If the **User Account Control** dialog box is displayed, click **Yes**.

Other Problems

- The printer does not turn on
- The printer takes time to start up
- If the Printer Makes a Strange Sound
- Messages advising to check the maintenance cartridge are not cleared
- The printer consumes a lot of ink
- Printed pages are not collected cleanly in the basket
- When Trim edge first is set, the trimmed paper is drawn into the roll unit
- Ink Level Detection

The printer does not turn on

Check 1

Is the power cord plugged in?

Plug the power cord into the outlet, and then turn on the printer.

Check 2

Is the specified voltage being supplied?

Check the voltage of the outlet and breaker.

Specifications

The printer takes time to start up

The printer may have shut down incorrectly last time. This may happen after power outages or if the printer is unplugged before it is turned off.

In this case, the next time power is restored, the printer's hard disk is checked, and startup may take some time.

Please wait a while, because it may take several minutes to finish checking the hard disk.

If an error message is displayed after the hard disk check, follow the instructions indicated to resolve the problem.

If the Printer Makes a Strange Sound

Check 1

Has an unusual noise been produced from the vicinity of the roll holder?

If dust accumulates on the gear (A) at the end of the roll holder, a noise may produced from that area.

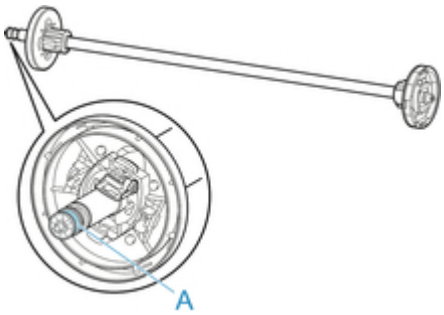

When the noise starts, clean the gear with the following procedure.

1. Remove the roll holder from the printer.
2. Wipe the dust off the gear with a damp, tightly wrung cloth, and then dry with a dry cloth.
3. Insert the roll holder in the printer.

Check 2

Operating noise may be heard from the printer even when not printing.

The following sounds do not indicate a problem with the printer.

- A suction sound can be heard from the platen

  To prevent the paper from rising, the surface of the platen has vacuum holes that create suction on the paper.

- Roll paper makes a fluttering sound during printing.

  There may be a fluttering sound when large paper is advanced.

- You suddenly hear the sound of cleaning operations.

  Cleaning is automatically performed at specified intervals in order to keep the printer maintained.

- You suddenly hear the sound of ink agitation.

  Ink is automatically agitated after specified intervals to maintain optimal print quality. Agitation takes approximately 1 minute 30 seconds.

  Ink is also agitated automatically at the following times. Please note that no other operations can be performed while "**Agitating the ink**" is on the touch screen.

- After the printer is turned on
- After data transmission
- After ink tank replacement

In other cases, contact your Canon dealer.

Messages advising to check the maintenance cartridge are not cleared

The newly replaced maintenance cartridge is not recognized.

Remove the newly replaced maintenance cartridge, and then reinsert it again firmly.

Replacing the Maintenance Cartridge

The printer consumes a lot of ink

Check 1

Are lots of full-color materials being printed?

In print jobs such as photos, images are filled with color. This consumes a lot of ink. This does not indicate a problem with the printer.

Check 2

Is **System cleaning** being carried out frequently?

System cleaning uses a lot of ink. This is normal. We recommend that you only carry out **System cleaning** after the printer has been transported, if has not been used for a long time, or if there is a problem with the print head.

Check 3

You have just finished initial installation, when more ink is consumed to fill the system.

If using the printer for the first time, or using it after transport, the ink tank will supply an initial fill of ink to the print head.

Although the amount of remaining ink may drop as a result, it does not indicate a problem.

Check 4

Is the print head nozzle blocked?

Check for nozzle clogging.

➡ Checking for Nozzle Clogging

Q

Printed pages are not collected cleanly in the basket

A

Check 1

Is the roll unit in place?

The basket may not be able to catch printed paper properly if the roll unit is in place.

Refer to Example Basket Configurations and try another basket position.

➡ Example Basket Configurations

Check 2

Is the basket in the right position for the media type and size?

The optimal basket position depends on factors such as media type and size and the conditions the printer is being used under.

Refer to Example Basket Configurations and try another basket position.

➡ Example Basket Configurations

When Trim edge first is set, the trimmed paper is drawn into the roll unit

Check

Is the basket in position 1?

If the roll unit is being used as a paper feeder and the basket is in position 1, the paper strip discarded by **Trim edge first** for borderless printing or paper loading may get drawn into the roll unit.

In this situation, refer to Example Basket Configurations and try another position.

Example Basket Configurations

Ink Level Detection

The printer ink tank detects the amount of ink remaining to prevent running out of ink while printing and to avoid printer failure.

Ink Tanks

When using an ink tank refilled with ink, the function for detecting the remaining ink level may not operate properly and printing may stop. If you want to use an ink tank refilled with ink, you need to disable the function for detecting the remaining ink level.

Printing with the ink level detection canceled may lead to printer damage and printing problems. Canon Inc. is not liable for any damage that may occur as a result of refilling ink.

Important

- Once the function for detecting the remaining ink level is disabled, it cannot be restored for that ink tank. To restore the function for detecting the remaining ink level, replace the ink tank with a new ink tank for that printer.
- Repeatedly removing and inserting the same ink tank can cause the contacts between the ink tank and printer to malfunction, ink may leak from the ink tank, and the printer may become damaged.

Releasing ink level detection

Ink level detection will be deactivated if you load ink tanks once emptied.

If **The above ink tank may be an ink tank that ran out of genuine Canon ink or a counterfeit Canon ink tank.** appears on the touch screen, follow the steps below.

1. Move through the screens, performing the actions described in the messages that appear on the touch screen.
2. If an instruction to disable detection of remaining ink appears on the touch screen, hold down the **Stop** button for at least 5 seconds and then release it.

   Ink level detection is now released.

List of Support Code for Error

Support codes appear on the PC when an error occurs.

Support codes are error identification numbers that appear alongside error messages.

If an error occurs, check the support code and follow the recommended steps to resolve the issue.

Support code displayed

- 1000 - 1ZZZ

  1005 100A 100B 100E 100F 1012

  1018 1019 1021 1022 1023 1024

  1025 1051 1052 1054 1055 1056

  1057 1061 1200 1201 1210 1213

  1214 1300 1306 1317 1318 1322

  1323 1324 1325 1401 1403 1408

  1409 140A 140B 140C 140F 1477

  1478 1480 1481 1485 1492 1494

  1495 1500 1551 1552 1570 1571

  1660 168B 1720 1721 1722 1730

  1731 1752 1753 1756 1757 1875

- 2000 - 2ZZZ

  2001 2002 2130 2131 2132

- 3000 - 3ZZZ

  3000 3001 3101 3200 3201 3250

  3306 3311 3312 3313 3314 3315

  3316 3317 3330 3331 3332 3333

  3334 3335 3336 3340 3341 3350

  3351 3352 3414 3415 3416 3417

  3418 3419 3420 3421 3422 3423

  3424

- 4000 - 4ZZZ

4107 4111 4112 4113 4114 4115

4116 4117 4118 4119 4120 4121

4801 4900 4901 4903 4905 4910

4911 4913 4920 4922 4924 4925

4926 4927 4931 4932 4933 4934

4935 4950 4951 4952 4953 4954

4955 4956 4957 4959

- 5000 - 5ZZZ

5106 5200 5A60 5A61 5B16 5B20

5B21 5C00

- 6000 - 6ZZZ

6502 6700 6702 6820 6900 6901

6902 6910 6911 6920 6921 6930

6931 6932 6933 6940 6941 6942

6943 6944 6945 6946

- 7000 - 7ZZZ

7001 7003 7004 7050 7051 7052

- 8000 - 8ZZZ

8200

- 9000 - 9ZZZ

9000 9110

- A000 - ZZZZ

B20A B510

1005

Cause

You have attempted to print on a sheet, but no sheet is loaded.

What to Do

Check the media size and type for the print job on the touch screen, and then tap **OK**.

- Continuing to print
  Tap **Load paper.**, and then load the paper.

  ➡ Loading and Printing on Sheets

- Stopping printing
  To stop printing, tap **Cancel** on the touch screen or press the **Stop** button.

100A

Cause

You have attempted to print on a roll, but no roll is loaded.

What to Do

Tap **Load paper.** on the touch screen, and then load the paper roll and print.

➡ Loading Rolls on the Roll Holder

➡ Loading the Upper Roll on the Printer

Note

- To stop printing, tap **Cancel** on the touch screen or press the **Stop** button.

100B

Cause

Tried to print from **Roll paper 2** but no paper roll has been loaded.

What to Do

Tap **Load paper.** on the touch screen, and then load the paper roll and print.

➡ Loading Rolls on the Roll Holder

➡ Loading the Upper Roll on the Printer

Note

- To stop printing, tap **Cancel** on the touch screen or press the **Stop** button.

100E

Cause

A printer error has occurred.

What to Do

Turn the power off, wait a moment, and then turn the power back on.

If the error appears again, make a note of the detailed error code (ECxx-xxxx) that appears on the touch screen, and then turn off the power and contact a Canon customer service center.

Detailed error codes

EC16-202E

100F

Cause

A printer error has occurred.

What to Do

Turn the power off, wait a moment, and then turn the power back on.

If the error appears again, make a note of the detailed error code (ECxx-xxxx) that appears on the touch screen, and then turn off the power and contact a Canon customer service center.

Detailed error codes

EC21-2F6D

1012

Cause

You have attempted to print on a sheet, but no sheet is loaded.

What to Do

Tap **Load paper.** on the touch screen, and then load cut paper and print.

Loading and Printing on Sheets

Note

- To stop printing, tap **Cancel** on the touch screen or press the **Stop** button.

1018

Cause

The **Roll paper 1** feeder has not been calibrated.

What to Do

Calibrating, please remove the upper roll holder.

1019

Cause

The roll unit feeder has not been calibrated.

What to Do

Calibrating, please remove the roll unit roll holder.

1021

Cause

The printer has received a print job longer than the amount of roll paper left.

What to Do

- Continuing to print
  To continue printing, tap **Print with the loaded paper.** on the touch screen.

  However, the roll paper may run out during the print job and you may not be able to print all of the document.

- Replacing paper
  Tap **Replace the paper and print** on the touch screen.

  Change the **Paper Source** in the printer driver, or replace the paper with paper of the right length for the print job, and then try again.

  If using the Media Take-up Unit, tap **Cancel** on the touch screen to stop printing.

  Remove the printed paper from the Media Take-up Unit, replace the paper with paper of the right length for the print job, and then try again.

  ➡ Removing the Upper Roll from the Printer

  ➡ Loading the Upper Roll on the Printer

  ➡ Removing Printed Paper from the Roll Unit

- Stopping printing
  To stop printing, tap **Cancel** on the touch screen or press the **Stop** button.

1022

Cause

Received a print job that is longer than the paper length remaining on **Roll paper 1**.

What to Do

- Continuing to print
  To continue printing, tap **Print with the loaded paper.** on the touch screen.

  However, the roll paper may run out during the print job and you may not be able to print all of the document.

- Replacing paper
  Tap **Replace the paper and print** on the touch screen.

  Change the **Paper Source** in the printer driver, or replace the paper with paper of the right length for the print job, and then try again.

  If using the Media Take-up Unit, tap **Cancel** on the touch screen to stop printing.

  Remove the printed paper from the Media Take-up Unit, replace the paper with paper of the right length for the print job, and then try again.

  ➡ Removing the Upper Roll from the Printer

  ➡ Loading the Upper Roll on the Printer

  ➡ Removing Printed Paper from the Roll Unit

- Stopping printing
  To stop printing, tap **Cancel** on the touch screen or press the **Stop** button.

1023

Cause

Received a print job that is longer than the paper length remaining on **Roll paper 2**.

What to Do

- Continuing to print
  To continue printing, tap **Print with the loaded paper.** on the touch screen.

  However, the roll paper may run out during the print job and you may not be able to print all of the document.

- Replacing paper
  Tap **Replace the paper and print** on the touch screen.

  Change the **Paper Source** in the printer driver, or replace the paper with paper of the right length for the print job, and then try again.

  ➡ Removing the Lower Roll from the Roll Unit (Option)

  ➡ Loading the Lower Roll on the Roll Unit (Option)

- Stopping printing
  To stop printing, tap **Cancel** on the touch screen or press the **Stop** button.

1024

Cause

Possible causes include the following.

- The roll is empty.
- There is remaining roll paper, but because it could not be advanced, it could not be detected.

What to Do

- The roll paper has run out

  Follow the steps below to replace the used roll with a new roll of the same type and size.

  1. Lift up the release lever and remove the roll paper.

     ➡ Removing the Upper Roll from the Printer

     ➡ Removing Rolls From the Roll Holder

  2. Load the new roll.

     ➡ Loading Rolls on the Roll Holder

     ➡ Loading the Upper Roll on the Printer

  3. If no barcode was printed on the roll, specify the paper type.

     ➡ Changing the Type of Paper

  4. If **Manage remaining roll amount** is set to **Enable** in the touch screen menu and there is no barcode printed on the paper roll, set the paper length.

     ➡ Specifying the Paper Length

  5. If "**There is a job whose printing is not complete. Do you want to print this job?**" appears on the touch screen, tap **Yes**. Printing will resume, starting from the page on which the error occurred.

- Feed stopped because the end of the paper roll is attached to the core with tape

  Remove the used roll paper and insert a new roll paper.

  ➡ Removing the Upper Roll from the Printer

  ➡ Removing Rolls From the Roll Holder

  ➡ Loading and Printing on Rolls

- Feed stopped because the remaining paper roll is too heavy

  It may be helpful to change the printing mode, which will change the paper feed timing.

  If using Windows, select a higher **Print Quality** setting under **Advanced Settings** in the printer driver.

  If using Mac OS, select **Quality & Media** in the printer driver, and then select a higher **Print Quality** setting.

  ➡ Setting the Print Quality Level (Custom) （Windows）

  ➡ Setting the Print Quality Level (Custom) （Mac OS）

Note

- To stop printing, press the **Stop** button.

1025

Cause

Roll paper 2 is empty.

What to Do

Follow the steps below to replace the used roll with a new roll of the same type and size.

1. Lift up the release lever and remove the roll paper.

   ➡ Removing the Lower Roll from the Roll Unit (Option)

   ➡ Removing Rolls From the Roll Holder

2. Load the new roll.

   ➡ Loading Rolls on the Roll Holder

   ➡ Loading the Lower Roll on the Roll Unit (Option)

3. If no barcode was printed on the roll, specify the paper type.

   ➡ Changing the Type of Paper

4. If **Manage remaining roll amount** is set to **On** in the touch screen menu and there is no barcode printed on the paper roll, set the paper length.

   ➡ Specifying the Paper Length

5. If "**There is a job whose printing is not complete. Do you want to print this job?**" appears on the touch screen, tap **Yes**. Printing will resume, starting from the page on which the error occurred.

Note

- To stop printing, press the **Stop** button.

1051

Cause

The media type specified in the printer driver is not the same as the media type loaded in the printer.

What to Do

You can continue to print, but note that this error may cause problems in the printing results.

1052

Cause

The width of the roll paper set in **Fit Roll Paper Width** in the printer driver is not the same as the width of the roll paper loaded in the printer.

What to Do

You can continue to print, but note that this error may cause problems in the printing results.

1054

Cause

The paper in the printer is smaller than the paper size set in the printer driver.

What to Do

You can continue to print, but note that this error may cause problems in the printing results.

1055

Cause

The paper size in the printer cannot be printed borderless.

What to Do

You can continue to print, but note that this error may cause problems in the printing results.

1056

Cause

The paper position is not suitable for borderless printing.

What to Do

You can continue to print, but note that this error may cause problems in the printing results.

1057

Cause

The paper position is not suitable for borderless printing.

What to Do

You can continue to print, but note that this error may cause problems in the printing results.

1061

Cause

The media type specified in the printer driver is not the same as the media type loaded in the printer.

What to Do

Tap **OK** on the touch screen.

Make sure that the media type that appears on the touch screen is the same as the media type that has been loaded, and then tap **OK**.

- Printing again
  Follow the steps below to match the media type in the printer driver and the media type specified for the printer.
  1. Tap **Cancel** on the touch screen to stop printing.
  2. Change the media type in the printer driver settings to the media type loaded in the printer, and then try again.
- Replacing paper
  Follow the steps below to match the media type in the printer driver and the media type specified for the printer.
  1. Tap **Replace the paper and print** on the touch screen.
  2. Load the printer with the media type specified in the printer driver.

     ➡ Loading and Printing on Rolls

     ➡ Loading and Printing on Sheets
- Printing without changes
  To continue printing, tap **Print with the loaded paper.** on the touch screen.

  However, note that this error may cause paper jams and affect the printing quality.

1200

Cause

Top cover or print head locking cover is open.

What to Do

Open the top cover and make sure the print head locking cover is closed properly.

Make sure there are no foreign objects caught in the top cover, and then close the top cover.

If this error appears again, close the top cover, turn the power off, wait a moment, and then turn the power back on.

Note

- If installing a print head, close the top cover after finishing.

1201

Cause

The ink tank cover is open.

What to Do

Close the ink tank cover.

1210

Cause

The ink tank cover is open.

What to Do

Close the ink tank cover.

1213

Cause

The release lever is raised.

What to Do

Lower the release lever.

If the error occurs again, turn off the printer and wait a while before restoring power.

1214

Cause

A printer error has occurred.

What to Do

Turn the power off, wait a moment, and then turn the power back on.

If the error appears again, make a note of the detailed error code (ECxx-xxxx) that appears on the touch screen, and then turn off the power and contact a Canon customer service center.

Detailed error codes

EC19-2F21 EC51-2F38

1300

Cause

Paper jammed inside the printer while printing.

What to Do

1. Release the release lever and remove the jammed paper.

   ➡ Clearing Jammed Roll Paper

   ➡ Clearing a Jammed Sheet

2. Load the paper.

   ➡ Loading the Upper Roll on the Printer

   ➡ Loading Sheets in the Printer

3. If "**There is a job whose printing is not complete. Do you want to print this job?**" appears on the touch screen, tap **Yes**.

   Printing will resume, starting from the page on which the error occurred.

1306

Cause

A print job for rolls was received when a sheet is loaded.

What to Do

Follow these steps to load and print on a roll.

1. To remove the cut paper, tap **Remove paper** on the touch screen.

   ➡ Removing Sheets

2. Load a new roll.

   ➡ Loading the Upper Roll on the Printer

Note

- To stop printing, tap **Cancel** on the touch screen or press the **Stop** button.

1317

Cause

Paper loaded crooked was detected when the paper was advanced.

What to Do

Lift up the release lever and reload the paper.

➡ Loading the Upper Roll on the Printer

➡ Loading the Lower Roll on the Roll Unit (Option)

➡ Loading Sheets in the Printer

If this error appears again even after reloading the paper roll, remove the roll holder from the printer, insert the paper roll firmly into the roll holder until it is up against the flange, and then insert the roll holder into the printer.

➡ Loading Rolls on the Roll Holder

Important

- If this message continues to appear even after taking the steps above, or if you do not want this message to appear, set **Skew detection accuracy** in the printer menu to **Off** or **Loose**. However, note that the paper will be printed skewed, which could cause paper jams and abnormal print results, or dirty the platen and the reverse of the next printed sheet.

1318

Cause

A printer error has occurred.

What to Do

Turn the power off, wait a moment, and then turn the power back on.

If the error appears again, make a note of the detailed error code (ECxx-xxxx) that appears on the touch screen, and then turn off the power and contact a Canon customer service center.

Detailed error codes

EC0F-2F93

1322

Cause

Cannot detect paper size because paper is not in the correct position or because curled paper has been loaded.

What to Do

Lift up the release lever and reload the paper.

➡ Loading the Upper Roll on the Printer

➡ Loading the Lower Roll on the Roll Unit (Option)

➡ Loading Sheets in the Printer

If "**There is a job whose printing is not complete. Do you want to print this job?**" appears on the touch screen, tap **Yes**.

Printing will resume, starting from the page on which the error occurred.

Note

- If this error appears again even after reloading the paper roll, remove the roll holder from the printer, insert the paper roll firmly into the roll holder until it is up against the flange, and then insert the roll holder into the printer.

  ➡ Loading Rolls on the Roll Holder

- This error might also appear if the platen has been dirtied by ink or another substance, or if the size of clear film could not be detected. In this case, open the top cover and clean the entire platen area.

  ➡ Cleaning Inside the Top Cover

1323

Cause

An unsuitable paper size has been loaded.

What to Do

Lift up the release lever and reload paper of suitable size.

Paper Sizes

Note

- Load unused A4/letter size or larger paper if printing calibration and nozzle check patterns. Each calibration may take several sheets of paper.

1324

Cause

A print job for printing on sheets was sent when a roll is loaded.

What to Do

Follow the steps below to print again.

1. Tap **Remove paper** on the touch screen to stop printing.
2. Remove the paper roll, load cut paper of the size and type specified in the printer driver, and then try again.

   ➡ Removing the Upper Roll from the Printer

   ➡ Loading and Printing on Sheets

Note

- To stop printing, tap **Cancel** on the touch screen or press the **Stop** button.

1325

Cause

Received cut paper print data when using roll paper on roll equipment.

What to Do

Follow the steps below to print again.

1. Tap **Cancel** on the touch screen to stop printing.
2. Remove the paper roll, load cut paper of the size and type specified in the printer driver, and then try again.

   ➡ Removing Printed Paper from the Roll Unit

   ➡ Loading and Printing on Sheets

1401

Cause

Failed to recognize print head.

What to Do

Open the top cover and reattach the print head.

➡ Replacing the Print Head

1403

Cause

There is a problem with the print head.

What to Do

Tap **OK** on the touch screen, and then replace the current print head with a new one.

➡ Replacing the Print Head

If you do not have a replacement print head ready, turn off the power and replace the print head once you have the new one.

1408

Cause

There is a problem with the print head.

What to Do

Tap **OK** on the touch screen, and then replace the current print head with a new one.

➡ Replacing the Print Head

If you do not have a replacement print head ready, turn off the power and replace the print head once you have the new one.

1409

Cause

There is a problem with the print head.

What to Do

Tap **OK** on the touch screen, and then replace the current print head with a new one.

➡ Replacing the Print Head

If you do not have a replacement print head ready, turn off the power and replace the print head once you have the new one.

140A

Cause

There is a problem with the print head.

What to Do

Tap **OK** on the touch screen, and then replace the current print head with a new one.

➡ Replacing the Print Head

If you do not have a replacement print head ready, turn off the power and replace the print head once you have the new one.

140B

Cause

Failed to recognize print head.

What to Do

Open the top cover and reattach the print head.

➡ Replacing the Print Head

140C

Cause

There is a problem with the print head.

What to Do

Turn off the power, wait a moment, and then turn it back on.

140F

Cause

There is a problem with the print head.

What to Do

Tap **OK** on the touch screen, and then replace the current print head with a new one.

➡ Replacing the Print Head

If you do not have a replacement print head ready, turn off the power and replace the print head once you have the new one.

1477

Cause

There is a problem with the print head.

What to Do

Open the top cover and replace theprint head with a new one.

➡ Replacing the Print Head

1478

Cause

There is a problem with the print head.

What to Do

Tap **OK** on the touch screen, and then replace the current print head with a new one.

➡ Replacing the Print Head

If you do not have a replacement print head ready, turn off the power and replace the print head once you have the new one.

1480

Cause

The attached print head was previously used in a different model.

What to Do

Attach the correct print head.

➡ Replacing the Print Head

1481

Cause

The attached print head was previously used in a model that uses a different ink set.

What to Do

Attach the correct print head.

➡ Replacing the Print Head

1485

Cause

Cannot use attached print head.

What to Do

Attach the correct print head.

➡ Replacing the Print Head

1492

Cause

A printer error has occurred.

What to Do

Turn the power off, wait a moment, and then turn the power back on.

If the error appears again, make a note of the detailed error code (ECxx-xxxx) that appears on the touch screen, and then turn off the power and contact a Canon customer service center.

Detailed error codes

EC3F-2F40 EC3F-2F41

1494

Cause

There may be a problem with the print head.

What to Do

Turn off the power, wait a moment, and then turn it back on.

If the error appears again, remove and reattach the print head.

➡ Replacing the Print Head

If that does not get rid of the error, replace the print head with a new one.

1495

Cause

The print head nozzle is blocked.

What to Do

Follow the steps below to clean the print head.

1. Tap **Cancel** on the touch screen to stop printing.
2. Clean the print head.

   Cleaning the Print Head

If this message still appears when printing, replace the print head.

Replacing the Print Head

Important

- To continue printing, use the touch screen and tap **Continue printing**. However, the print results may not be satisfactory.

1500

Cause

The ink in the ink tank is running low.

What to Do

Prepare a new ink tank.

1551

Cause

A genuine Canon ink tank with a history of past use has been detected.

What to Do

To dismiss the message, tap **OK** on the touch screen.

1552

Cause

A genuine Canon ink tank has been inserted.

What to Do

To dismiss the message, tap **OK** on the touch screen.

1570

Cause

The ink in the ink tank has run out.

What to Do

Open the ink tank cover, and then replace the ink tank before the ink in the sub-ink tank of this printer becomes insufficient.

Replacing Ink Tanks

Note

- You can replace the ink tank even while printing.

1571

Cause

Ink tank removed during printing.

What to Do

If replacing the ink tank, insert a new ink tank.

➡ Replacing Ink Tanks

1660

Cause

Ink tank not inserted.

What to Do

Insert the ink tank correctly.

➡ Replacing Ink Tanks

168B

Cause

The ink tank cannot be recognized.

Printing cannot be executed because the ink tank may not be compatible with this printer.

What to Do

Install the appropriate ink tank.

1720

Cause

The maintenance cartridge is full.

It needs to be replaced.

What to Do

Replace the maintenance cartridge.

➡ Replacing the Maintenance Cartridge

1721

Cause

The maintenance cartridge is not installed.

What to Do

Install the maintenance cartridge.

➡ Replacing the Maintenance Cartridge

1722

Cause

Incorrect type of maintenance cartridge.

What to Do

Insert the correct maintenance cartridge.

➡ Replacing the Maintenance Cartridge

If this error continues to appear, contact a Canon customer service center.

1730

Cause

The ink tank may be an ink tank that ran out of genuine Canon ink or a counterfeit Canon ink tank.

What to Do

To print, you must replace the ink tank or disable the function for detecting the remaining ink level.

To disable the function for detecting the remaining ink level, press and hold the printer's **Stop** button for at least 5 seconds, and then release it.

By this operation, the fact that you have disabled the function for detecting the remaining ink level will be memorized. Please be advised that Canon shall not be liable for any malfunction or trouble caused by continuation of printing under the ink out condition or by using refilled ink tanks.

Note

- If the function for detecting the remaining ink level is disabled, the ink tank in gray is displayed on the LCD when checking the current ink level.

To report the counterfeit ink tank, access Canon website from the following link.

Report Counterfeit

1731

Cause

Non-genuine Canon ink tank has been detected.

What to Do

To print, you must replace the ink tank or disable the function for detecting the remaining ink level.

To disable the function for detecting the remaining ink level, press and hold the printer's **Stop** button for at least 5 seconds, and then release it.

By this operation, the fact that you have disabled the function for detecting the remaining ink level will be memorized. Please be advised that Canon shall not be liable for any malfunction or trouble caused by using a non-genuine Canon ink tank.

Note

- If the function for detecting the remaining ink level is disabled, the ink tank in gray is displayed on the LCD when checking the current ink level.

To report the counterfeit ink tank, access Canon website from the following link.

Report Counterfeit

1752

Cause

The ink has run out.

What to Do

Open the ink tank cover, and then replace the ink tank.

➡ Replacing Ink Tanks

1753

Cause

The remaining level of the ink cannot be correctly detected.

What to Do

Replace the ink tank. Printing will restart.

➡ Replacing Ink Tanks

An ink tank that was once empty is installed.

If you want to continue printing, you need to disable the function for detecting the remaining ink level.

To disable this function, press and hold the printer's **Stop** button for at least 5 seconds, and then release it.

By this operation, the fact that you have disabled the function for detecting the remaining ink level will be memorized.

Please be advised that Canon shall not be liable for any malfunction or trouble caused by continuation of printing under the ink out condition or by using refilled ink tanks.

1756

Cause

The ink may become insufficient.

What to Do

To perform the next process or to continue the specified process, replace the ink tank.

➡ Replacing Ink Tanks

1757

Cause

Cannot fill ink reserve tank.

What to Do

Check the touch screen, remove the ink tank for the affected color, and then reinsert it.

If the inserted ink tank is empty, replace it with a new ink tank.

➡ Replacing Ink Tanks

1875

Cause

Attempted to print on roll unit roll paper, but roll unit is not powered on or has been removed.

What to Do

Turn off the power and check the connection with the roll unit.

➡ Roll Unit

➡ Switching Roll Unit Modes

2001

Cause

An incompatible device is connected.

What to Do

Check the device connected to the USB flash drive port.

Only USB flash drive can be connected to this device for direct printing.

2002

Cause

An incompatible USB hub is connected.

What to Do

If USB flash drive is connected to this device through a USB hub, remove the USB hub.

Connect the USB flash drive directly to this device.

2130

Cause

The roll paper width set in the print job is not the same as the width of the roll paper in the printer.

What to Do

Tap **OK** on the touch screen.

Check the **Page size** and **Type** in the print job that appears on the touch screen, and then tap **OK**.

- Continuing to print
  Tap **Print with the loaded paper.** to go ahead and print on the loaded paper.

  However, note that this error may cause paper jams and affect the printing quality.
- Replacing the paper roll and printing
  Tap **Replace the paper and print**, and then replace the paper with roll paper of the width specified in the print job **Page size** settings.

  ➡ Removing the Upper Roll from the Printer

  ➡ Removing the Lower Roll from the Roll Unit (Option)

  ➡ Removing Rolls From the Roll Holder

  ➡ Loading Rolls on the Roll Holder

  ➡ Loading the Upper Roll on the Printer

  ➡ Loading the Lower Roll on the Roll Unit (Option)
- Stopping printing
  Tap **Cancel** on the touch screen or press the **Stop** button.

Note

- To change print settings in Windows, select **Fit Roll Paper Width** in the printer driver and set the roll paper width in the dialog box that appears.
- To change print settings in Mac OS, open the printer driver and select **Fit Roll Paper Width**, and then set the roll paper width in that panel to the width of the paper loaded in the printer.
- To suppress this message, set **Detect paper setting mismatch** in the touch screen menu to **Do not detect**.

  ➡ Menu Structure

2131

Cause

The roll paper loaded in the printer is narrower than the roll paper width in the print job.

What to Do

Check the **Page size** and **Type** in the print job that appears on the touch screen, and then tap **OK**.

- Continuing to print
  Tap **Print with the loaded paper.** to go ahead and print on the loaded paper.

  However, note that this error may affect the printing quality.
- Replacing the paper roll and printing
  Tap **Replace the paper and print**, and then replace the paper with roll paper of the width specified in the print job **Page size** settings.

  ➡ Removing the Upper Roll from the Printer

  ➡ Removing the Lower Roll from the Roll Unit (Option)

  ➡ Removing Rolls From the Roll Holder

  ➡ Loading Rolls on the Roll Holder

  ➡ Loading the Upper Roll on the Printer

  ➡ Loading the Lower Roll on the Roll Unit (Option)
- Stopping printing
  Tap **Cancel** on the touch screen or press the **Stop** button.

Note

- To change print settings in Windows, select **Fit Roll Paper Width** in the printer driver and set the roll paper width in the dialog box that appears.
- To change print settings in Mac OS, open the printer driver and select **Fit Roll Paper Width**, and then set the roll paper width in that panel to the width of the paper loaded in the printer.
- To suppress this message, set **Detect paper setting mismatch** in the touch screen menu to **Do not detect**. However, note that this error may affect the printing quality.

  ➡ Menu Structure

2132

Cause

Cannot print internal printer data, such as test prints, for the following reasons.

- The paper roll loaded in the printer is too small.
- The cut paper loaded in the printer is the wrong size or type.

What to Do

- Roll
  Tap **Replace the paper and print** on the touch screen, or lift up the release lever and replace the paper with paper of the correct size.

  To stop printing, tap **Cancel** or press the **Stop** button.
- Sheet
  Lift up the release lever and load paper of the same size and type as the first page.

  To stop printing, press the **Stop** button.

3000

Cause

The print head has not been calibrated.

What to Do

Print head alignment is recommended.

Adjusting the Print Head

Note

- This message will appear until **Print head alignment** is carried out.

3001

Cause

The print head nozzle is becoming blocked.

What to Do

Check the printed materials.

If the printed materials are scratched, clean the print head.

➡ Cleaning the Print Head

3101

Cause

Common Calibration or **Unique Calibration** is now recommended.

This message appears when the **Calibration guide setting** is set to **Enable** and any of the following apply.

- The printer is loaded with a media type not suitable for **Color Calibration**, and the specified conditions have been met since the last time **Common Calibration** was carried out.
- The printer is loaded with a media type suitable for **Color Calibration**, but there are no **Color Calibration** results for that media type and the specified conditions have been met since the last time **Common Calibration** was carried out.
- The printer is loaded with a media type suitable for **Color Calibration**, but there are no **Color Calibration** results for that media type and also no **Common Calibration** results.

What to Do

Carry out **Common Calibration** as needed.

Performing Color Calibration

Note

- To suppress this message, set the **Calibration guide setting** in the touch screen menu to **Disable**.

  Menu Structure

3200

Cause

It is almost time to replace consumables for which service is required.

What to Do

This can used for a little while, until the message "**Part replacement needed.**" appears.

Contact your Canon dealer for assistance.

3201

Cause

It is past the recommended time to replace consumables for which service is required.

What to Do

Contact your Canon dealer for assistance.

3250

Cause

The maintenance cartridge is almost full.

What to Do

Prepare a new maintenance cartridge because an error may occur if you continue to use the printer while the maintenance cartridge is full.

➡ Replacing the Maintenance Cartridge

3306

Cause

Media information cannot be recognized because the printer media information is corrupt.

What to Do

Start the **Media Configuration Tool**, and then recover the media information.

➡ Media Configuration Tool Guide (Windows)

➡ Media Configuration Tool Guide (Mac OS)

To set the **Media Configuration Tool** to recovery mode, open the **Media Configuration Tool**, select this device and then click **OK**.

Select and load the media information backup file.

If you do not have a media information backup file, contact a Canon customer service center.

3311

Cause

Incorrect print data.

Illegal number of parameters.

What to Do

Defective print data, please check the print results.

If using printing software such as RIP (Raster Image Processor), contact the software manufacturer.

3312

Cause

Incorrect print data.

Required items have been omitted.

What to Do

Defective print data, please check the print results.

If using printing software such as RIP (Raster Image Processor), contact the software manufacturer.

3313

Cause

Incorrect print data.

Data out of range.

What to Do

Defective print data, please check the print results.

If using printing software such as RIP (Raster Image Processor), contact the software manufacturer.

3314

Cause

Incorrect print data.

Resolution value out of range.

What to Do

Defective print data, please check the print results.

If using printing software such as RIP (Raster Image Processor), contact the software manufacturer.

3315

Cause

Incorrect print data.

Compression method value out of range.

What to Do

Defective print data, please check the print results.

If using printing software such as RIP (Raster Image Processor), contact the software manufacturer.

3316

Cause

Incorrect print data.

Incorrect data formatting (color sequence, bit count).

What to Do

Defective print data, please check the print results.

If using printing software such as RIP (Raster Image Processor), contact the software manufacturer.

3317

Cause

Incorrect print data.

Illegal combination of resolution and image data format.

What to Do

Defective print data, please check the print results.

If using printing software such as RIP (Raster Image Processor), contact the software manufacturer.

3330

Cause

Print data may be corrupt.

What to Do

Check the print job.

3331

Cause

Print results may be abnormal as there is a large volume of print data.

What to Do

Check the print job.

3332

Cause

Unsupported JPEG data format.

What to Do

Print from a PC.

3333

Cause

Unsupported JPEG data format.

What to Do

Print from a PC.

3334

Cause

PDF data is print protected.

What to Do

Open the PDF file in Adobe Acrobat and make sure it can be printed.

3335

Cause

Corrupt PDF file.

What to Do

Open the PDF file in Adobe Acrobat and check it.

The file can also be printed from Adobe Acrobat.

3336

Cause

Fonts were substituted because the fonts in the PDF file are not embedded or installed.

What to Do

Set the fonts used in the PDF file to be embedded, and then save again.

3340

Cause

Print data contains no image processing parameters.

What to Do

Check the print job settings.

3341

Cause

Print data contains illegal image processing table.

What to Do

Check the print job image processing table.

3350

Cause

Free space on the personal box on the printer hard disk is less than 1 GB.

What to Do

Delete unneeded jobs stored in personal boxes.

➡ Deleting Saved Jobs

3351

Cause

100 jobs are stored in the Personal Box.

What to Do

Delete any unneeded jobs saved in the personal box.

➡ Deleting Saved Jobs

3352

Cause

The printer hard disk is full, so the job will only be printed.

(The print job will not be saved to the hard disk.)

What to Do

To save the print job, delete any unneeded jobs saved in the personal box.

➡ Deleting Saved Jobs

3414

Cause

Communication with mail server failed.

What to Do

Tap **OK** on the touch screen to dismiss the error.

Check that the address and port numbers of the sending mail server (SMTP server) are correct in the RemoteUI mail server settings.

➡ Setting Mail Server

If this does not resolve the error, check the status of the mail server.

Contact the mail server administrator to check the server settings and status.

3415

Cause

Communication with mail server failed.

What to Do

Tap **OK** on the touch screen to dismiss the error.

Check that the address and port numbers of the receiving mail server (POP3 server) are correct in the RemoteUI mail server settings.

➡ Setting Mail Server

If this does not resolve the error, check the status of the mail server.

Contact the mail server administrator to check the server settings and status.

3416

Cause

Communication with mail server failed.

What to Do

Tap **OK** on the touch screen to dismiss the error.

Check that the mail server and device secure connection (SSL) settings match.

Check the secure connection (SSL) settings in RemoteUI.

➡ Setting Mail Server

Contact the mail server administrator to configure a secure connection (SSL) to the mail server.

3417

Cause

Communication with mail server failed.

What to Do

Tap **OK** on the touch screen to dismiss the error.

Check that the mail server and device secure connection (SSL) settings match.

Check the secure connection (SSL) settings in RemoteUI.

➡ Setting Mail Server

Contact the mail server administrator to configure a secure connection (SSL) to the mail server.

3418

Cause

Communication with mail server failed.

What to Do

Tap **OK** on the touch screen to dismiss the error.

Check that the sending mail server (SMTP server) is correctly configured in the RemoteUI mail server settings.

➡ Setting Mail Server

If this does not resolve the error, check the status of the mail server.

Contact the mail server administrator to check the server settings and status.

3419

Cause

Communication with mail server failed.

What to Do

Tap **OK** on the touch screen to dismiss the error.

Check that the sending account and password are correctly configured in the RemoteUI mail server settings.

➡ Setting Mail Server

If this does not resolve the error, check the status of the mail server.

Contact the mail server administrator to check the server settings and status.

3420

Cause

Communication with mail server failed.

What to Do

Tap **OK** on the touch screen to dismiss the error.

Check that the receiving mail server (POP3 server) is correctly configured in the RemoteUI mail server settings.

➡ Setting Mail Server

If this does not resolve the error, check the status of the mail server.

Contact the mail server administrator to check the server settings and status.

3421

Cause

Communication with mail server failed.

What to Do

Tap **OK** on the touch screen to dismiss the error.

Check that the receiving account and password are correctly configured in the RemoteUI mail server settings.

➡ Setting Mail Server

If this does not resolve the error, check the status of the mail server.

Contact the mail server administrator to check the server settings and status.

3422

Cause

Communication with mail server failed.

What to Do

Tap **OK** on the touch screen to dismiss the error.

Check that the settings on the mail server and the APOP settings on this device match.

Check this device's APOP settings in RemoteUI.

➡ Setting Mail Server

Contact the mail server administrator for configuring APOP on the mail server.

3423

Cause

Communication with mail server failed.

What to Do

Tap **OK** on the touch screen to dismiss the error.

Check if the RemoteUI mail server settings are correct.

➡ Setting Mail Server

If this does not resolve the error, check the status of the mail server.

Contact the mail server administrator to check the server settings and status.

3424

Cause

Sending mail failed.

What to Do

Tap **OK** on the touch screen to dismiss the error.

Specify the correct destination mail address and try again

4107

Cause

Possible causes include the following.

- Received print job for upper roll paper while lower roll paper is in use.
- Received print job for lower roll paper while upper roll paper is in use.

What to Do

Tap **OK** on the touch screen to dismiss the error.

Remove the printed matter, and then try again.

4111

Cause

The media type specified is incompatible with this device.

What to Do

Tap **OK** on the touch screen to dismiss the error.

Check the media type settings, and then try again.

4112

Cause

Received a print job specifying paper feed from the roll unit, but the roll unit is not set to paper feed.

What to Do

To stop printing, tap **OK** on the touch screen or press the **Stop** button.

Check the roll unit settings, and then try again.

➡ Switching Roll Unit Modes

4113

Cause

Cannot print borderless for the following reasons.

- Printer driver is not set to **Fit Roll Paper Width**.
- Roll paper is not wide enough, or the paper is out of position.

What to Do

- Stopping printing
  Tap **Cancel** on the touch screen.
- Replacing paper
  Follow the steps below to replace the printer paper with paper that can be printed borderless.
  1. Tap **Replace the paper and print** on the touch screen, then remove the roll paper.
     - Removing the Upper Roll from the Printer
     - Removing the Lower Roll from the Roll Unit (Option)
     - Removing Rolls From the Roll Holder
  2. Replace the printer paper with paper that can be printed borderless.
     - Loading Rolls on the Roll Holder
     - Loading the Upper Roll on the Printer
     - Loading the Lower Roll on the Roll Unit (Option)
- Printing with a border
  Tap **Print with border** on the touch screen.

  Printing with a border is now enabled.

4114

Cause

The paper position is not suitable for borderless printing.

What to Do

- Stopping printing
  Tap **Cancel** on the touch screen.
- Replacing paper
  Follow the steps below to replace the printer paper with paper that can be printed borderless.
  1. Tap **Replace the paper and print** on the touch screen, then remove the roll paper.
     - Removing the Upper Roll from the Printer
     - Removing the Lower Roll from the Roll Unit (Option)
     - Removing Rolls From the Roll Holder
  2. Replace the printer paper with paper that can be printed borderless.
     - Loading Rolls on the Roll Holder
     - Loading the Upper Roll on the Printer
     - Loading the Lower Roll on the Roll Unit (Option)
- Printing with a border
  Tap **Print with border** on the touch screen.

  Printing with a border is now enabled.

Note

- Because paper expands or contracts depending on the environment of use, it may become narrower or wider than the supported width for borderless printing.

  Use each media type under the appropriate usage conditions. See the media information list for usage conditions.

  - Paper Information List

4115

Cause

The paper in the printer cannot be printed borderless.

What to Do

- Stopping printing
  Tap **Cancel** on the touch screen.
- Replacing paper
  Follow the steps below to replace the printer paper with paper that can be printed borderless.
  1. Tap **Replace the paper and print** on the touch screen, then remove the roll paper.
     ➡ Removing the Upper Roll from the Printer
     ➡ Removing Rolls From the Roll Holder
  2. Replace the printer paper with paper that can be printed borderless.
     ➡ Loading Rolls on the Roll Holder
     ➡ Loading the Upper Roll on the Printer
- Printing with a border
  Tap **Print with border** on the touch screen.

  Printing with a border is now enabled.

4116

Cause

The paper is loaded askew.

What to Do

- Reloading paper
  Tap **Replace the paper and print** on the touch screen, and then load the paper so that the edges are inside the borderless printing ink grooves.

  Insert the roll paper firmly until it is against the roll holder flange.

  Loading Rolls on the Roll Holder

- Printing with a border
  Tap **Print with border** on the touch screen.

  Printing with a border is now enabled.

- Stopping printing
  Tap **Cancel** on the touch screen to stop printing.

Note

- To force the printer to print, set **Detect paper setting mismatch** in the touch screen menu to **Do not detect**.

  However, note that this error may affect the printing quality.

4117

Cause

The print job received specifies a type or width of paper that is not compatible with borderless printing.

What to Do

- Changing the print job settings
  Follow these steps to change the settings of the print job to enable borderless printing.

1. Tap **Cancel** on the touch screen to stop printing.
2. Check that the printer driver for the printer has been selected, and then try again.

   See the media information list for media types compatible with borderless printing.

   ➡ Paper Information List

- Printing with a border
  Tap **Print with border** on the touch screen.

  Printing with a border is now enabled.

Note

- To force the printer to print, set **Detect paper setting mismatch** in the touch screen menu to **Do not detect**.

  However, note that this error may affect the printing quality.

4118

Cause

The paper size in the printer cannot be printed borderless.

What to Do

- Stopping printing
  Tap **Cancel** on the touch screen to stop printing.
- Printing with a border
  Tap **Print with border** on the touch screen.

  Printing with a border is now enabled.

Note

- See the media information list for media types compatible with borderless printing.

  ➡ Paper Information List

4119

Cause

Cannot print borderless because the paper is out of position.

What to Do

- Reloading paper
  Lift up the release lever and reload the roll paper.

  ➡ Loading the Upper Roll on the Printer

  ➡ Loading the Lower Roll on the Roll Unit (Option)

- Printing with a border
  Tap **Print with border** on the touch screen.

  Printing with a border is now enabled.

- Stopping printing
  Tap **Cancel** on the touch screen to stop printing.

4120

Cause

The print job received specifies a type or width of paper that is not compatible with borderless printing.

What to Do

- Changing the print job settings

  Follow these steps to change the settings of the print job to enable borderless printing.

  1. Tap **Cancel** on the touch screen to stop printing.
  2. Check that the printer driver for the printer has been selected, and then try again.

     See the media information list for media types compatible with borderless printing.

     ➡ Paper Information List

- Printing with a border

  Tap **Print with border** on the touch screen.

  Printing with a border is now enabled.

Note

- To force the printer to print, set **Detect paper setting mismatch** in the touch screen menu to **Do not detect**.

  However, note that this error may affect the printing quality.

4121

Cause

Cannot print borderless for the following reasons.

- **Fit Roll Paper Width** is not specified in the printer driver.
- Roll paper is not wide enough, or the paper is out of position.

What to Do

- Stopping printing
  Tap **Cancel** on the touch screen to stop printing.
- Printing with a border
  Tap **Print with border** on the touch screen.

  Printing with a border is now enabled.

4801

Cause

A printer error has occurred.

What to Do

Turn the power off, wait a moment, and then turn the power back on.

If the error appears again, make a note of the detailed error code (ECxx-xxxx) that appears on the touch screen, and then turn off the power and contact a Canon customer service center.

Detailed error codes

EC01-2F90	EC01-2F95	EC04-2F31	EC04-2F91	EC05-2F92	EC06-2F9A
EC06-2F9B	EC06-2F9C	EC07-2F19	EC0F-2F96	EC11-2F2A	EC12-2F29
EC12-2F2B	EC12-2F2C	EC13-2F17	EC15-2E23	EC16-2021	EC16-2022
EC16-2027	EC16-202A	EC16-2038	EC17-2023	EC17-2024	EC17-2028
EC17-2029	EC17-2039	EC1B-2030	EC1B-2031	EC1B-2032	EC1B-2033
EC1C-2034	EC1C-2035	EC1C-2036	EC1C-2037	EC21-2F51	EC21-2F54
EC21-2F57	EC21-2F59	EC21-2F5B	EC21-2F5D	EC21-2F61	EC21-2F64
EC21-2F66	EC21-2F67	EC21-2F68	EC21-2F6E	EC21-2F70	EC21-2F71
EC21-2F72	EC21-2F7D	EC22-2F30	EC22-2F47	EC23-260E	EC23-260F
EC23-2F11	EC23-2F18	EC23-2F32	EC25-2F16	EC31-2F09	EC31-2F10
EC31-2F1B	EC31-2F1C	EC31-2F1D	EC31-2F1E	EC31-2F1F	EC31-2F22
EC31-2F23	EC31-2F94	EC33-2601	EC33-2604	EC33-2F3A	EC34-2602
EC34-2605	EC34-2F3B	EC35-2603	EC35-2606	EC35-2F3C	EC51-2F14
EC51-2F15	EC51-2FDD	EC51-2FDE	EC51-2FDF	EC51-3301	EC51-3302
EC51-3303	EC54-290A	EC55-2F20	EC58-2F12		

4900

Cause

The printer hard disk is full.

What to Do

Press the **Stop** button to stop printing, and then take the following action.

- Cancel the **Print job** in the job queue.

  ➡ Managing Job Queue (Deleting or Preempting Other Jobs)

- Delete unneeded jobs stored in personal boxes.

  ➡ Deleting Saved Jobs

4901

Cause

The printer hard disk has not been formatted.

What to Do

Tap **OK** on the touch screen to begin formatting the hard disk.

When formatting is complete, the data on the hard disc will be erased and the printer will automatically restart.

4903

Cause

The maximum number of jobs have been saved in the box.

What to Do

Take the actions below.

- Cancel the **Print job** in the job queue.

  Managing Job Queue (Deleting or Preempting Other Jobs)

- Delete unneeded jobs stored in personal boxes.

  Deleting Saved Jobs

Note

- To stop printing, press the **Stop** button.

4905

Cause

A printer error has occurred.

What to Do

Turn the power off, wait a moment, and then turn the power back on.

If the error appears again, make a note of the detailed error code (ECxx-xxxx) that appears on the touch screen, and then turn off the power and contact a Canon customer service center.

Detailed code

EC51-3304 EC51-3306 EC51-3307 EC51-3308 EC51-3309 EC51-330A

4910

Cause

The width of the roll paper set in **Fit Roll Paper Width** in the printer driver is not the same as the width of the roll paper loaded in the printer.

What to Do

Tap **OK** on the touch screen to go to the next screen.

Check the media type and size that appear and tap **OK**.

- Printing without changes
  Tap **Print with the loaded paper.** on the touch screen.

  However, note that this error may cause paper jams and affect the printing quality.
- Stopping printing
  Tap **Cancel** on the touch screen to stop printing.
- Replacing the roll paper
  Follow the steps below to replace the paper with roll paper of the width set in the printer driver.

  1. Tap **Replace the paper and print** on the touch screen, then remove the roll paper.

     ➡ Removing the Upper Roll from the Printer

     ➡ Removing the Lower Roll from the Roll Unit (Option)

     ➡ Removing Rolls From the Roll Holder
  2. Replace the paper with paper of the width set in the printer driver.

     ➡ Loading Rolls on the Roll Holder

     ➡ Loading the Upper Roll on the Printer

     ➡ Loading the Lower Roll on the Roll Unit (Option)

     Printing begins.

Note

- To change print settings in Windows, select **Fit Roll Paper Width** in the printer driver and set the roll paper width in the dialog box that appears.
- To change print settings in Mac OS, open the printer driver and select **Fit Roll Paper Width**, and then set the roll paper width in that panel to the width of the paper loaded in the printer.

4911

Cause

The media type specified in the printer driver is not the same as the media type loaded in the printer.

What to Do

- Changing the printer driver print settings
  Follow the steps below to match the media type in the printer driver and the media type specified for the printer.
  1. Tap **Cancel** on the touch screen to stop printing.
  2. Change the media type in the printer driver settings to the media type loaded in the printer, and then try again.
- Replacing paper
  Follow the steps below to match the media type in the printer driver and the media type specified for the printer.
  1. Tap **Cancel** on the touch screen to stop printing.
  2. Load the printer with the media type set in the printer driver, and then try again.

     ➡ Loading and Printing on Rolls

     ➡ Loading and Printing on Sheets
- Printing without changes
  To continue printing, tap **Print with the loaded paper.** on the touch screen.

  However, note that this error may cause paper jams and affect the printing quality.

4913

Cause

Cannot print borderless for one of the following reasons.

- The paper size in the printer cannot be printed borderless.
- The paper is loaded askew.

What to Do

- Replacing paper

  Follow the steps below to replace the printer paper with paper that can be printed borderless.

  1. Tap **Replace the paper and print** on the touch screen, then remove the roll paper.

     ➡ Removing the Upper Roll from the Printer

     ➡ Removing the Lower Roll from the Roll Unit (Option)

     ➡ Removing Rolls From the Roll Holder

  2. Replace the printer paper with paper that can be printed borderless.

     ➡ Loading Rolls on the Roll Holder

     ➡ Loading the Upper Roll on the Printer

     ➡ Loading the Lower Roll on the Roll Unit (Option)

     Printing begins.

  Note

  - See the media information list for media types compatible with borderless printing.

    ➡ Paper Information List

- Reloading paper

  Tap **Replace the paper and print** on the touch screen, and then load the paper so that the edges are inside the borderless printing ink grooves.

  Insert the roll paper firmly until it is against the roll holder flange.

  ➡ Loading Rolls on the Roll Holder

- Printing with a border

  Tap **Print with border** on the touch screen.

  Printing with a border is now enabled.

- Stopping printing

  Tap **Cancel** on the touch screen to stop printing.

4920

Cause

Cannot cut paper for one of the following reasons.

- Paper that has been cut remains on the output guide.
- There is a foreign object near the output slot that is obstructing the cutter blade.
- The paper is not being used under the recommended usage conditions.
- The paper in use cannot be used with **Automatic Cutting**.

What to Do

- Paper that has been cut remains on the output guide
  Follow the steps below to resume printing.
  1. Lift up the release lever and remove the paper.
  2. Load the paper.
  3. Lower the release lever.
  4. If "**There is a job whose printing is not complete. Do you want to print this job?**" appears on the touch screen, tap **Yes**.

     Printing will resume, starting from the page on which the error occurred.

     ➡ Loading the Upper Roll on the Printer
- A foreign object near the output slot is obstructing the cutter blade
  Follow the steps below to resume printing.
  1. Open the top cover and remove any foreign objects.
  2. If "**There is a job whose printing is not complete. Do you want to print this job?**" appears on the touch screen, tap **Yes**.

     Printing will resume, starting from the page on which the error occurred.
- Paper not being used under the recommended usage conditions
  Every paper type has different recommended conditions of use. Use all paper under its recommended usage conditions.

  See the media information list for recommended usage conditions.

  ➡ Paper Information List
- The paper in use cannot be used with **Automatic Cutting**
  Set the roll paper cutting method to **User cut** and cut the roll paper with a cutting implement such as scissors.

  ➡ Specifying the Cutting Method for Rolls

  See the media information list for paper types that can be used with **Automatic Cutting**.

  ➡ Paper Information List

If this does not apply, there may be a cutter blade malfunction.

Contact your Canon dealer for assistance.

4922

Cause

The Media Take-up Unit cannot roll the paper for one of the following reasons.

- A paper jam has occurred and the roll cannot be rewound.
- The Media Take-up Unit malfunctioned.

What to Do

- The take-up unit's permitted capacity is exceeded
  Remove paper from the take-up unit.

  Tap **OK** on the touch screen to dismiss the error.

  Note

  - You can wind the paper until the outer diameter of the wound paper is the same as the outer diameter of the paper core.

- Paper is jammed or could not be rolled
  Remove the paper from the Media Take-up Unit.

  Tap **OK** on the touch screen to dismiss the error.

  Note

  - When printing on light-weight paper or with borderless printing, if the paper's border becomes ruffled, it may come in contact with the roll holder, resulting in poor winding. If this problem occurs when winding using a 2-inch paper core, remove the spacer that is held onto the roll holder flange with 4 hex screws.

    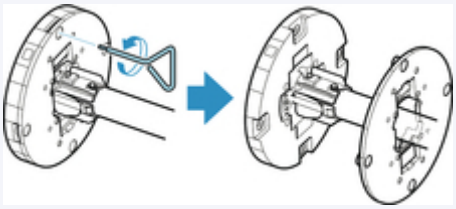

- Media Take-up Unit malfunction
  Contact your Canon dealer for assistance.

Important

- Printing will pause if there is a Media Take-up Unit error. If you do not want to printing to stop, set **Skip errors during take-up** to **ON**. However, note that this error may cause paper jams and affect the printing quality.

4924

Cause

Paper loaded is not suitable for **Color Calibration**.

What to Do

Follow the steps below to repeat **Color Calibration**.

1. Tap **OK** on the touch screen to dismiss the error.
2. Load paper suitable for **Color Calibration**.

   See the media information list for suitable paper.

   ➡ Paper Information List

Make sure the paper in the printer is the same as that in the printer media type settings. The printer will not calibrate properly if the loaded paper and media type settings are not the same.

4925

Cause

The performance of some internal printer sensors may be affected.

What to Do

Tap **OK** on the touch screen to stop **Color Calibration**.

Contact your Canon dealer for assistance.

4926

Cause

The supplied paper size is not suitable for **Color Calibration**.

What to Do

Tap **OK** on the touch screen to stop **Color Calibration**.

Load a paper size suitable for **Color Calibration**, and then repeat **Color Calibration**.

➡ Managing Colors

➡ Performing Color Calibration

4927

Cause

Color calibration may have failed for the following reasons.

- The paper for printing a test pattern is soiled. Otherwise, you have loaded colored paper.
- The printer may be exposed to strong light, such as direct sunlight, which can cause the sensors to malfunction.
- The test pattern was printed too faintly.

What to Do

Tap **OK** on the touch screen to dismiss the error, and then take the following actions.

- Load unused paper suitable for **Color Calibration**.
- Make adjustments to ensure that the printer is not exposed to strong light.
- Print a nozzle check pattern to check the print head status.

  If the pattern has gaps or horizontal white lines, the print head nozzle is blocked. Clean the print head.

  ➡ Checking for Nozzle Clogging

4931

Cause

Paper feed adjustment may have failed for the following reasons.

- The paper for printing a test pattern is soiled. Otherwise, you have loaded colored paper.
- The printer may be exposed to strong light, such as direct sunlight, which can cause the sensors to malfunction.
- The test pattern was printed too faintly.

What to Do

Tap **OK** on the touch screen to dismiss the error, and then take the following actions.

- Load unused paper.
- Make adjustments to ensure that the printer is not exposed to strong light.
- Print a nozzle check pattern to check the print head status.

  If the pattern has gaps or horizontal white lines, the print head nozzle is blocked. Clean the print head.

  ➡ Checking for Nozzle Clogging

4932

Cause

The print head cannot be calibrated because the printer is loaded with very transparent film-type paper.

What to Do

Tap **OK** on the touch screen to dismiss the error.

We recommend calibrating the print head with a frequently used, non-film paper.

➡ Automatic Adjustment to Straighten Lines and Colors

4933

Cause

The print head nozzle may be blocked.

What to Do

Follow the steps below to repeat **Print head alignment**.

1. Tap **OK** on the touch screen to dismiss the error.
2. Print a test pattern to check the nozzles.

   ➡ Checking for Nozzle Clogging

3. If the nozzle is blocked, clean the print head.

   ➡ Cleaning the Print Head

4. Repeat **Print head alignment**.

   ➡ Automatic Adjustment to Straighten Lines and Colors

4934

Cause

The print head nozzle may be blocked.

What to Do

Follow the steps below to repeat **Print head alignment**.

1. Tap **OK** on the touch screen to dismiss the error.
2. Print a test pattern to check the nozzles.

   ➡ Checking for Nozzle Clogging

3. If the nozzle is blocked, clean the print head.

   ➡ Cleaning the Print Head

4. Repeat **Print head alignment**.

   ➡ Automatic Adjustment to Straighten Lines and Colors

4935

Cause

The print head nozzle may be blocked.

What to Do

Follow the steps below to repeat **Print head alignment**.

1. Tap **OK** on the touch screen to dismiss the error.
2. Print a test pattern to check the nozzles.

   ➡ Checking for Nozzle Clogging
3. If the nozzle is blocked, clean the print head.

   ➡ Cleaning the Print Head
4. Repeat **Print head alignment**.

   ➡ Automatic Adjustment to Straighten Lines and Colors

4950

Cause

WPS (Push button method) connection failed.

What to Do

Follow the instructions on the touch screen to try connecting to the wireless LAN router again.

4951

Cause

AOSS (BUFFALO) connection failed.

What to Do

Follow the instructions on the touch screen to try connecting to the wireless LAN router again.

4952

Cause

Failed to connect to the wireless LAN router.

What to Do

Follow the instructions on the touch screen to try connecting to the wireless LAN router again.

4953

Cause

Failed to acquire IP address.

What to Do

Check the information that appears on the touch screen, and then try connecting again.

4954

Cause

Failed to set up wireless LAN using Cableless setup.

What to Do

Tap **OK** on the touch screen to dismiss the error, and then configure the settings again.

4955

Cause

IPv4/IPv6 settings were changed, but Wired LAN and Wireless LAN are set to **Disable**.

What to Do

On the touch screen, tap **OK** to dismiss the error, and then set Wired LAN and Wireless LAN to **Enable**.

4956

Cause

Attempted to change LAN settings, but they cannot be changed for the following reasons.

- Printer is operating
- Printer currently being configured using RemoteUI

What to Do

Tap **OK** on the touch screen to dismiss the error, exit other processes and then configure the settings again.

4957

Cause

Raku Raku WLAN Start (NEC) connection failed.

What to Do

Tap **OK** on the touch screen to dismiss the error and try connecting again.

4959

Cause

Direct connection failed.

It is also possible that a **Direct connection** request was made but a connection could not be established.

What to Do

Tap **OK** on the touch screen to dismiss the error and try connecting again.

5106

Cause

A printer error has occurred.

What to Do

Make a note of the detailed error code (ECxx-xxxx) that appears on the touch screen, and then turn off the power and unplug the power cord.

Contact your Canon dealer for assistance.

Detailed error codes

EC03-4061

5200

Cause

A printer error has occurred.

What to Do

Turn off the power and unplug the power cord.

Wait at least 10 seconds, and then turn the power back on.

If the error appears again, make a note of the detailed error code (ECxx-xxxx) that appears on the touch screen, and then contact a Canon customer service center.

Detailed error codes

EC21-2F76 EC21-2F77 EC21-2F78

5A60

Cause

A printer error has occurred.

What to Do

Make a note of the detailed error code (ECxx-xxxx) that appears on the touch screen, and then turn off the power and unplug the power cord.

Contact your Canon dealer for assistance.

Detailed error codes

EC33-4020 EC33-4021 EC33-4022 EC33-4023 EC33-4024 EC33-4025

EC33-4026 EC33-4028 EC33-4029 EC33-402A EC33-402B EC33-402D

5A61

Cause

A printer error has occurred.

What to Do

Make a note of the detailed error code (ECxx-xxxx) that appears on the touch screen, and then turn off the power and unplug the power cord.

Contact your Canon dealer for assistance.

Detailed error codes

EC3F-402F

5B16

Cause

A printer error has occurred.

What to Do

Make a note of the detailed error code (ECxx-xxxx) that appears on the touch screen, and then turn off the power and unplug the power cord.

Contact your Canon dealer for assistance.

Detailed error codes

EC22-4001

5B20

Cause

A printer error has occurred.

What to Do

Make a note of the detailed error code (ECxx-xxxx) that appears on the touch screen, and then turn off the power and unplug the power cord.

Contact your Canon dealer for assistance.

Detailed error codes

EC25-4001 EC41-4001 EC43-4001 EC44-4001 EC45-4001 EC47-4001

5B21

Cause

A printer error has occurred.

What to Do

Make a note of the detailed error code (ECxx-xxxx) that appears on the touch screen, and then turn off the power and unplug the power cord.

Contact your Canon dealer for assistance.

Detailed error codes

EC48-4001

5C00

Cause

A printer error has occurred.

What to Do

Make a note of the detailed error code (ECxx-xxxx) that appears on the touch screen, and then turn off the power and unplug the power cord.

Contact your Canon dealer for assistance.

Detailed error codes

EC31-4001

6502

Cause

A printer error has occurred.

What to Do

Turn off the power and unplug the power cord.

Wait at least 10 seconds, and then turn the power back on.

If the error appears again, make a note of the detailed error code (ECxx-xxxx) that appears on the touch screen, and then contact a Canon customer service center.

Detailed error codes

EC56-2FE0

6700

Cause

A printer error has occurred.

What to Do

Make a note of the detailed error code (ECxx-xxxx) that appears on the touch screen, and then turn off the power and unplug the power cord.

Contact your Canon dealer for assistance.

Detailed error codes

EC57-404F

6702

Cause

A printer error has occurred.

What to Do

Make a note of the detailed error code (ECxx-xxxx) that appears on the touch screen, and then turn off the power and unplug the power cord.

Contact your Canon dealer for assistance.

Detailed error codes

EC57-4040

6820

Cause

A printer error has occurred.

What to Do

Make a note of the detailed error code (ECxx-xxxx) that appears on the touch screen, and then turn off the power and unplug the power cord.

Contact your Canon dealer for assistance.

Detailed error codes

EC07-4060	EC51-4041	EC51-4042	EC51-4045	EC51-4046	EC51-4047
EC51-404C	EC51-404D	EC51-404E	EC51-4070	EC51-4071	EC51-4072

6900

Cause

A printer error has occurred.

What to Do

Turn off the power and unplug the power cord.

Wait at least 10 seconds, and then turn the power back on.

If the error appears again, make a note of the detailed error code (ECxx-xxxx) that appears on the touch screen, and then contact a Canon customer service center.

Detailed error codes

EC51-3000

6901

Cause

A printer error has occurred.

What to Do

Turn off the power and unplug the power cord.

Wait at least 10 seconds, and then turn the power back on.

If the error appears again, make a note of the detailed error code (ECxx-xxxx) that appears on the touch screen, and then contact a Canon customer service center.

Detailed error codes

EC51-3001

6902

Cause

A printer error has occurred.

What to Do

Turn off the power and unplug the power cord.

Wait at least 10 seconds, and then turn the power back on.

If the error appears again, make a note of the detailed error code (ECxx-xxxx) that appears on the touch screen, and then contact a Canon customer service center.

Detailed error codes

EC51-3006

6910

Cause

A printer error has occurred.

What to Do

Turn off the power and unplug the power cord.

Wait at least 10 seconds, and then turn the power back on.

If the error appears again, make a note of the detailed error code (ECxx-xxxx) that appears on the touch screen, and then contact a Canon customer service center.

Detailed error codes

EC51-3002

6911

Cause

A printer error has occurred.

What to Do

Turn off the power and unplug the power cord.

Wait at least 10 seconds, and then turn the power back on.

If the error appears again, make a note of the detailed error code (ECxx-xxxx) that appears on the touch screen, and then contact a Canon customer service center.

Detailed error codes

EC51-3003

6920

Cause

A printer error has occurred.

What to Do

Turn off the power and unplug the power cord.

Wait at least 10 seconds, and then turn the power back on.

If the error appears again, make a note of the detailed error code (ECxx-xxxx) that appears on the touch screen, and then contact a Canon customer service center.

Detailed error codes

EC51-3004

6921

Cause

A printer error has occurred.

What to Do

Turn off the power and unplug the power cord.

Wait at least 10 seconds, and then turn the power back on.

If the error appears again, make a note of the detailed error code (ECxx-xxxx) that appears on the touch screen, and then contact a Canon customer service center.

Detailed error codes

EC51-3005

6930

Cause

A printer error has occurred.

What to Do

Turn off the power and unplug the power cord.

Wait at least 10 seconds, and then turn the power back on.

If the error appears again, make a note of the detailed error code (ECxx-xxxx) that appears on the touch screen, and then contact a Canon customer service center.

Detailed error codes

EC51-3100

6931

Cause

A printer error has occurred.

What to Do

Turn off the power and unplug the power cord.

Wait at least 10 seconds, and then turn the power back on.

If the error appears again, make a note of the detailed error code (ECxx-xxxx) that appears on the touch screen, and then contact a Canon customer service center.

Detailed error codes

EC51-3101

6932

Cause

A printer error has occurred.

What to Do

Turn off the power and unplug the power cord.

Wait at least 10 seconds, and then turn the power back on.

If the error appears again, make a note of the detailed error code (ECxx-xxxx) that appears on the touch screen, and then contact a Canon customer service center.

Detailed error codes

EC51-3102

6933

Cause

A printer error has occurred.

What to Do

Turn off the power and unplug the power cord.

Wait at least 10 seconds, and then turn the power back on.

If the error appears again, make a note of the detailed error code (ECxx-xxxx) that appears on the touch screen, and then contact a Canon customer service center.

Detailed error codes

EC51-3103

6940

Cause

A printer error has occurred.

What to Do

Turn off the power and unplug the power cord.

Wait at least 10 seconds, and then turn the power back on.

If the error appears again, make a note of the detailed error code (ECxx-xxxx) that appears on the touch screen, and then contact a Canon customer service center.

Detailed error codes

EC51-3104

6941

Cause

A printer error has occurred.

What to Do

Turn off the power and unplug the power cord.

Wait at least 10 seconds, and then turn the power back on.

If the error appears again, make a note of the detailed error code (ECxx-xxxx) that appears on the touch screen, and then contact a Canon customer service center.

Detailed error codes

EC51-3105

6942

Cause

A printer error has occurred.

What to Do

Turn off the power and unplug the power cord.

Wait at least 10 seconds, and then turn the power back on.

If the error appears again, make a note of the detailed error code (ECxx-xxxx) that appears on the touch screen, and then contact a Canon customer service center.

Detailed error codes

EC51-3106

6943

Cause

A printer error has occurred.

What to Do

Turn off the power and unplug the power cord.

Wait at least 10 seconds, and then turn the power back on.

If the error appears again, make a note of the detailed error code (ECxx-xxxx) that appears on the touch screen, and then contact a Canon customer service center.

Detailed error codes

EC51-3107

6944

Cause

A printer error has occurred.

What to Do

Turn off the power and unplug the power cord.

Wait at least 10 seconds, and then turn the power back on.

If the error appears again, make a note of the detailed error code (ECxx-xxxx) that appears on the touch screen, and then contact a Canon customer service center.

Detailed error codes

EC51-3108

6945

Cause

A printer error has occurred.

What to Do

Turn off the power and unplug the power cord.

Wait at least 10 seconds, and then turn the power back on.

If the error appears again, make a note of the detailed error code (ECxx-xxxx) that appears on the touch screen, and then contact a Canon customer service center.

Detailed error codes

EC51-3109

6946

Cause

A printer error has occurred.

What to Do

Turn off the power and unplug the power cord.

Wait at least 10 seconds, and then turn the power back on.

If the error appears again, make a note of the detailed error code (ECxx-xxxx) that appears on the touch screen, and then contact a Canon customer service center.

Detailed error codes

EC51-3110

7001

Cause

A printer error has occurred.

What to Do

Make a note of the detailed error code (ECxx-xxxx) that appears on the touch screen, and then turn off the power and unplug the power cord.

Contact your Canon dealer for assistance.

Detailed error codes

EC54-401A

7003

Cause

A printer error has occurred.

What to Do

Make a note of the detailed error code (ECxx-xxxx) that appears on the touch screen, and then turn off the power and unplug the power cord.

Contact your Canon dealer for assistance.

Detailed error codes

EC54-405A

7004

Cause

A printer error has occurred.

What to Do

Make a note of the detailed error code (ECxx-xxxx) that appears on the touch screen, and then turn off the power and unplug the power cord.

Contact your Canon dealer for assistance.

Detailed error codes

EC54-405B

7050

Cause

A printer error has occurred.

What to Do

Make a note of the detailed error code (ECxx-xxxx) that appears on the touch screen, and then turn off the power and unplug the power cord.

Contact your Canon dealer for assistance.

Detailed error codes

EC51-5001

7051

Cause

A printer error has occurred.

What to Do

Make a note of the detailed error code (ECxx-xxxx) that appears on the touch screen, and then turn off the power and unplug the power cord.

Contact your Canon dealer for assistance.

Detailed error codes

EC51-5002

7052

Cause

A printer error has occurred.

What to Do

Make a note of the detailed error code (ECxx-xxxx) that appears on the touch screen, and then turn off the power and unplug the power cord.

Contact your Canon dealer for assistance.

Detailed error codes

EC51-5003

8200

Cause

A printer error has occurred.

What to Do

Make a note of the detailed error code (ECxx-xxxx) that appears on the touch screen, and then turn off the power and unplug the power cord.

Contact your Canon dealer for assistance.

Detailed error codes

EC24-4049 EC24-404A EC24-404B

9000

Cause

A printer error has occurred.

What to Do

Make a note of the detailed error code (ECxx-xxxx) that appears on the touch screen, and then turn off the power and unplug the power cord.

Contact your Canon dealer for assistance.

Detailed error codes

EC51-2F07

9110

Cause

A printer error has occurred.

What to Do

Make a note of the detailed error code (ECxx-xxxx) that appears on the touch screen, and then turn off the power and unplug the power cord.

Contact your Canon dealer for assistance.

Detailed error codes

EC52-4038 EC52-4039

B20A

Cause

A printer error has occurred.

What to Do

Make a note of the detailed error code (ECxx-xxxx) that appears on the touch screen, and then turn off the power and unplug the power cord.

Contact your Canon dealer for assistance.

Detailed error codes

EC03-403A EC03-403B

B510

Cause

A printer error has occurred.

What to Do

Make a note of the detailed error code (ECxx-xxxx) that appears on the touch screen, and then turn off the power and unplug the power cord.

Contact your Canon dealer for assistance.

Detailed error codes

EC32-4001