Canon

imageRUNNER 2422/2420

Reference Guide



Please read this guide before operating this product.
After you finish reading this guide, store it in a safe place for future reference.

ENG

imageRUNNER 2422/2420
Reference Guide

Manuals for the Machine

The manuals for this machine are divided as follows. Please refer to them for detailed information. Depending on the system configuration and product purchased, some manuals may not be needed.

 Guides with this symbol are printed manuals.

 Guides with this symbol are PDF manuals included on the accompanying CD-ROM. (See footnote.)

• **Quick Reference for Basic Operations**	**Easy Operation Guide**	CD-ROM
• **Setup Instructions** • **Basic Operations**	**User's Guide**	Book
• **Basic Operations** • **Troubleshooting**	**Reference Guide (This Document)**	CD-ROM
• **Copying Instructions**	**Copying Guide**	CD-ROM
• **Remote User Interface Instructions**	**Remote UI Guide***	CD-ROM
• **Network Connectivity and Setup Instructions**	**Network Guide***	CD-ROM
• **Color Network ScanGear Instructions (for Windows only)**	**Network ScanGear Guide***	CD-ROM
• **UFRII LT Printer Instructions**	**UFR II Printer Guide**	CD-ROM
• **UFRII LT Printer Driver Instructions for Windows**	**Windows Printer Driver Guide**	CD-ROM
• **UFRII LT Printer Driver Instructions for Macintosh**	**Mac Printer Driver Guide**	CD-ROM

* The manual is needed only if the optional Network Kit is attached to the machine.

To view the manual in PDF format, Adobe Reader/Adobe Acrobat Reader is required. If Adobe Reader/Adobe Acrobat Reader is not installed on your system, please download it from the Adobe Systems Incorporated website.

User Manual CD-ROM

The User Manual CD-ROM is software that enables you to select and view PDF Manuals included on the CD-ROM via your computer screen. Follow the instructions below to use the User Manual CD-ROM.

NOTE

Depending on the system configuration and product purchased, some manuals may not be needed.

System Requirements

The User Manual CD-ROM can be used in the following system environments.

	Windows	Macintosh
OS	Windows 2000 (Service Pack 4 or later) Windows XP (Service Pack 1a or later) Windows Vista (Service Pack 2 or later) Windows 7 Windows Server 2003 Windows Server 2008	Mac OS X 10.4.x or later
Memory	The memory required to run the above operating systems	
Computer	A computer that can run the above operating systems	
Display	A resolution of 1024 pixels × 768 pixels or higher	

IMPORTANT

Depending on the configuration of your computer, some functions may not operate correctly. If the PDF manual does not open from the CD-ROM Menu, open the PDF file directly from the [ENGLISH] folder on the User Manual CD-ROM.

Using the CD-ROM Menu

This section describes how to use the CD-ROM Menu. When you insert the User Manual CD-ROM provided into the CD-ROM drive, the Language Selection window appears. Selecting a language on this window displays the following menu. (The sample screen shot shown here is for Windows users.)

NOTE

For Macintosh users, double-click the [START] icon to start the CD-ROM Menu. The Language Selection window is displayed.

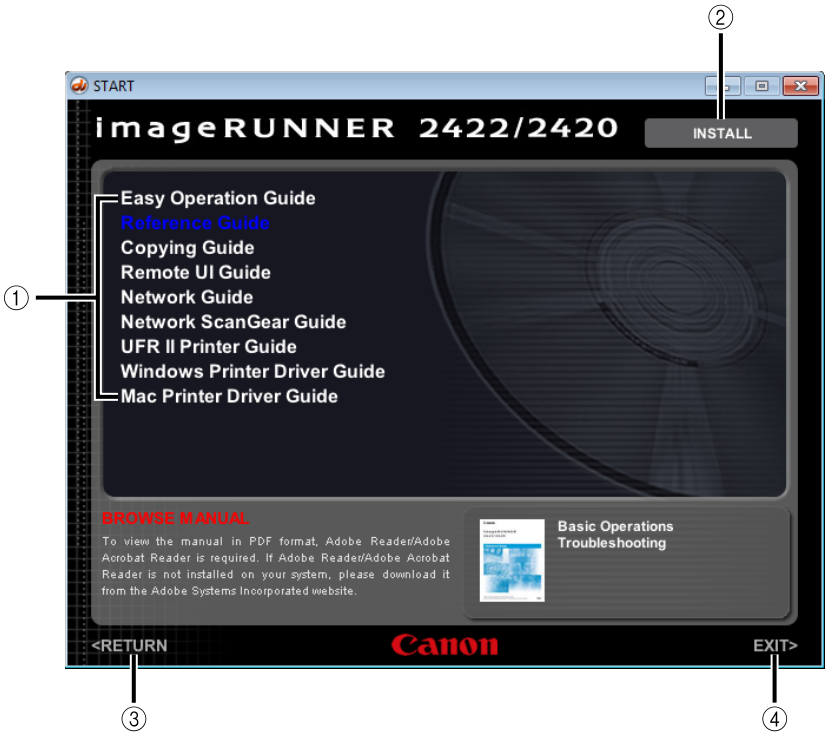

① **BROWSE MANUAL**

You can read any of the listed guides by clicking on the desired guide. After clicking on the desired guide, Adobe Reader/Adobe Acrobat Reader starts, and the PDF manual is displayed.

② **INSTALL**

You can install the listed PDF manuals on your computer. After clicking [INSTALL], select the location where you want to save the files.

③ **RETURN**

Click to return to the Language Selection menu.

④ **EXIT**

Click to exit the CD-ROM menu.

The screen shot shown above may differ from the actual display, depending on the operating system used.

How This Manual Is Organized

Chapter 1 Before You Start Using This Machine

Chapter 2 Basic Operations

Chapter 3 Useful Functions and Settings

Chapter 4 System Manager Settings

Chapter 5 Optional Equipment

Chapter 6 Routine Maintenance

Chapter 7 Troubleshooting

Chapter 8 Appendix

Includes the report sample, specifications of the main unit and optional equipment, Relationship between Original Orientation and Preprinted Paper Output Chart, and Index.

Considerable effort has been made to ensure that this manual is free of inaccuracies and omissions. However, as we are constantly improving our products, if you need an exact specification, please contact Canon.

Contents

User Manual CD-ROM iii
System Requirements iii
Using the CD-ROM Menu iv
Preface xii
How to Use This Manual xii
Symbols Used in This Manual xii
Keys and Buttons Used in This Manual xiii
Illustrations Used in This Manual xiii
Abbreviations Used in This Manual xiv
Trademarks xiv
Available Features xv
Operations and Terms Used in the Manuals xvi
Legal Notices xviii
Product Name xviii
EMC requirements of EC Directive xviii
Laser Safety xviii
Additional Information xix
International ENERGY STAR Program xx
IPv6 Ready Logo xx
WEEE Directive xxi
Copyright xxi
Third Party Software. xxii
Disclaimers. xxiii
Legal Limitations on the Usage of Your Product and the Use of Images xxiv
Important Safety Instructions xxv
Installation xxv
Power Supply xxvi
Handling xxvii
Maintenance and Inspections xxx
Consumables xxxii
Other Warnings xxxii

Chapter 1 Before You Start Using This Machine

Installation Location and Handling 1-2
Installation Precautions 1-2
Avoid Installing the Machine in the Following Locations 1-2
Select a Safe Power Supply 1-4
Provide Adequate Installation Space 1-5
Moving the Machine 1-6
Handling Precautions 1-7
Parts and Their Functions 1-9
External View 1-9
Internal View 1-11
Control Panel 1-12
Main Power and Control Panel Power 1-14
How to Turn ON the Main Power 1-14
Control Panel Power Switch 1-16
Using the Menus and Control Panel Keys 1-17
Standby Display 1-17
Using the Menus 1-18
System Settings 1-19

Chapter 2 Basic Operations

What This Machine Can Do 2-2
Entering Characters 2-6
Entering Alphanumeric Characters 2-6
Entering the Department ID and Password 2-10
Entering a User ID and Password 2-12
Placing Originals 2-14
Orientation 2-14
Platen Glass 2-16
Feeder (DADF-P2) (Optional) 2-18
Basic Copying 2-20
Feeding Paper Using the Stack Bypass 2-25
Basic Printing 2-33
Basic Remote Scanning 2-34
Checking Job Status and Log 2-37
Canceling a Job 2-39
Using the Stop Key 2-39
Using the System Monitor Screen 2-40

Chapter 3 Useful Functions and Settings

What Are Additional Functions? 3-2

Tone Settings 3-3

Specifying Common Settings 3-5

Initial Function at Power ON 3-5

Adjusting the LCD Display Contrast 3-6

Inverting the LCD Display Colors 3-7

Default Display after Auto Clear 3-8

Setting the Toner Save Mode 3-9

Adjusting the Print Density 3-10

Auto Paper Selection/Auto Drawer Switching 3-11

Identifying the Type of Paper in a Paper Source 3-13

Output Tray Designation 3-15

Standard Paper for the Stack Bypass 3-17

Setting the Speed or Print Side Priority 3-20

Changing the Language on the LCD Display 3-22

Displaying a Feeder Error Message Prompt 3-23

Data Compression Ratio for Remote Scans 3-24

Setting the Gamma Value for Remote Scans 3-26

Switching between Inch and Millimeter 3-27

Selecting the Paper Size Group 3-28

Returning the Common Settings to Their Defaults 3-29

Timer Settings 3-30

Auto Sleep Time 3-30

Auto Clear Time 3-31

Auto Shutdown Time 3-33

Adjusting the Machine 3-35

Setting the Fixing Mode for Bond Paper 3-35

Improving Print Quality and Density 3-36

Preventing Paper Curl or Jams Caused by a High-humidity Environment . . . 3-37

Preventing Paper Jams when Printing on the Back Side of Printed Paper . . . 3-38

Preventing Paper Curl Due to Paper Type 3-40

Reducing Wait Time for the Next Job 3-41

Adjusting Output Speed in the Rotate + Collate Mode 3-42

Feeder Smudge Adjustment 3-43

Printing the User's Data List 3-44

Chapter 4 System Manager Settings

Specifying the System Manager Settings 4-2
Setting System Manager ID and System Password 4-2
Setting the System Manager's Name 4-4
Device Information Settings 4-6
Department ID Management 4-8
Setting Department ID Management 4-9
Registering the Department ID, Password, and Page Limit 4-10
Changing or Erasing the Department ID, Password and Page Limit 4-17
Checking Counter Information 4-20
Printing Counter Information 4-23
Clearing Page Totals 4-25
Accepting Print Jobs with Unknown IDs 4-26
Accepting Scan Jobs with Unknown IDs 4-28
User ID Management 4-30
Remote UI 4-32
Displaying the Job Log 4-34
Accepting Jobs through the USB Interface Port 4-36

Chapter 5 Optional Equipment

System Configuration 5-2
Optional Equipment 5-2
Available Combination of Options 5-4
Feeder (DADF-P2) 5-5
Finisher-U2 5-6
Finishing Modes 5-7
Inner 2 Way Tray-E2 5-10
Cassette Feeding Module-J1/K1 5-11
Optional Accessory 5-11

Chapter 6 Routine Maintenance

Paper Drawers 6-2
Loading Paper 6-2
Adjusting a Paper Drawer to Hold a Different Paper Size 6-6
Replacing the Toner. 6-10
Drum Unit 6-16
Replacing the Drum Unit 6-16
Affixing the Counter Label for Service Technician 6-20
Replacing the Staple Cartridge 6-21
Routine Cleaning 6-24
Platen Glass and Cover 6-25
Manual Feeder Cleaning 6-26
Automatic Feeder Cleaning 6-29
Transcription Roller Cleaning 6-30
Drum Cleaning 6-31
Fixing Unit Cleaning 6-31
Offset Roller Cleaning 6-36
Consumables 6-37
Paper Stock 6-37
Toner 6-38
Be careful of counterfeit toners 6-38
Genuine Supplies 6-39

Chapter 7 Troubleshooting

When Paper Jams Occur Frequently 7-2
Clearing Paper Jams 7-3
Clearing Paper Jams with On-Screen Instructions. 7-3
Fixing Unit 7-5
Paper Drawer 1 7-8
Paper Drawers 2, 3, and 4 7-12
Stack Bypass 7-16
Duplex Unit-A1 (Optional) 7-17
Feeder (DADF-P2) (Optional). 7-19
Finisher-U2 (Optional) 7-23
Inner 2 Way Tray-E2 (Optional) 7-25
Clearing Staple Jams. 7-28
Finisher-U2 (Optional) 7-28
List of Error Messages 7-31
Self-Diagnostic Display 7-31
Service Call Message 7-37
Contacting Your Local Authorized Canon Dealer 7-37

Chapter 8 Appendix

Additional Functions Settings Table 8-2
Sample Reports 8-7
Department ID List 8-7
User's Data List 8-7
Specifications 8-8
Main Unit 8-8
Feeder (DADF-P2) 8-10
Cassette Feeding Module-J1 8-11
Cassette Feeding Module-K1 8-11
Finisher-U2 8-12
Duplex Unit-A1 8-13
Inner 2 Way Tray-E2 8-13
Relationship between Original Orientation and Preprinted Paper Output Chart 8-14
Multifunctional Operations 8-16
Available Paper Stock 8-17
Index 8-19

Preface

Thank you for purchasing the Canon imageRUNNER 2422/2420. Please read this manual thoroughly before operating the machine to familiarize yourself with its capabilities, and to make the most of its many functions. After reading this manual, store it in a safe place for future reference.

How to Use This Manual

Symbols Used in This Manual

The following symbols are used in this manual to explain procedures, restrictions, handling precautions, and instructions that should be observed for safety.

WARNING	Indicates a warning concerning operations that may lead to death or injury to persons if not performed correctly. To use the machine safely, always pay attention to these warnings.
CAUTION	Indicates a caution concerning operations that may lead to injury to persons if not performed correctly. To use the machine safely, always pay attention to these cautions.
IMPORTANT	Indicates operational requirements and restrictions. Be sure to read these items carefully to operate the machine correctly, and avoid damage to the machine or property.
NOTE	Indicates a clarification of an operation, or contains additional explanations for a procedure. Reading these notes is highly recommended.
	Indicates an operation that must not be performed. Read these items carefully, and make sure not to perform the described operations.

Keys and Buttons Used in This Manual

The following symbols and key/button names are a few examples of how keys and buttons to be clicked or pressed are expressed in this manual:

- Control Panel keys

Control Panel Keys	Example
[Key icon]	[▼]
Key icon + (Key Name)	(Additional Functions)
[Key Name]	[OK]

- Buttons on Computer Operation Screens

UI Type	Example
[Button Name]	[OK]
[UI Name] + menu, icon, etc.	[Start] menu, [CD-ROM] icon, etc.

Illustrations Used in This Manual

The machine illustrations used in this manual are those of the imageRUNNER 2420 with the following optional equipment attached to it: the Feeder (DADF-P2), Finisher-U2, Additional Finisher Tray-C1, Cassette Feeding Module-J1, and Cassette Feeding Module-K1.

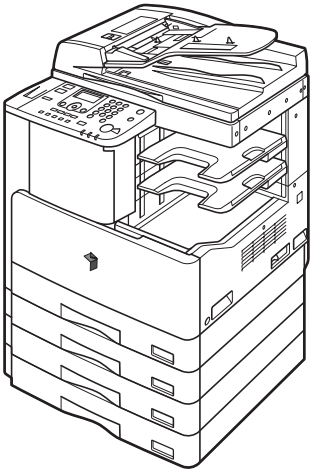

Abbreviations Used in This Manual

In this manual, product names are abbreviated as follows:

Microsoft Windows 2000 operating system:	Windows 2000
Microsoft Windows XP operating system:	Windows XP
Microsoft Windows Vista operating system:	Windows Vista
Microsoft Windows 7 operating system:	Windows 7
Microsoft Windows Server 2003 operating system:	Windows Server 2003
Microsoft Windows Server 2008 operating system:	Windows Server 2008
Microsoft Windows operating system:	Windows

Trademarks

Macintosh and Mac OS are trademarks of Apple Inc., registered in the U.S. and other countries.

Microsoft, Windows, Windows Vista, Windows Server, Excel and PowerPoint are either registered trademarks or trademarks of Microsoft Corporation in the United States and/or other countries.

Other product and company names herein may be the trademarks of their respective owners.

Available Features

The procedures described in the manuals assume the machine fully equipped with optional equipment. Depending on the system configuration and product purchased, some features described in the manuals may not be functional. The table below shows the available features on a product basis.

✓: Available

N/A: Not Available

opt.: Optional

	Copy	Print	Original Size Detection	2-Sided Printing	Feeder	Platen Cover	Network Scan	Remote UI
imageRUNNER 2422	✓	✓	N/A	opt.	opt.	✓	opt.	opt.
imageRUNNER 2420	✓	✓	N/A	opt.	opt.	✓	opt.	opt.

NOTE

For more information on the optional equipment, see Chapter 5, “Optional Equipment.”

Operations and Terms Used in the Manuals

This machine makes effective use of memory to perform print operations efficiently. For example, as soon as the machine has scanned the original that you want to copy, it can immediately scan the next person's original. You can also print from this machine, using a function other than the Copy function. In this machine, these operations take place in a complex way, so that not only copies, but also various kinds of prints may sometimes have to wait their turn before they can be printed.

To avoid confusion when reading the manuals, the terms "scanning," "printing," and "copying," used throughout the manuals are defined below. When making a copy, the process of scanning originals and printing copies may be described as separate functions.

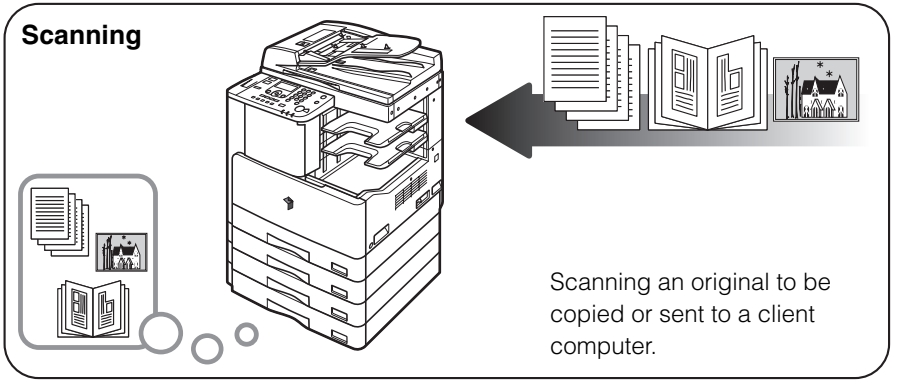

Printing



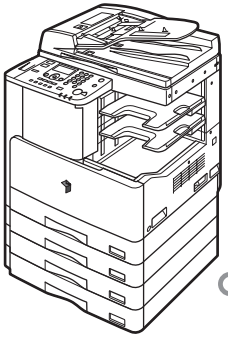

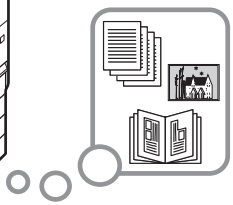

Outputting documents such as a copy or data sent from a client computer to the machine.

Copying



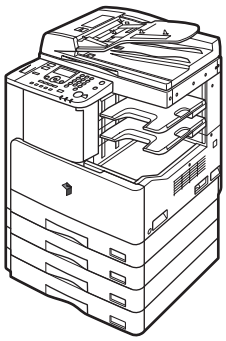



Printing data scanned from an original, followed by finishing options, such as stapling.

Legal Notices

Product Name

Safety regulations require the product's name to be registered. In some regions where this product is sold, the following name(s) in ( ) may be registered instead.

imageRUNNER 2422/2420 (F191200)

EMC requirements of EC Directive

This equipment conforms with the essential EMC requirements of EC Directive. We declare that this product conforms with the EMC requirements of EC Directive at nominal mains input 230 V, 50 Hz although the rated input of the product is 220 to 240 V, 50/60 Hz. Use of shielded cable is necessary to comply with the technical EMC requirements of EC Directive.

Laser Safety

This product is certificated as a Class 1 laser product under IEC60825-1: 2007 and EN60825-1: 2007. This means that the product does not produce hazardous laser radiation.

Since radiation emitted inside the product is completely confined within protective housings and external covers, the laser beam cannot escape from the machine during any phase of user operation. Do not remove protective housings or external covers, except as directed by the equipment's manual.

When servicing or adjusting the optical system of the product, be careful not to place screwdrivers or other shiny objects in the path of the laser beam. Also, accessories such as watches and rings should be removed before working on the product. The reflected beam, whether visible or invisible, can permanently damage your eyes.

The labels shown below are attached to the laser scanner unit inside the machine and next to the toner cartridge behind the front cover.





This product has been classified under IEC60825-1: 2007 and EN60825-1: 2007, which conform to the following classes:

CLASS 1 LASER PRODUCT
LASER KLASSE 1
APPAREIL Á LASER DE CLASSE 1
APPARECCHIO LASER DI CLASSE 1
PRODUCTO LÁSER DE CLASE 1
APARELHO A LASER DE CLASSE 1
LUOKAN 1 LASER-TUOTE
LASERPRODUKT KLASS 1

CAUTION

Use of controls, adjustments, or performance of procedures other than those specified in the manuals may result in hazardous radiation exposure.

International ENERGY STAR Program

As an ENERGY STAR® Partner, Canon Inc. has determined that this machine meets the ENERGY STAR Program guidelines for energy efficiency.

The International ENERGY STAR Office Equipment Program is an international program that promotes energy saving through the use of computers and other office equipment. The program backs the development and dissemination of products with functions that effectively reduce energy consumption. It is an open system in which business proprietors can participate voluntarily. The targeted products are office equipment, such as computers, displays, printers, facsimiles, and copiers. The standards and logos are uniform among participating nations.

IPv6 Ready Logo

The protocol stack included in this machine has obtained the IPv6 Ready Logo Phase-1 established by the IPv6 Forum.

WEEE Directive



European Union (and EEA) only.

This symbol indicates that this product is not to be disposed of with your household waste, according to the WEEE Directive (2002/96/ EC) and your national law. This product should be handed over to a designated collection point, e.g., on an authorized one-for-one basis when you buy a new similar product or to an authorized collection site for recycling waste electrical and electronic equipment (EEE). Improper handling of this type of waste could have a possible negative impact on the environment and human health due to potentially hazardous substances that are generally associated with EEE. At the same time, your cooperation in the correct disposal of this product will contribute to the effective usage of natural resources. For more information about where you can drop off your waste equipment for recycling, please contact your local city office, waste authority, approved WEEE scheme or your household waste disposal service. For more information regarding return and recycling of WEEE products, please visit www.canon-europe.com/environment.

(EEA: Norway, Iceland and Liechtenstein)

Copyright

Copyright 2012 by Canon Inc. All rights reserved.

No part of this publication may be reproduced or transmitted in any form or by any means, electronic or mechanical, including photocopying and recording, or by any information storage or retrieval system without the prior written permission of Canon Inc.

Third Party Software

Third Party Software

A. This product includes third-party software modules. Use and distribution of this software modules (the “SOFTWARE”) are subject to conditions (1) through (9) below.

(1) You agree that you will comply with any applicable export control laws, restrictions or regulations of the countries involved in the event that this product including the SOFTWARE is shipped, transferred or exported into any country.

(2) Rights holders of the SOFTWARE retain in all respects the title, ownership and intellectual property rights in and to the SOFTWARE. Except as expressly provided herein, no license or right, expressed or implied, is hereby conveyed or granted by rights holders of the SOFTWARE to you for any intellectual property of rights holders of the SOFTWARE.

(3) You may use the SOFTWARE solely for use with the Canon product you purchased (the “PRODUCT”).

(4) You may not assign, sublicense, market, distribute, or transfer the SOFTWARE to any third party without prior written consent of rights holders of the SOFTWARE.

(5) Notwithstanding the foregoing, you may transfer the SOFTWARE only when (a) you assign all of your rights to the PRODUCT and all rights and obligations under the conditions to transferee and (b) such transferee agrees to be bound by all these conditions.

(6) You may not decompile, reverse engineer, disassemble or otherwise reduce the code of the SOFTWARE to human readable form.

(7) You may not modify, adapt, translate, rent, lease or loan the SOFTWARE or create derivative works based on the SOFTWARE.

(8) You are not entitled to remove or make separate copies of the SOFTWARE from the PRODUCT.

(9) The human-readable portion (the source code) of the SOFTWARE is not licensed to you.

B. Notwithstanding above, in case the other conditions accompany third-party software modules, these software modules are subject to the other conditions.

The Software Subjected to the Other Conditions

Please refer to <The Software Subjected to the Other Conditions > section for more detail and corresponding license conditions.

The Software Subjected to the Other Conditions

This product contains software licensed under the following terms and conditions.

Copyright (C) 1998-2004 WIDE Project. All rights reserved.

Redistribution and use in source and binary forms, with or without modification, are permitted provided that the following conditions are met:

1. Redistributions of source code must retain the above copyright notice, this list of conditions and the following disclaimer.

2. Redistributions in binary form must reproduce the above copyright notice, this list of conditions and the following disclaimer in the documentation and/or other materials provided with the distribution.

3. Neither the name of the project nor the names of its contributors may be used to endorse or promote products derived from this software without specific prior written permission.

THIS SOFTWARE IS PROVIDED BY THE PROJECT AND CONTRIBUTORS ``AS IS'' AND ANY EXPRESS OR IMPLIED WARRANTIES, INCLUDING, BUT NOT LIMITED TO, THE IMPLIED WARRANTIES OF MERCHANTABILITY AND FITNESS FOR A PARTICULAR PURPOSE ARE DISCLAIMED. IN NO EVENT SHALL THE PROJECT OR CONTRIBUTORS BE LIABLE FOR ANY DIRECT, INDIRECT, INCIDENTAL, SPECIAL, EXEMPLARY, OR CONSEQUENTIAL DAMAGES (INCLUDING, BUT NOT LIMITED TO, PROCUREMENT OF SUBSTITUTE GOODS OR SERVICES; LOSS OF USE, DATA, OR PROFITS; OR BUSINESS INTERRUPTION) HOWEVER CAUSED AND ON ANY THEORY OF LIABILITY, WHETHER IN CONTRACT, STRICT LIABILITY, OR TORT (INCLUDING NEGLIGENCE OR OTHERWISE) ARISING IN ANY WAY OUT OF THE USE OF THIS SOFTWARE, EVEN IF ADVISED OF THE POSSIBILITY OF SUCH DAMAGE.

Disclaimers

The information in this document is subject to change without notice.

CANON INC. MAKES NO WARRANTY OF ANY KIND WITH REGARD TO THIS MATERIAL, EITHER EXPRESS OR IMPLIED, EXCEPT AS PROVIDED HEREIN, INCLUDING WITHOUT LIMITATION, THEREOF, WARRANTIES AS TO MARKETABILITY, MERCHANTABILITY, FITNESS FOR A PARTICULAR PURPOSE OR USE OR NON-INFRINGEMENT. CANON INC. SHALL NOT BE LIABLE FOR ANY DIRECT, INCIDENTAL, OR CONSEQUENTIAL DAMAGES OF ANY NATURE, OR LOSSES OR EXPENSES RESULTING FROM THE USE OF THIS MATERIAL.

Legal Limitations on the Usage of Your Product and the Use of Images

Using your product to scan, print or otherwise reproduce certain documents, and the use of such images as scanned, printed or otherwise reproduced by your product, may be prohibited by law and may result in criminal and/or civil liability. A non-exhaustive list of these documents is set forth below. This list is intended to be a guide only. If you are uncertain about the legality of using your product to scan, print or otherwise reproduce any particular document, and/or of the use of the images scanned, printed or otherwise reproduced, you should consult, in advance, with your legal advisor for guidance.

- Paper Money
- Money Orders
- Certificates of Deposit
- Postage Stamps (canceled or uncanceled)
- Identifying Badges or Insignias
- Selective Service or Draft Papers
- Checks or Drafts Issued by Governmental Agencies
- Motor Vehicle Licenses and Certificates of Title
- Travelers Checks
- Food Stamps
- Passports
- Immigration Papers
- Internal Revenue Stamps (canceled or uncanceled)
- Bonds or Other Certificates of Indebtedness
- Stock Certificates
- Copyrighted Works/Works of Art without Permission of Copyright Owner

Important Safety Instructions

Please read these “Important Safety Instructions” thoroughly before operating the machine. As these instructions are intended to prevent injury to the user or other persons or destruction of property, always pay attention to these instructions. Also, since it may result in unexpected accidents or injuries, do not perform any operation unless otherwise specified in the manuals. Improper operation or use of this machine could result in personal injury and/or damage requiring extensive repair that may not be covered under your Limited Warranty.

Installation

WARNING

- **Never block the ventilation slots and louvers on the machine. These openings are provided for proper ventilation of working parts inside the machine. Blocking these openings can cause the machine to overheat. Never place the machine on a soft surface, such as a sofa or rug.**
- **Do not install the machine in the following locations:**
  - **A damp or dusty location**
  - **A location near water faucets or water**
  - **A location exposed to direct sunlight**
  - **A location subject to high temperatures**
  - **A location near open flames**
- **Do not install the machine near alcohol, paint thinner, or other flammable substances. If flammable substances come into contact with electrical parts inside the machine, it may result in a fire or electrical shock.**
- **Do not place the following items on the machine. If these items come into contact with a high-voltage area inside the machine, it may result in a fire or electrical shock. If these items are dropped or spilled inside the machine, immediately turn OFF the main power switch, and disconnect the power cord from the power outlet. Then, contact your local authorized Canon dealer.**
  - **Necklaces and other metal objects**
  - **Cups, vases, flowerpots, and other containers filled with water or liquids**

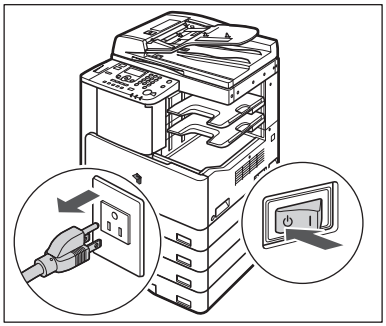

⚠ CAUTION

Do not install the machine in unstable locations, such as unsteady platforms or inclined floors, or in locations subject to excessive vibrations, as this may cause the machine to fall or tip over, resulting in personal injury.

Power Supply

⚠ WARNING

- **Do not damage or modify the power cord. Also, do not place heavy objects on the power cord, or pull on or excessively bend it, as this could cause electrical damage and result in a fire or electrical shock.**
- **Keep the power cord away from a heat source; failure to do this may cause the power cord coating to melt, resulting in a fire or electrical shock.**
- **Do not connect or disconnect the power cord with wet hands, as this may result in electrical shock.**
- **Do not connect the power cord to a multiplug power strip, as this may cause a fire or electrical shock.**
- **Do not bundle up or tie the power cord in a knot, as this may result in a fire or electrical shock.**
- **Insert the power plug completely into the power outlet, as failure to do so may result in a fire or electrical shock.**
- **Do not use power cords other than the power cord provided, as this may result in a fire or electrical shock.**
- **As a general rule, do not use extension cords. Using an extension cord may result in a fire or electrical shock. If an extension cord must be used, however, use one rated for voltages of 220 - 240 V AC and over, untie the cord binding, and insert the power plug completely into the extension cord outlet to ensure a firm connection between the power cord and the extension cord.**
- **Do not use power supplies with voltages other than those specified herein, as this may result in a fire or electrical shock.**
- **Always grasp the power plug when disconnecting the power cord. Pulling on the power cord may expose or snap the core wire, or otherwise damage the power cord. If the power cord is damaged, this could cause current to leak, resulting in a fire or electrical shock.**

IMPORTANT

Leave sufficient space around the power plug so that it can be unplugged easily. If objects are placed around the power plug, you will be unable to unplug it in an emergency.

Handling

WARNING

- **Do not attempt to disassemble or modify the machine. There are high-temperature and high-voltage components inside the machine which may result in a fire or electrical shock.**
- **If the machine makes strange noises, or gives off smoke, heat, or strange smells, immediately turn OFF the main power switch, and disconnect the power cord from the power outlet. Then, contact your local authorized Canon dealer. Continued use of the machine in this condition may result in a fire or electrical shock.**
- **Do not use highly flammable sprays near the machine. If gas from these sprays comes into contact with the electrical components inside the machine, it may result in a fire or electrical shock.**
- **To avoid damage to the power cord and creating a fire hazard, always turn OFF the main power switch, and unplug the interface cable when moving the machine. Otherwise, the power cord or interface cable may be damaged, resulting in a fire or electrical shock.**
- **Make sure that the power plug is firmly inserted into the power outlet if the machine was moved. Do not use the machine while the connection is loose, as doing so may cause a fire.**
- **Do not drop paper clips, staples, or other metal objects inside the machine. Also, do not spill water, liquids, or flammable substances (alcohol, benzene, paint thinner, etc.) inside the machine. If these items come into contact with a high-voltage area inside the machine, it may result in a fire or electrical shock. If these items are dropped or spilled inside the machine, immediately turn OFF the main power switch, and disconnect the power cord from the power outlet. Then, contact your local authorized Canon dealer.**

CAUTION

- **Do not place heavy objects on the machine, as they may tip over and fall resulting in personal injury.**
- **Close the feeder/platen cover gently to avoid catching your hands, as this may result in personal injury.**

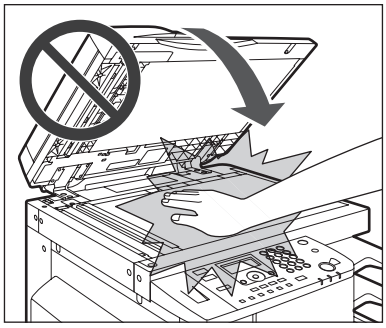

- **Do not press down hard on the feeder/platen cover when using the platen glass to make copies of thick books. Doing so may damage the platen glass and result in personal injury.**
- **Do not place your hands, hair, clothing, etc., near the exit and feed rollers. Even if the machine is not in operation, your hands, hair, or clothing may get caught in the rollers, which may result in personal injury or damage if the machine suddenly starts printing.**
- **Paper that has just been output from the machine may be hot. Be careful when removing or aligning paper from the output tray. Touching paper right after it is output may result in low-temperature burns.**
- **Do not touch the finisher while the machine is printing, as this may result in personal injury.**
- **Do not place your hand in the following parts of the finisher, as this may result in personal injury:**
  - **Trays**
  - **Stapler unit (where stapling is performed)**
  - **Rollers**
  - **Spaces between the trays and the main unit**

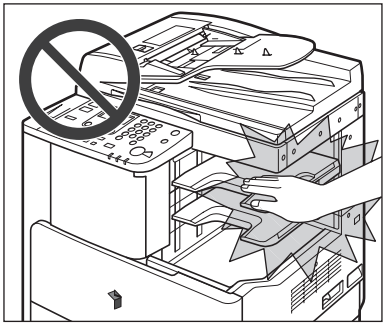

Finisher-U2

- **The laser beam can be harmful to human bodies. Since radiation emitted inside the product is completely confined within protective housings and external covers, the laser beam cannot escape from the machine during any phase of user operation. Read the following remarks and instructions for safety.**
  - **Never open covers other than those instructed in the manuals.**
  - **Do not remove the following caution labels which are attached to the machine. If the labels have been removed, contact your local authorized Canon dealer.**

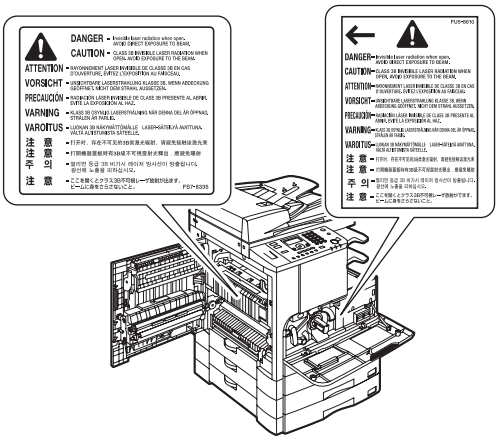

  - **If the laser beam escapes from the machine, exposure may cause serious damage to your eyes.**
  - **Controlling, adjusting, or operating the machine in ways not mentioned in the manuals for this machine may cause dangerous radiation to escape from the machine.**

IMPORTANT

Turn OFF the control panel power switch for safety when the machine will not be used for a long period of time, such as overnight. Also, turn OFF the main power switch, and disconnect the power cord for safety when the machine will not be used for an extended period of time, such as during consecutive holidays.

⚠ WARNING

- **When cleaning the machine, first turn OFF the main power switch, then disconnect the power cord. Failure to observe these steps may result in a fire or electrical shock.**
- **Disconnect the power cord from the power outlet regularly, and clean the area around the base of the power plug's metal pins and the power outlet with a dry cloth to ensure that all dust and grime is removed. If the power cord is connected for a long period of time in a damp, dusty, or smoky location, dust can build up around the power plug and become damp. This may cause a short circuit and result in a fire.**
- **Clean the machine using a slightly dampened cloth with a mild detergent mixed with water. Do not use alcohol, benzene, paint thinner, or other flammable substances. Check detergent for flammability prior to use. If flammable substances come into contact with a high-voltage area inside the machine, it may result in a fire or electrical shock.**
- **There are some areas inside the machine which are subject to high-voltages. When removing jammed paper or when inspecting the inside the machine, do not allow necklaces, bracelets, or other metal objects to touch the inside the machine, as this may result in burns or electrical shock.**
- **Do not burn or throw used toner cartridges into open flames, as this may cause the toner remaining inside the cartridges to ignite, resulting in burns or a fire.**
- **If you accidentally spill or scatter toner, carefully gather the toner particles together or wipe them up with a soft, damp cloth in a way that prevents inhalation.**
  Never use a vacuum cleaner that does not have safeguards against dust explosions to clean up spilled toner. Doing so may cause a malfunction in the vacuum cleaner, or result in a dust explosion due to static discharge.
- **Make sure that the power plug is firmly inserted into the power outlet after cleaning the machine. Do not use the machine while the connection is loose, as doing so may cause a fire.**
- **Check the power cord and power plug regularly. If the following conditions occur, contact your local authorized Canon dealer, as the condition may cause a fire:**
  - **There are burn marks on the power plug.**
  - **The blade on the power plug is deformed or broken.**
  - **The power goes OFF and ON when the power cord is bent.**
  - **There are cuts, cracks, or indentations on the power cord.**
  - **A part of the power cord becomes hot.**
- **Check the power cord and power plug regularly to make sure that they are not handled in the following manner, as this may result in a fire or electrical shock:**
  - **The connection part of the power plug is loose.**
  - **Stress is being applied to the power cord by a heavy object or by affixing it with staples.**
  - **The power plug is loose.**
  - **The power cord is tied in a bundle.**
  - **The power cord protrudes into a walkway.**
  - **The power cord is in front of a heater.**

⚠ CAUTION

- **The fixing unit, the duplex unit, and their surroundings inside the machine may become hot during use. When removing jammed paper or when inspecting the inside of the machine, do not touch the fixing unit, the duplex unit, and their surroundings, as doing so may result in burns or electrical shock.**

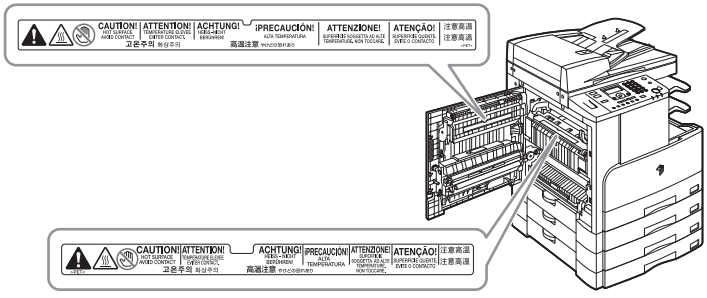

- **When removing jammed paper or when inspecting the inside of the machine, do not expose yourself to the heat emitted from the fixing unit and its surroundings for a prolonged period of time. Doing so may result in low temperature burns, even if you do not touch the fixing unit and its surroundings directly.**
- **When removing jammed paper or replacing the toner cartridge, take care not to allow the toner to come into contact with your hands or clothing, as this will dirty your hands or clothing. If they become dirty, wash immediately with cold water. Washing with warm water will set the toner, and make it impossible to remove the toner stains.**
- **When removing paper which has become jammed inside the machine, remove the jammed paper gently to prevent the toner on the paper from scattering and getting into your eyes or mouth. If the toner gets into your eyes or mouth, wash immediately with cold water and immediately consult a physician.**
- **When loading paper or removing jammed originals or paper, take care not to cut your hands on the edges of the originals or paper.**
- **When removing paper which has become jammed inside the machine, take care not to cut your hands or injure yourself on the inside of the machine. If you cannot remove the paper, contact your local authorized Canon dealer.**
- **When removing a used toner cartridge, remove the cartridge carefully to prevent the toner from scattering and getting into your eyes or mouth. If the toner gets into your eyes or mouth, wash immediately with cold water and immediately consult a physician.**
- **Do not dismantle the toner cartridge, as doing so may cause the toner to fly out and enter your eyes or mouth. If the toner gets into your eyes or mouth, wash immediately with cold water and immediately consult a physician.**
- **If toner escapes from the toner cartridge, make sure not to ingest the toner or allow it to directly touch your skin. If toner touches your skin, wash it away with soap and water. If your skin still feels irritated after washing it, or you ingest toner, consult a doctor immediately.**

Consumables

⚠ WARNING

- **Do not burn or throw used toner cartridges into open flames, as this may cause the toner remaining inside the cartridges to ignite, resulting in burns or a fire.**
- **Do not store toner cartridges or paper in places exposed to open flames, as this may cause the toner or paper to ignite, resulting in burns or a fire.**
- **If you accidentally spill or scatter toner, carefully gather the toner particles together or wipe them up with a soft, damp cloth in a way that prevents inhalation.**
  Never use a vacuum cleaner that does not have safeguards against dust explosions to clean up spilled toner. Doing so may cause a malfunction in the vacuum cleaner, or result in a dust explosion due to static discharge.

⚠ CAUTION

- **Keep toner and other consumables out of the reach of small children. If these items are ingested, consult a physician immediately.**
- **Do not dismantle the toner cartridge, as doing so may cause the toner to fly out and enter your eyes or mouth. If toner gets into your eyes or mouth, wash immediately with cold water and immediately consult a physician.**
- **If toner escapes from the toner cartridge, make sure not to ingest the toner or allow it to directly touch your skin. If toner touches your skin, wash it away with soap and cold water. If your skin still feels irritated after washing it, or you ingest toner, consult a doctor immediately.**
- **When discarding used toner cartridges, put the cartridges into a bag to prevent the toner remaining inside the cartridges from scattering, and dispose of them in a location away from open flames.**

Other Warnings

⚠ WARNING

For cardiac pacemaker users:
This product emits low level magnetic flux. If you use a cardiac pacemaker and feel abnormalities, please move away from the product and consult your doctor.

Before You Start Using This Machine

1
CHAPTER

This chapter describes what you should know before using this machine, such as parts and their functions, and how to turn ON the main power.

Installation Location and Handling 1-2
- Installation Precautions 1-2
- Handling Precautions 1-7

Parts and Their Functions. 1-9
- External View 1-9
- Internal View 1-11
- Control Panel 1-12

Main Power and Control Panel Power 1-14
- How to Turn ON the Main Power 1-14
- Control Panel Power Switch 1-16

Using the Menus and Control Panel Keys 1-17
- Standby Display 1-17
- Using the Menus 1-18

System Settings 1-19

Installation Location and Handling

This section describes precautions for installation location and handling. Read this section prior to using the machine.

Installation Precautions

Avoid Installing the Machine in the Following Locations

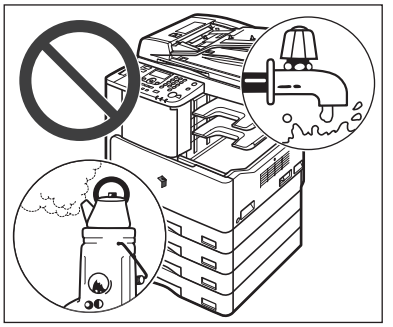

■ **Avoid locations subject to temperature and humidity extremes, whether low or high.**

For example, avoid installing the machine near water faucets, hot water heaters, humidifiers, air conditioners, heaters or stoves.

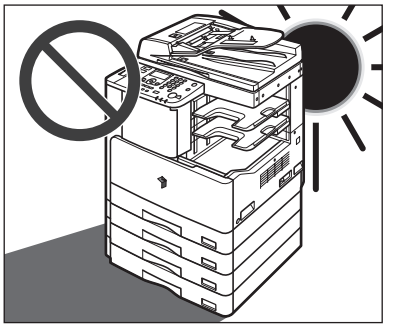

■ **Avoid installing the machine in direct sunlight.**

If this is unavoidable, use curtains to shade the machine. Be sure that curtains do not block the machine's ventilation slots or louvers, or interfere with the electrical cord or power supply.

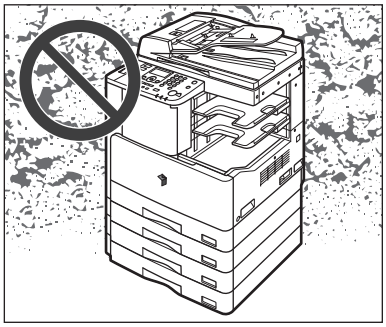

■ **Avoid poorly ventilated locations.**

This machine generates a slight amount of ozone or other odors during normal use. Although sensitivity to ozone or other odors may vary, this amount is not harmful. Ozone or other odors may be more noticeable during extended use or long production runs, especially in poorly ventilated rooms. It is recommended that the room be appropriately ventilated, sufficient to maintain a comfortable working environment, in areas of machine operation.

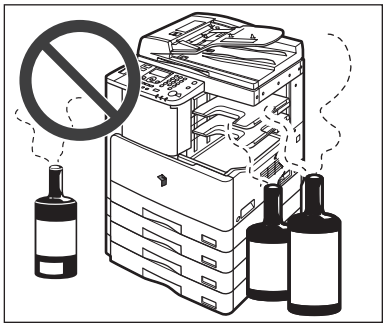

■ **Avoid locations where ammonia gas is emitted.**

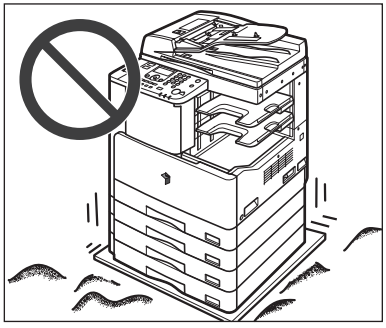

■ **Avoid locations that are subject to vibration.**

For example, avoid installing the machine on unstable floors or stands.

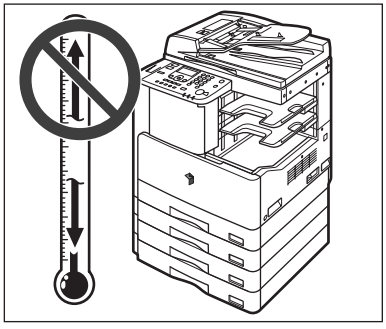

■ **Avoid exposing the machine to rapid changes in temperature.**

If the room in which the machine is installed is cold but rapidly heated, water droplets (condensation) may form inside the machine. This may result in a noticeable degradation in the quality of the printed image, the inability to properly scan an original, or the outputs having no printed image at all.

- **Avoid locations where a considerable amount of dust accumulates.**
- **Avoid locations near volatile or flammable materials, such as alcohol or paint thinner.**
- **Avoid installing the machine near computers or other precision electronic equipment.**
  Electrical interference and vibrations generated by the machine during printing can adversely affect the operation of such equipment.
- **Avoid installing the machine near televisions, radios, or similar electronic equipment.**
  The machine may interfere with sound and picture signal reception. Insert the power plug into a dedicated power outlet, and maintain as much space as possible between the machine and other electronic equipment.

Select a Safe Power Supply

- **Plug the machine into a standard 220 - 240 V AC, three-wire grounded outlet.**
- **Make sure that the power supply for the machine is safe, and has a steady voltage.**
- **Do not connect other electrical equipment to the same power outlet to which the machine is connected.**
- **Do not connect the power cord to a multiplug power strip, as this may cause a fire or electrical shock.**

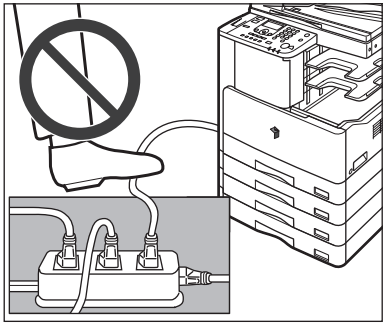

- **The power cord may become damaged if it is often stepped on or if heavy objects are placed on it. Continued use of a damaged power cord can lead to an accident, such as a fire or electrical shock.**
- **The power cord should not be taut, as this may lead to a loose connection and cause overheating, which could result in a fire.**
- **If excessive stress is applied to the connection part of the power cord, it may damage the power cord or the wires inside the machine may disconnect. This could result in a fire. Avoid the following situations:**
  - **Connecting and disconnecting the power cord frequently**
  - **Tripping over the power cord**
  - **Bending the power cord near the connection part, and applying continuous stress to the power outlet or the connection part**
  - **Applying excessive force on the power plug**

Provide Adequate Installation Space

■ **Provide enough space on each side of the machine for unrestricted operation.**

The optional Finisher-U2 and Document Tray-J1 are attached.

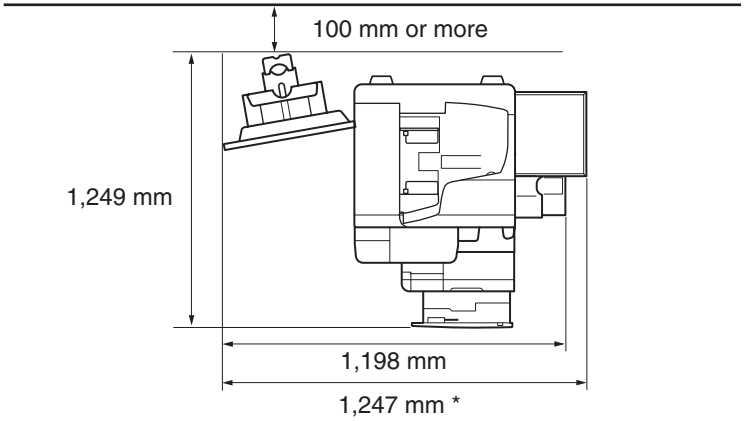

* The width is 1,018 mm when no options are attached, or 1,247 mm when the optional Document Tray-J1 is attached.

Moving the Machine

- **If you intend to move the machine, even to a location on the same floor of your building, contact your local authorized Canon dealer beforehand.**

- **The machine is heavy, and requires two or more people to lift it. Therefore, do not attempt to move it by yourself. Doing so, may result in personal injury.**

- **When carrying the machine, be sure to hold the handles, as indicated below. Failure to do so, may cause the machine to be dropped, and result in personal injury.**

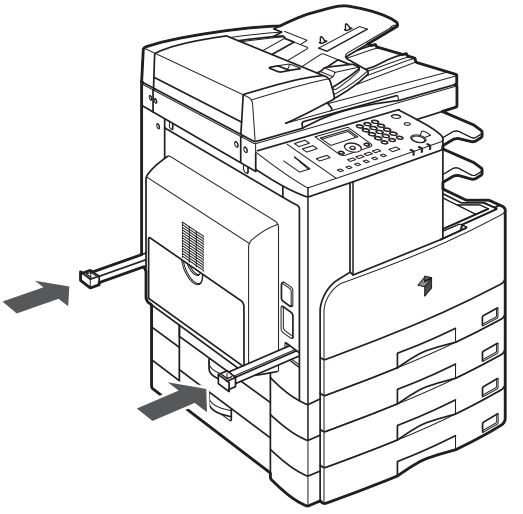

Pull out and grasp these handles.

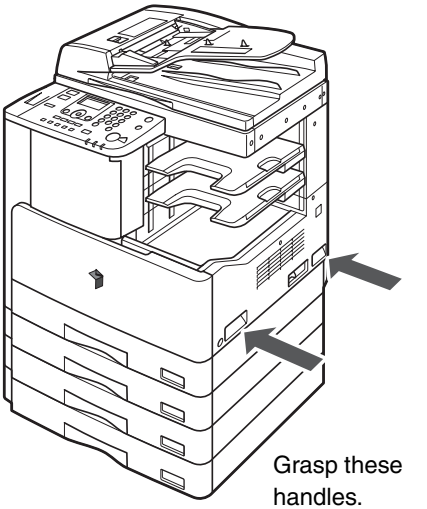

Grasp these handles.

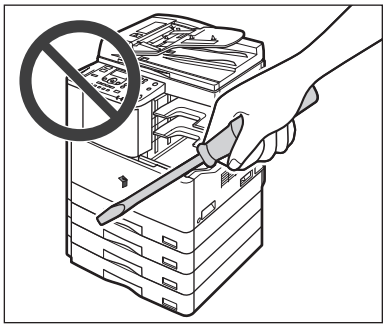

■ **Do not attempt to disassemble or modify the machine.**

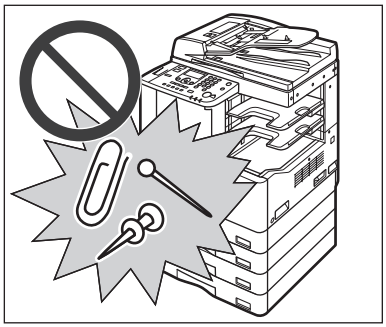

■ **Be careful not to spill liquids or drop any foreign objects, such as paper clips or staples inside the machine. If a foreign object comes into contact with electrical parts inside the machine, it may cause a short circuit and result in a fire or electrical shock.**

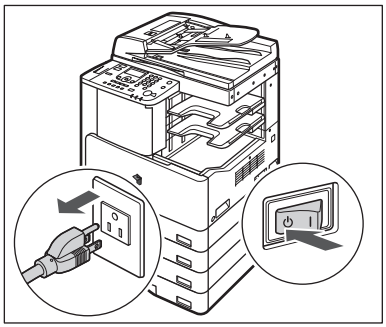

■ **If there is smoke or unusual noise, immediately turn the main power switch OFF, disconnect the power cord from the power outlet, and then contact your local authorized Canon dealer. Using the machine in this state may cause a fire or electrical shock. Also, avoid placing objects around the power plug so that the machine can be disconnected whenever necessary.**

■ **Do not turn the main power switch OFF or open the covers while the machine is in operation. This may result in paper jams.**

■ **Some parts inside the machine are subject to high-voltages and temperatures. Take adequate precautions when inspecting the inside of the machine. Do not carry out any inspections not described in the manuals.**

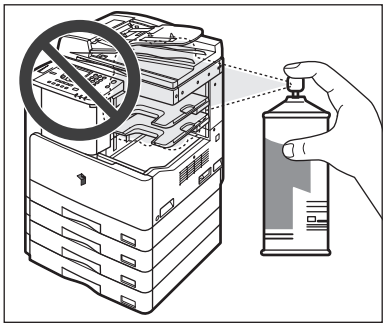

■ **Do not use flammable sprays, such as spray glue near the machine. There is a danger of ignition.**

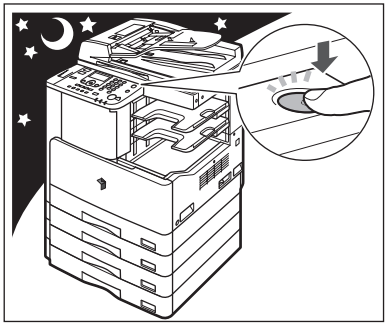

■ **For safety reasons, turn OFF the control panel power switch of the machine when it will not be used for a long period of time, such as overnight. As an added safety measure, turn OFF the main power switch, and disconnect the power cord when the machine will not be used for an extended period of time, such as during consecutive holidays.**

■ **This machine generates a slight amount of ozone or other odors during normal use. Although sensitivity to ozone or other odors may vary, this amount is not harmful. Ozone or other odors may be more noticeable during extended use or long production runs, especially in poorly ventilated rooms. It is recommended that the room be appropriately ventilated, sufficient to maintain a comfortable working environment, in areas of machine operation.**

■ **Use a USB cable shorter than three meters.**

Parts and Their Functions

This section provides you with the names and functions of all of the parts on the outside and inside of the main unit and control panel. Illustrations of the machine with some optional equipment attached to it are also provided. For more information on the optional equipment, parts and their functions, see Chapter 5, “Optional Equipment.”

External View

The imageRUNNER 2422 with the optional Inner 2 Way Tray-E2, Cassette Feeding Module-J1, and Cassette Feeding Module-K1 attached.

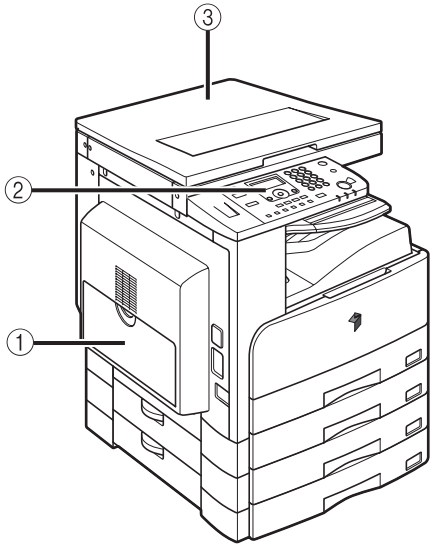

The imageRUNNER 2420 with the optional feeder (DADF-P2), Finisher-U2, Additional Finisher Tray-C1, Cassette Feeding Module-J1, and Cassette Feeding Module-K1 attached.

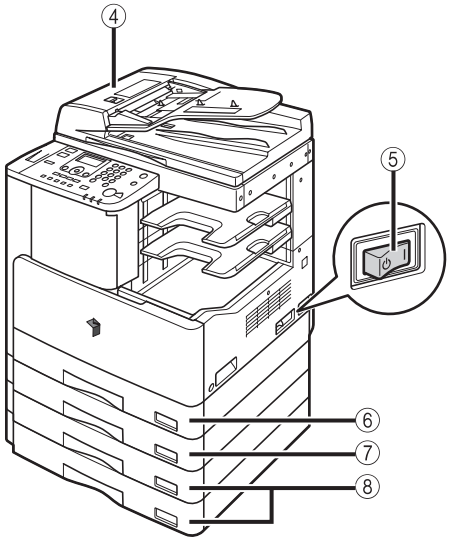

① **Stack Bypass**

Use the stack bypass to feed paper manually, and for loading nonstandard paper stock, such as envelopes. (See “Feeding Paper Using the Stack Bypass,” on p. 2-25.)

② **Control Panel**

Includes the keys, LCD display, and indicators required for operating the machine. (See “Control Panel,” on p. 1-12.)

③ **Platen Cover Type J**

The Platen Cover Type J secures the originals placed on the platen glass.

④ **Feeder (DADF-P2) (Optional)**

Originals placed in the feeder are automatically fed sheet by sheet to the scanning area. The feeder also automatically turns over two-sided originals to make one- or two-sided copies.

⑤ **Main Power Switch**

Press to the “I” side to turn ON the machine. (See “Main Power and Control Panel Power,” on p. 1-14.)

⑥ **Paper Drawer 1**

Holds up to 250 sheets of paper (80 g/m^2).

⑦ **Cassette Feeding Module-J1 (Optional)**

Holds up to 250 sheets of paper (80 g/m^2).

⑧ **Cassette Feeding Module-K1 (Optional)**

The Cassette Feeding Module-K1 provides two additional sources of paper for printing jobs. Each paper drawer holds up to 250 sheets of paper (80 g/m^2).

NOTE

For more information on the optional equipment that can be attached to the machine, see Chapter 5, “Optional Equipment.”

Internal View

The imageRUNNER 2420 with the optional feeder (DADF-P2), Inner 2 Way Tray-E2, Duplex Unit-A1, Cassette Feeding Module-J1, and Cassette Feeding Module-K1 attached.

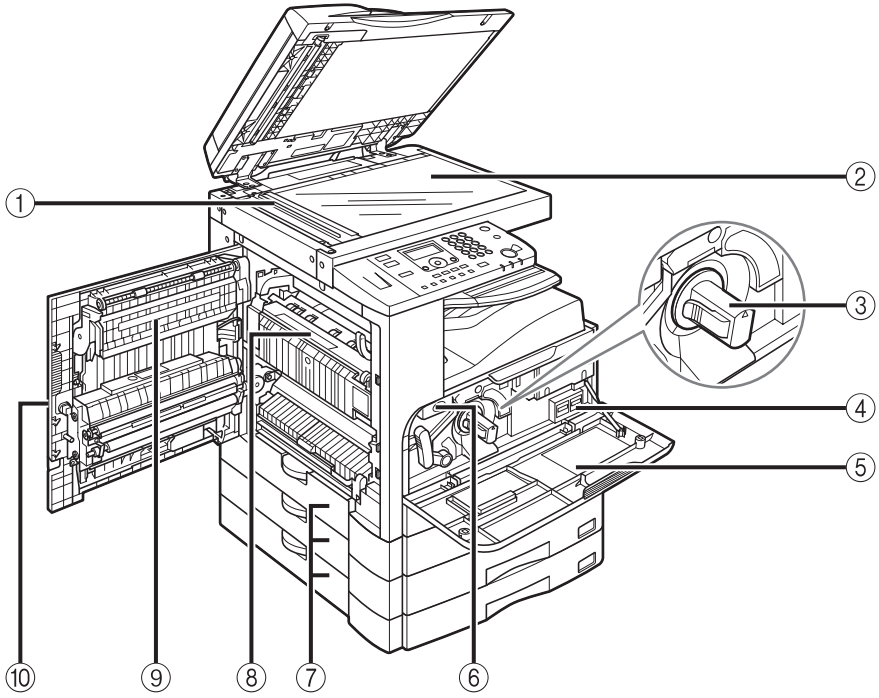

① **Scanning Area**

Originals placed in the feeder are scanned here.

② **Platen Glass**

Place originals here when scanning books, heavyweight originals, thin originals, transparencies, etc.

③ **Toner Cartridge**

When toner runs out, pull out the toner cartridge, and replace it with a new one.
(See “Consumables,” on p. 6-37.)

④ **Counters**

You can check the machine’s copy and print page counts.

⑤ **Front Cover**

Open this cover to replace the toner cartridge or drum unit.

⑥ **Drum Unit**

When the drum unit is full of waste toner, replace it with a new one.

⑦ **Paper Drawer’s Left Cover**

Open these covers when clearing a paper jam in Paper Drawers 2, 3 and 4.

⑧ **Fixing Unit**

If a paper jam occurs in the fixing unit, remove the jammed paper carefully. (See “Fixing Unit,” on p. 7-5.)

⑨ **Duplex Unit-A1 (Optional)**

The duplex unit enables you to use the 2-sided mode for copying or printing. (See Chapter 2, “Advanced Operations,” in the *Copying Guide* and Chapter 1, “Using the Machine as a Printer,” in the *UFR II Printer Guide*.)

⑩ **Left Cover**

Open this cover to clear a paper jam inside the main unit.

Control Panel

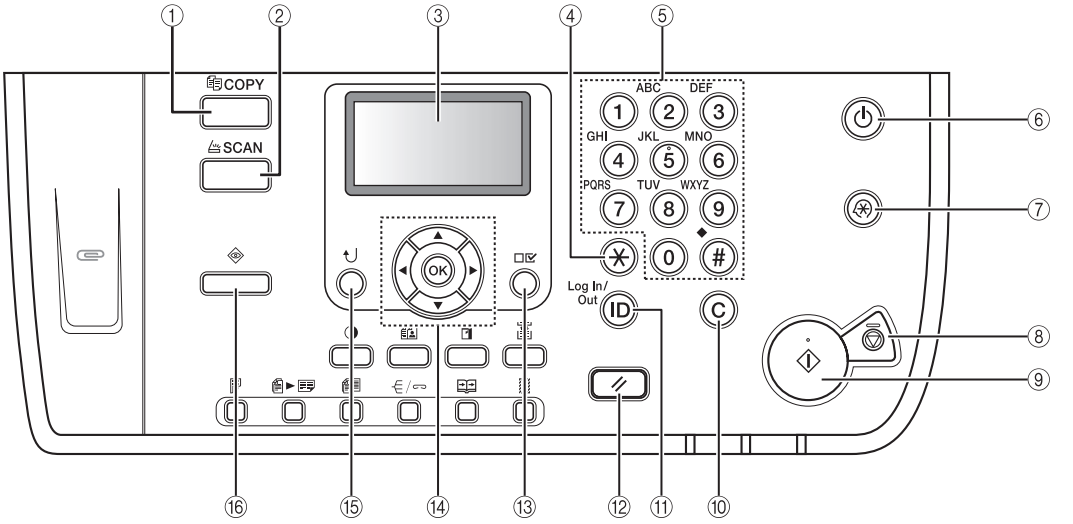

① COPY **key**

Press to switch the machine to the Copy mode.

② SCAN **key**

Press to enable the Network Scan function. (See the *Network ScanGear Guide*.)

③ **LCD display**

Displays messages, prompts, text, settings, numbers, and graphics when operating the machine.

④ **(Tone) key**

Press to change the entry mode when you want to enter characters and/or numbers on the LCD display.

⑤ **Numeric keys**

Use to enter alphanumeric characters.

⑥ **Control Panel Power Switch (Sub Power Supply)**

Press to turn the control panel ON or OFF. When the control panel is turned OFF, the machine is in the Sleep mode.

⑦ **(Additional Functions) key**

Press to access the Additional Functions menu.

⑧ **(Stop) key**

Press to stop copying or scanning.

⑨ **(Start) key**

Press to start an operation.

⑩ **(Clear) key**

Press to clear entered values or characters.

⑪ **(ID) key**

Press to log in to/out of the machine when the machine is managed with Department IDs/User IDs.

⑫ **(Reset) key**

Press to cancel all settings and return to the Standby display.

⑬ **(View Settings) key**

Press to confirm your settings.

⑭ **▼, ▲, ◀ and ▶ keys**

Use [▼], [▲], [◀], or [▶] to move the cursor position or decrease or increase values.

⑮ **(Back) key**

Press to go back to the previous items in the menu.

⑯ **(System Monitor) key**

Press to check the status of the machine, including copy and print jobs.

■ Control Panel Continued

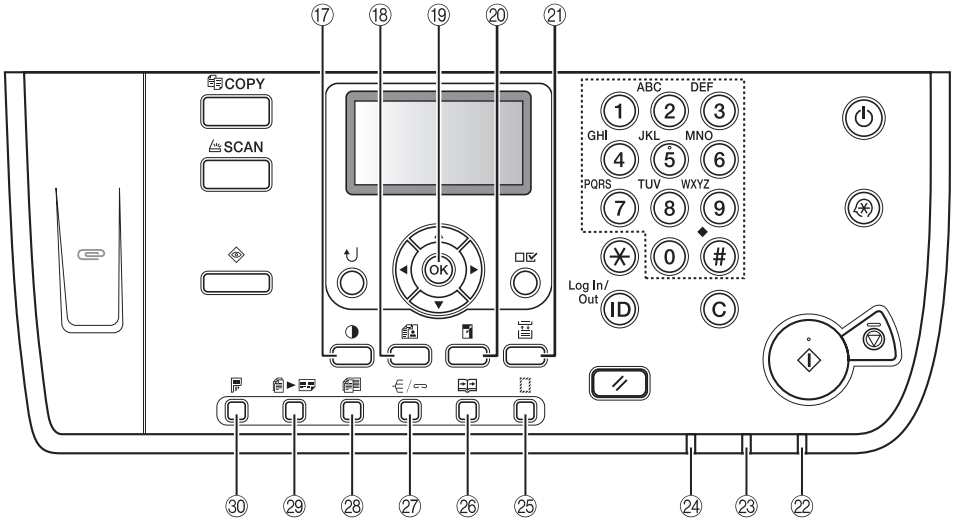

⑰ **(Density) key**

Press to darken or lighten the density of the documents you want to copy.

⑱ **(Image Quality) key**

Press to select the image quality best suited to the quality of your originals.

⑲ **OK key**

Press to confirm and accept your settings.

⑳ **(Copy Ratio) key**

Press to enlarge or reduce copies. For more information, see Chapter 1, "Basic Operations," in the *Copying Guide*.

㉑ **(Paper Select) key**

Press to select the desired paper source.

㉒ **Main Power Indicator**

Lights when the main power is turned ON.

㉓ **Error Indicator**

Flashes or lights red if an error occurs in the machine.

㉔ **Processing/Data Indicator**

Flashes or lights green when the machine is performing operations.

㉕ **(Frame Erase) key**

Press to set the Frame Erase mode. For more information, see Chapter 2, "Advanced Operations," in the *Copying Guide*.

㉖ **(2-Page Separation) key**

Press to set the 2-Page Separation mode. For more information, see Chapter 2, "Advanced Operations," in the *Copying Guide*.

㉗ **(Finishing) key**

Press to set the Finishing mode. For more information, see Chapter 2, "Advanced Operations," in the *Copying Guide*.

㉘ **(Different Size Originals) key**

Press to set the Different Size Originals mode. For more information, see Chapter 2, "Advanced Operations," in the *Copying Guide*.

㉙ **(Image Combination) key**

Press to set the Image Combination mode. For more information, see Chapter 2, "Advanced Operations," in the *Copying Guide*.

㉚ **(2-Sided) key**

Press to set the 2-Sided mode. For more information, see Chapter 2, "Advanced Operations," in the *Copying Guide*.

Main Power and Control Panel Power

The machine is provided with two power switches, a main power switch and a control panel power switch.

How to Turn ON the Main Power

This section explains how to turn ON the main power.

1 Make sure that the power plug is firmly inserted into the power outlet.

WARNING

Do not connect or disconnect the power cord with wet hands, as this may result in electrical shock.

2

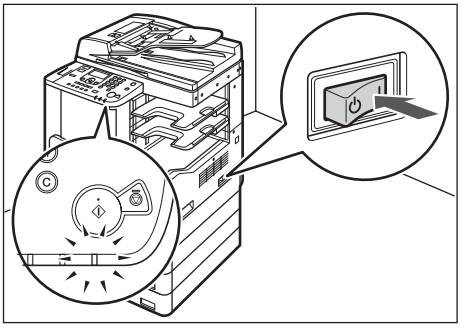

Press the main power switch (located on the right side of the machine) to "I" side.

The main power indicator on the control panel lights up when the main power is turned ON.

IMPORTANT

- If the main power indicator does not light up, make sure that the power plug is properly inserted into the power outlet.
- If the Cassette Heater Unit-30 is attached, the machine will enter the Sleep mode when you press the control panel power switch to OFF while the machine is ON. For more information about the Sleep mode, see "Auto Sleep Time," on p. 3-30. For more information on the Cassette Heater Unit-30, contact your local authorized Canon dealer.

NOTE

If you want to turn the main power OFF, turn the control panel power switch OFF, and then press the main power switch to the "⏻" side. You can also use the Auto Shutdown Time setting to shut down the machine. For more information, see "Auto Shutdown Time," on p. 3-33.

3



The screen on the left is displayed until the machine is ready to scan.

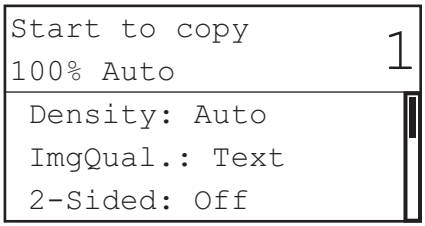

The screen on the left is displayed when the machine is ready to scan.

IMPORTANT

If you turn OFF the main power, wait at least 10 seconds before turning the main power back ON.

NOTE

- If the message <Dept. ID/Pass Input> appears, enter your Department ID (and password). (See "Entering the Department ID and Password," on p. 2-10.)
- If the message <Enter User ID/Pass> appears, enter your User ID (and password). (See "Entering a User ID and Password," on p. 2-12.)
- The default copy settings are:
  - Copy Ratio: Direct (100%)
  - Paper Selection: Auto Paper Selection
  - Copy Density: Auto Density Control
  - Copy Quantity: 1
  - Image Quality: Text
- The default settings for the Copy function of the machine are already set at the factory, but you can change them to suit your needs. (See Chapter 3, "Customizing Settings," in the *Copying Guide*.)
- You can select which functions to display on the Standby display when turning the main power ON, according to the Additional Functions menu. (See "Initial Function at Power ON," on p. 3-5.)

Control Panel Power Switch

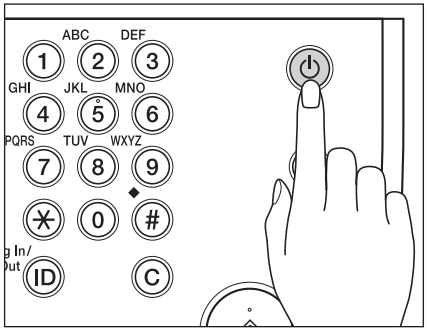

To turn the control panel ON or OFF, press the control panel power switch. When the control panel is turned OFF, the machine is in the Sleep mode.

Control Panel Power Switch	Machine Status
ON	Standby mode (Ready for immediate copying or printing)
OFF	Sleep mode

NOTE

- The machine will not enter the Sleep mode if it is scanning or printing. (See “Auto Sleep Time,” on p. 3-30.)
- The machine can receive and print documents from a computer when it is in the Sleep mode.

Using the Menus and Control Panel Keys

This section provides a brief overview on how to use the control panel keys to open menus and make selections.

Standby Display

The illustrations below are examples of the Standby display for the Copy and Network Scan modes. The Standby display differs depending on which mode is selected.

■ Copy Mode

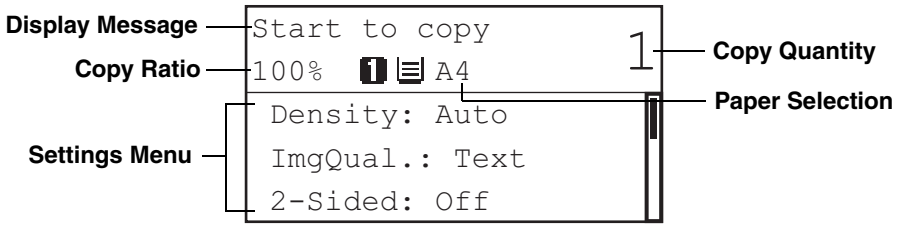

NOTE

For more information on the Copy function, see the *Copying Guide*.

■ Network Scan Mode

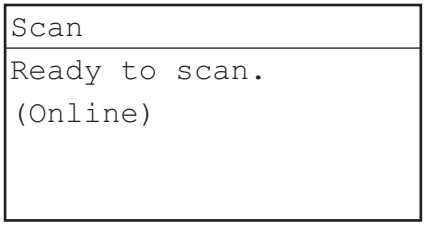

IMPORTANT

The Network Scan function is available only when the optional Network Kit is attached to the machine.

NOTE

For more information on the Network Scan function, see the *Network ScanGear Guide*.

Using the Menus

The machine employs a menu system that you can use to register important information or set up important features. Follow the procedure below to display and operate these menus.

IMPORTANT

By default, the machine automatically returns to the Standby display if you do not press a key or operate the machine for two minutes. In this case, you will have to start the procedure from the beginning. For more information, see “Auto Clear Time,” on p. 3-31.

1 Press (Additional Functions).

The Additional Functions menu appears.

2

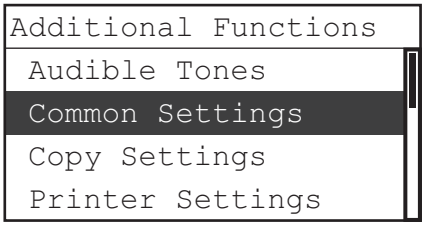

Use [▼] or [▲] to display the desired menu item → press [OK].

There are eight Additional Functions menu items.

3 Use [▼] or [▲] to browse through the menu items → press [OK] to go to the next menu level.

4 Press (Reset) to return to the Standby display.

System Settings

It is necessary to set up the machine before using it on a network, as a printer.

For instructions on setting up the machine, see the following guides or section:

■ **Connecting the Machine to a Computer or Network**
See the *User's Guide*.

■ **Setting up the Network**
See the *Network Guide*.

■ **Setting up the Printer**
See the *UFR II Printer Guide*.

■ **Installing the Printer Driver**
See the *Printer Driver Installation Guide* or *Mac UFR II Printer Driver Installation Guide*.

■ **System Manager Settings**
See "Specifying the System Manager Settings," on p. 4-2.

Basic Operations

2
CHAPTER

This chapter describes the main features and basic operations of the machine.

What This Machine Can Do 2-2
Entering Characters 2-6
Entering Alphanumeric Characters 2-6
Entering the Department ID and Password 2-10
Entering a User ID and Password. 2-12
Placing Originals. 2-14
Orientation 2-14
Platen Glass 2-16
Feeder (DADF-P2) (Optional). 2-18
Basic Copying. 2-20
Feeding Paper Using the Stack Bypass 2-25
Basic Printing 2-33
Basic Remote Scanning 2-34
Checking Job Status and Log. 2-37
Canceling a Job 2-39
Using the Stop Key. 2-39
Using the System Monitor Screen 2-40

What This Machine Can Do

All the elements you will ever need in a digital multitasking machine.

The imageRUNNER 2422/2420 incorporates a rich array of input and output features that can greatly enhance your efficiency.

Equipped with features that meet the needs of document work in a digitized office, the imageRUNNER 2422/2420 represents the ultimate in digital multitasking machines.

Copying

In addition to normal copying functions, convenient new functions, such as Image Combination, which enables you to automatically reduce two- or four-page originals to fit on the selected paper size, and Different Size Originals for copying originals of different sizes together in one copy operation, are provided to increase your productivity.

For more information, see the *Copying Guide*.

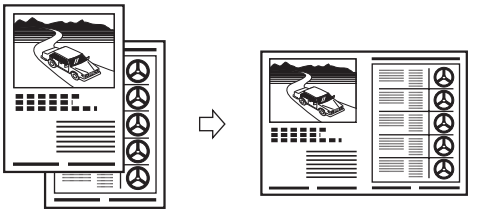

2 on 1 Combination

Printing

This machine uses UFRII LT (Ultra Fast Rendering II LT) Technology, which utilizes a newly invented printing algorithm to minimize file processing and achieve maximum performance.

For instructions on setting up the machine as a printer, see the *User's Guide*.

For instructions on using the printer driver, see the *Windows Printer Driver Guide*, *Mac Printer Driver Guide*, or the help on the printer driver.

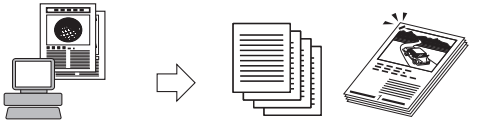

Sending data from a computer

Printing

Network Interface

With the optional Network Kit, the imageRUNNER 2422/2420 can be connected to a network using Ethernet. Connecting to a network enables you to use the Remote UI.

For instructions on setting up the network connection, see the *Network Guide*.

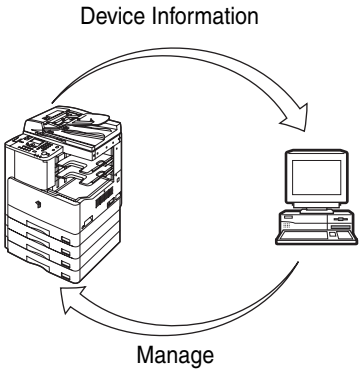

Using the Remote User Interface

If the network connection is available, you can control functions, such as confirming the status of the machine and job operations, all from your computer's Web browser.

Once the Ethernet interface port is configured properly, the imageRUNNER 2422/2420 can be controlled and set up through the Remote UI and network. For instructions on configuring the Ethernet port, see the *Network Guide*.

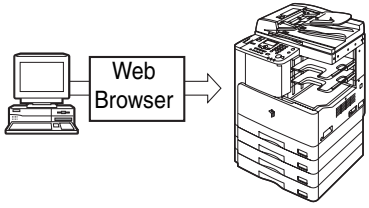

Network Scanning

If the network connection is available, the Network Scan function enables you to use the imageRUNNER 2422/2420 as a conventional scanner. You can scan a document using the machine, and read the data in an application on your computer. To use this function, the machine must be connected to an IPv4 network, and the Color Network ScanGear software* must be installed on your computer.

*The Color Network ScanGear software is supplied on the accompanying CD-ROM. For more information on the Network Scan function, see the *Network ScanGear Guide*.

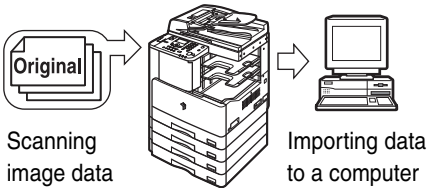

Versatile Configurations

The Additional Functions menu enables you to make common settings related to many functions of the machine, as well as customize specific functions to suit your needs. (See Chapter 3, “Useful Functions and Settings.”) You can access the menu by pressing (Additional Functions).

For details on Copy, Printer, and Network Settings, which are not explained in this manual, see the following manuals:

-Copy Settings: The *Copying Guide*

-Printer Settings: The *UFR II Printer Guide*

-Network Settings: The *Network Guide*

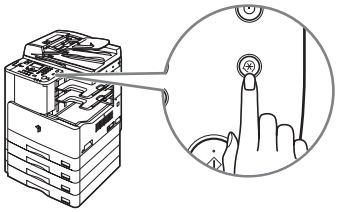

Energy Conservation

You can conserve power efficiently by setting the Sleep mode and the Auto Shutdown Time setting.

You can set the machine to enter the Sleep mode manually, by pressing the control panel power switch, or specify to have the machine enter the Sleep mode at a preset time. (See “Auto Sleep Time,” on p. 3-30.)

You can set the machine to automatically shut down by enabling the Auto Shutdown Time setting. The machine turns OFF the main power switch after the specified period of idle time has elapsed since entering the Sleep mode. (See “Auto Shutdown Time,” on p. 3-33.)

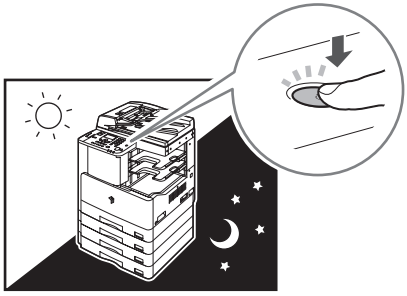

Security

You can protect the machine from unauthorized access by setting Department ID Management. If Department ID Management is enabled, only the users who enter the correct Department ID and password can gain access to the machine. (See “Department ID Management,” on p. 4-8.)

If the network connection is available, you can enhance the machine’s security by setting User ID Management. User ID Management enables you to block unauthorized access to the machine by registering User IDs and passwords from the Remote UI. (See the *Remote UI Guide*.)

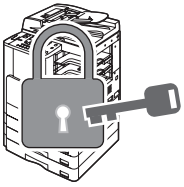

System Monitor

The System Monitor screen enables you to check the status of the machine, and cancel copy and print jobs.

For instructions on checking the status of copy, and print jobs, see “Checking Job Status and Log,” on p. 2-37.

For instructions on canceling a job, see “Canceling a Job,” on p. 2-39.

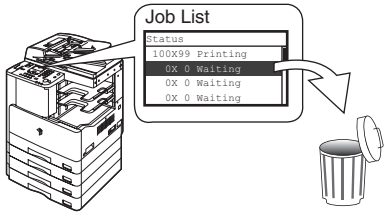

Other Useful Functions

This machine provides other useful functions as listed below.

-Auto Paper Selection (APS)/Auto Drawer Switching (ADS)

(See “Auto Paper Selection/Auto Drawer Switching,” on p. 3-11.)

-Auto Clear (See “Auto Clear Time,” on p. 3-31.)

-Auto Orientation (See the *Copying Guide*.)

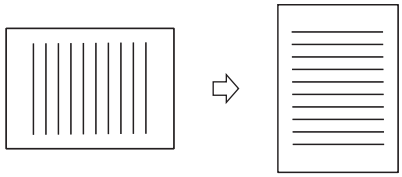

Auto Orientation

Entering Characters

For screens that require alphanumeric entries, enter characters using ① - ⑩ (numeric keys) on the control panel, as shown below.

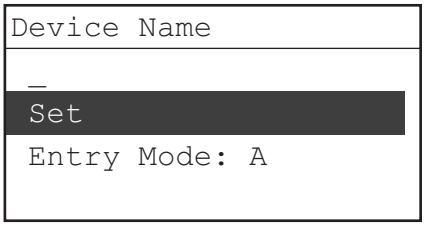

Entry Mode	Display	What It Does
Alphabet	A	Enables you to enter upper case letters and symbols.
	a	Enables you to enter lower case letters and symbols.
	Aa	Enables you to enter upper case letters, lower case letters, and symbols.
Number	1 12	Enables you to enter numbers.

Entering Alphanumeric Characters

Example: Entering <Canon> as the device name.

NOTE

The procedure below uses the Device Name screen as an example of entering characters. For instructions on entering the device name, see “Device Information Settings,” on p. 4-6.

1

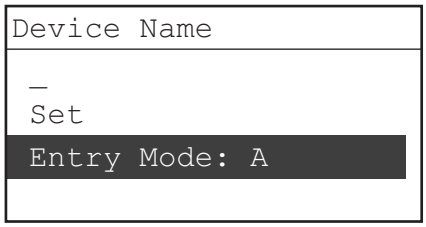

To select the desired entry mode ('A' in this case), press ⊛ (Tone), or use [▼] or [▲] to select <Entry Mode:> → press [OK].

The entry mode changes every time you press ⊛ (Tone) in either of the following orders:

- 'A' → 'a' → '1'
- 'Aa' → '12'

● **If ⊛ (Tone) is pressed:**

❑ Proceed to step 3.

● **If <Entry Mode:> is selected:**

❑ Proceed to step 2.

2

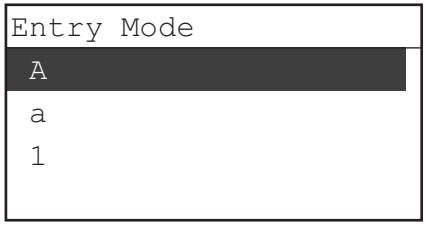

Use [▼] or [▲] to select the desired entry mode from 'A', 'a', and '1' → press [OK].

The selected mode is set.

3 Press the appropriate numeric keys containing the characters that you want to enter.

Each key contains a group of upper and/or lower case letters, and available characters depend on the selected entry mode. For example, ABC 2 contains the letters <ABCabc> when the entry mode is 'Aa'. To enter a symbol, select 'A', 'a', or 'Aa' as the entry mode and press * #.

Key	Characters Available in Each Entry Mode		
	'A'	'a'	'Aa'
1	(Not Available)		
ABC 2	ABC	abc	ABCabc
DEF 3	DEF	def	DEFdef
GHI 4	GHI	ghi	GHIghi
JKL 5	JKL	jkl	JKLjkl
MNO 6	MNO	mno	MNOmno
PQRS 7	PQRS	pqrs	PQRSpqrs
TUV 8	TUV	tuv	TUVtuv
WXYZ 9	WXYZ	wxyz	WXYZwxyz
* #	-.*#!",;: ^_= / l'?$@%&+\˜( )[ ]{ }< >		

NOTE

Numbers can be entered by selecting the entry mode '1' or '12' (Number) and pressing the appropriate numeric keys.

4 Enter <Canon>.

- ❑ Press ABC 2 repeatedly until an uppercase <C> appears.
- ❑ Press ✳ to select the entry mode 'a' → press ABC 2 until a lowercase <a> appears.
- ❑ Press [▶] to move the cursor to the right → press MNO 6 until a lowercase <n> appears.
- ❑ Press [▶] to move the cursor to the right → press MNO 6 until a lowercase <o> appears.
- ❑ Press [▶] to move the cursor to the right → press MNO 6 until a lowercase <n> appears.

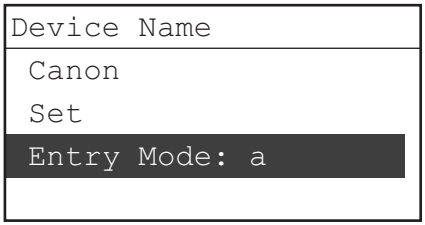

<Canon> is displayed.

NOTE

- To enter a space, press [▶].
- To move the cursor, press [◀] or [▶].
- If you make a mistake when entering a character, press [◀] or [▶] to position the cursor under the incorrect character → press C (Clear) to delete the incorrect character → enter the correct character.
- To delete all of the entered characters, press and hold C (Clear).
- The available entry modes, and the maximum number of characters that you can enter vary, depending on the types of entries you are making.

5 When you have entered all characters, use [▼] or [▲] to select <Set> → press [OK].

Entering the Department ID and Password

If Department ID Management has been set, the Department ID (and password) must be entered before operating the machine.

NOTE

For instructions on setting the Department ID and password, see “Department ID Management,” on p. 4-8.

1

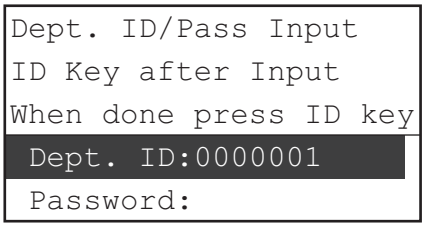

Enter your Department ID (up to seven digits) using ⓪ - ⑨ (numeric keys).

NOTE

If you make a mistake when entering the Department ID, press Ⓒ (Clear) → enter the correct Department ID.

- **If a password has been set for the Department ID:**

  ❑ proceed to step 2.

- **If no password has been set for the Department ID:**

  ❑ proceed to step 3.

2

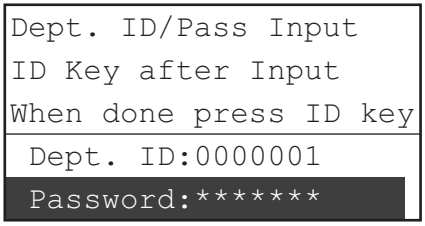

Use [▼] or [▲] to select <Password> → enter the password (up to seven digits) using ⓪ - ⑨ (numeric keys).

The numbers that you enter for the password are displayed as asterisks (*******).

NOTE

If you make a mistake when entering the password, press Ⓒ (Clear) → enter the correct password.

3 Press ⓘ (ID).

The Standby display appears.

NOTE

If the Department ID or password that you enter is incorrect, the message <Unregistered number. Enter number again.> appears on the LCD display. In this case, repeat this procedure from step 1.

4 When your operations are complete, press ⓘ (ID) to log out.

The display for entering the Department ID appears.

NOTE

- To perform operations again, you have to re-enter your Department ID and password.
- If you do not press ⓘ (ID) after you are finished operating the machine, any subsequent copies, scans, or prints made are added to the total of the Department ID you previously entered to log on to the machine.
- The display for entering the Department ID and password automatically appears after the set Auto Clear Time elapses. (See “Auto Clear Time,” on p. 3-31.)
- After pressing ⓘ (ID), all settings are canceled, and the machine returns to the Standby display.

Entering a User ID and Password

If User ID Management in System Settings (from the Additional Functions menu) is set to 'On', and User IDs and passwords are registered in the machine, you must enter a User ID and password before using the machine.

IMPORTANT

- The User ID Management function is available only when the optional Network Kit is attached to the machine.
- To log in to the machine, User IDs and passwords must be registered in the machine from the Remote UI beforehand. For instructions on registering a User ID and password, see the *Remote UI Guide*.

1

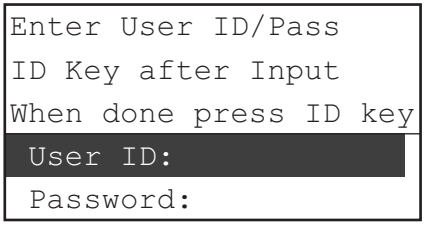

Use [▼] or [▲] to select <User ID:> → press [OK].

2

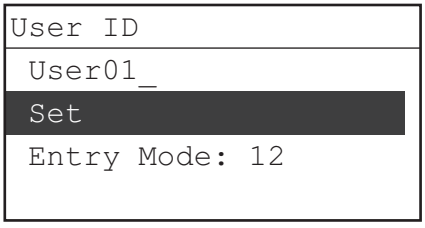

Enter your User ID using ① - ⑨ (numeric keys) → use [▼] or [▲] to select <Set> → press [OK].

NOTE

For instructions on entering characters, see "Entering Characters," on p. 2-6.

● **If a password has been set for the User ID:**

❑ proceed to step 3.

● **If no password has been set for the User ID:**

❑ proceed to step 5.

3

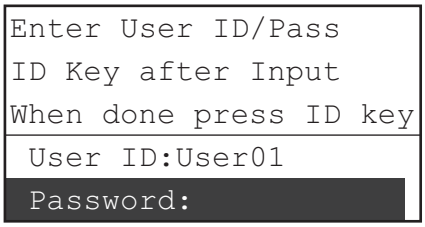

Use [▼] or [▲] to select <Password:> → press [OK].

4

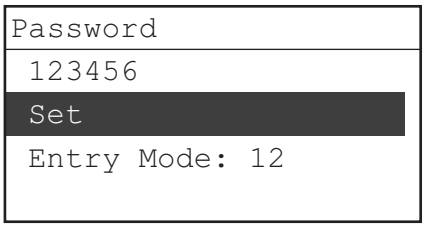

Enter the user password using ① - ⑩ (numeric keys) → use [▼] or [▲] to select <Set> → press [OK].

NOTE

For instructions on entering characters, see “Entering Characters,” on p. 2-6.

5 Press ⓘⓓ (ID).

The Standby display appears.

NOTE

If the User ID or password that you enter is incorrect, the message <Unregistered number. Enter number again.> will appear on the LCD display. Repeat this procedure from step 1.

6 When your operations are complete, press ⓘⓓ (ID) to log out.

The display for entering the User ID appears.

NOTE

- To perform operations again, you must re-enter your User ID and password.
- If you do not press ⓘⓓ (ID) after you are finished operating the machine, any subsequent copies, scans, or prints made are added to the total of the User ID you previously entered to log on to the machine.
- The display for entering the User ID and password automatically appears after the set Auto Clear Time elapses. (See “Auto Clear Time,” on p. 3-31.)
- After pressing ⓘⓓ (ID), all settings are canceled, and the machine returns to the Standby display.

Placing Originals

Place your originals on the platen glass or into the feeder, depending on the size and type of the original, and the copy modes you want to use.

■ Platen Glass

Place your originals on the platen glass when copying bound originals (such as books and magazines), heavy or lightweight originals, and transparencies.

■ Feeder (DADF-P2) (Optional)

Place your originals into the feeder when you want to copy several originals at a time, and then press (Start). The machine automatically feeds the originals to the scanning area and scans them. If you are copying in the 2-Sided mode, two-sided originals can also be automatically turned over and scanned as two-sided documents.

Orientation

You can place an original either vertically or horizontally. Always align the top edge of your original with the back edge of the platen glass (by the arrow in the top left corner), or with the back edge of the feeder.

Platen Glass (View from Above)

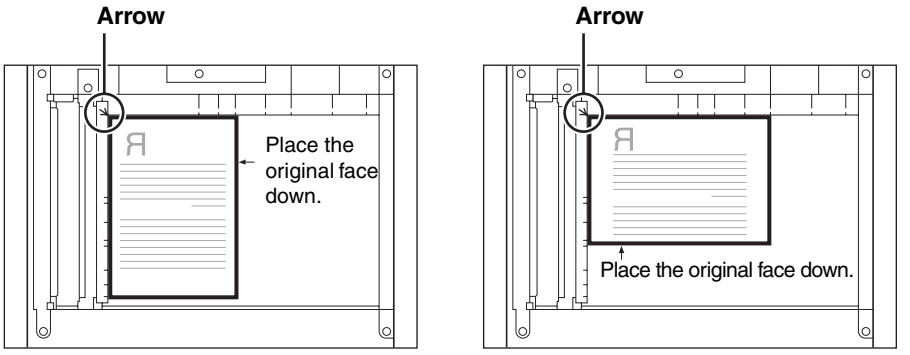

Vertical Placement **Horizontal Placement**

Feeder (View from Above)

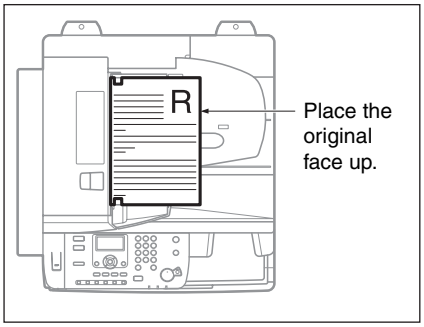

Vertical Placement

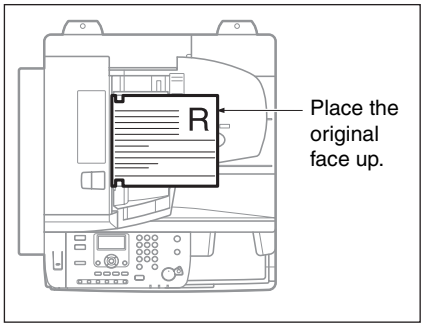

Horizontal Placement

NOTE

- If the top edge of the original is not aligned with the back edge of the platen glass (by the arrow in the top left corner), your original may not be scanned correctly, depending on the copy mode you have set.
- A4 and A5 originals can be placed either vertically or horizontally. However, the scanning speed for horizontally placed originals is somewhat slower than for vertically placed originals. Place originals horizontally when printing with a preset copy ratio, such as when enlarging an A4 or A5 original onto A3 paper. (See Chapter 1, “Basic Operations,” in the *Copying Guide*.)
- Horizontally placed A4 and A5 originals are referred to as A4R and A5R.
- A3 originals must be placed horizontally.
- To achieve the same output orientation using the optional feeder as when the original is placed on the platen glass, place the original upside down and face up. However, if an appropriate size of paper is not loaded for the Staple mode, the output is rotated automatically.

Platen Glass

You should use the platen glass when copying bound originals (such as books and magazines), heavy or lightweight originals, and transparencies. (See Chapter 1, “Basic Operations,” in the *Copying Guide*.) When copying ID cards using the ID Card Copy function, you must use the platen glass. (See Chapter 2, “Advanced Operations,” in the *Copying Guide*.)

1

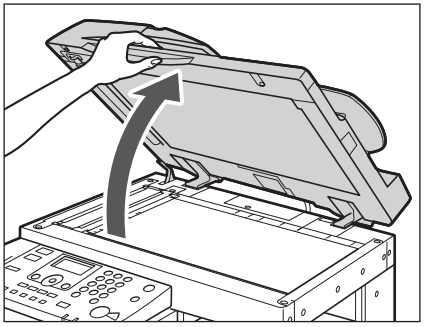

Lift the feeder/platen cover.

2

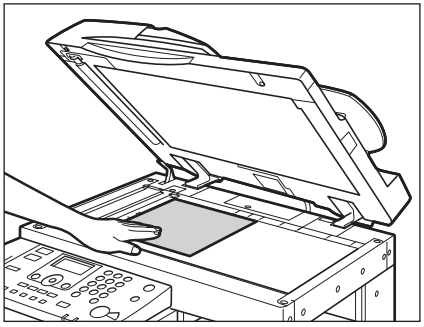

Place your original face down.

The original that you want to copy must be placed face down. Align the top edge of your original with the back edge of the platen glass (by the arrow in the top left corner).

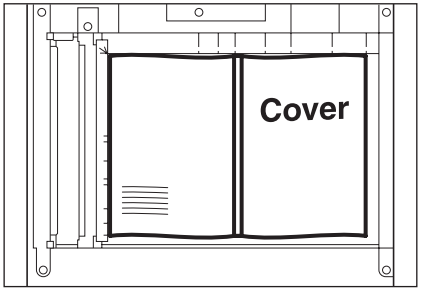

Place books and other bound originals on the platen glass in the same way as described above.

NOTE

When you are enlarging an A4 or A5 original onto A3 paper, place the original horizontally on the platen glass, and align it with the A4R or A5R marks.

3

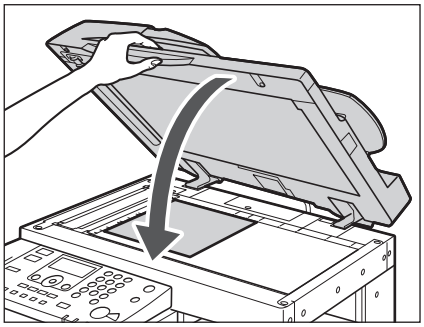

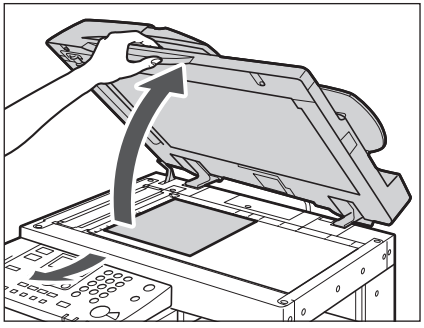

Gently close the feeder/platen cover.

CAUTION

- **Close the feeder/platen cover gently to avoid catching your hands, as this may result in personal injury.**
- **Do not press down hard on the feeder/platen cover when using the platen glass. Doing so may damage the platen glass and result in personal injury.**

NOTE

When scanning is complete, lift the feeder/platen cover, and remove the original from the platen glass.

Feeder (DADF-P2) (Optional)

You should use the feeder when you want to copy several originals at a time. With the feeder, the machine automatically feeds the originals to the scanning area and scans them. If you are copying in the 2-Sided mode, two-sided originals can also be automatically turned over and scanned as two-sided documents.

You can place the following originals into the feeder's original supply tray:

- Weight:
  - 52 g/m^2 to 105 g/m^2 (37 g/m^2 to 52 g/m^2 and 106 g/m^2 to 128 g/m^2 when scanning a single page document)
- Size:
  - A4, A4R, A3, A5, and A5R
- Tray capacity:
  - A4, A4R, A5, and A5R: 50 sheets (80 g/m^2)
  - A3: 25 sheets (80 g/m^2)

IMPORTANT

- Do not place the following types of originals into the feeder:
  - Originals with tears or large binding holes
  - Severely curled originals or originals with sharp folds
  - Clipped or stapled originals
  - Carbon backed paper or other originals which may not feed smoothly
  - Transparencies and other highly transparent originals
- If the same original is fed through the feeder repeatedly, the original may fold or become creased, and make feeding impossible. Limit repeated feeding to a maximum of 30 times. (This number may vary, depending on the type and quality of the original.)
- If the feeder rollers are dirty from scanning originals written in pencil, clean the feeder. (See "Routine Cleaning," on p. 6-24.)
- Always smooth out any folds in your originals before placing them into the feeder.
- Set the originals one by one if they are very thin (37 g/m^2 to 52 g/m^2) or very thick (106 g/m^2 to 128 g/m^2).

1

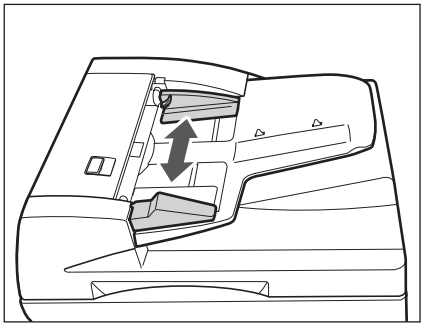

Adjust the slide guides to fit the size of your originals.

2

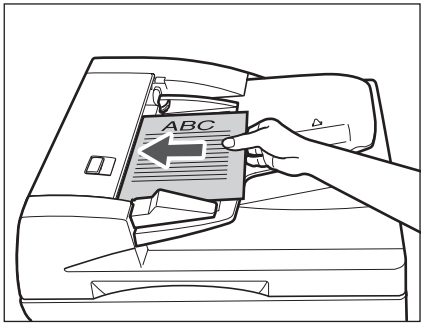

Neatly place your originals with the side to be copied face up into the original supply tray.

Place your originals as far into the feeder as they will go.

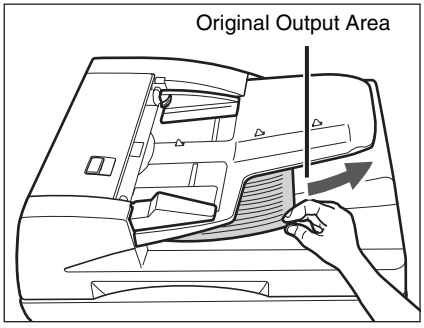

IMPORTANT

- Do not add or remove originals while they are being scanned.
- When scanning is complete, remove the originals from the original output area to avoid paper jams.

NOTE

- When you are enlarging an A4 or A5 original onto A3 paper, place the original horizontally.
- The scanned originals are output to the original output area in the order that they are fed into the feeder.
- You can place different size originals together into the feeder if you set the Different Size Originals mode. (See Chapter 2, “Advanced Operations,” in the *Copying Guide*.)

Basic Copying

This section describes the flow of basic copy operations.

NOTE

- For instructions on turning ON the machine, see “Main Power and Control Panel Power,” on p. 1-14.
- For instructions on routine maintenance, see Chapter 6, “Routine Maintenance.”
- The output quality may deteriorate if the platen glass is dirty. Always keep the platen glass clean.
- Do not touch the optional feeder or platen cover while copying. Rocking the feeder or platen cover may distort the image being copied.

1 Press the appropriate keys in accordance with the messages displayed on the LCD display.

If there are no messages displayed, proceed to step 2.

● **If the message <Dept. ID/Pass Input> appears:**

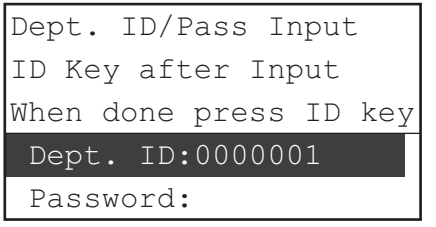

❑ Enter your Department ID (up to seven digits) using ⓪ - ⑨ (numeric keys).

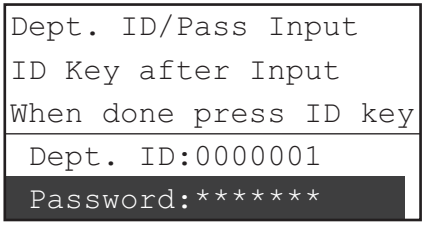

❑ Use [▼] or [▲] to select <Password:> → enter the password (up to seven digits) using ⓪ - ⑨ (numeric keys).

❑ Press ⓘⓓ (ID).

NOTE

For instructions on using Department ID Management, see “Department ID Management,” on p. 4-8.

● **If the message <Enter User ID/Pass> appears:**

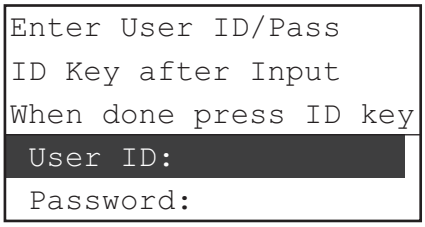

❑ Use [▼] or [▲] to select <User ID:> → press [OK].

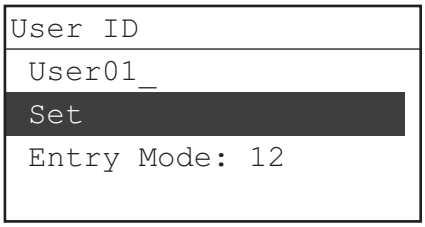

❑ Enter your User ID using ① - ⑨ (numeric keys) → use [▼] or [▲] to select <Set> → press [OK].

NOTE

For instructions on entering characters, see "Entering Characters," on p. 2-6.

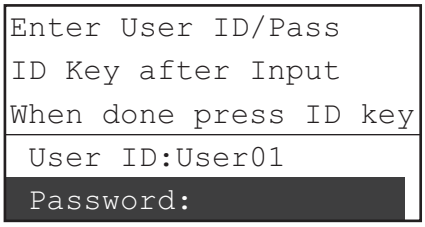

❑ Use [▼] or [▲] to select <Password:> → press [OK].

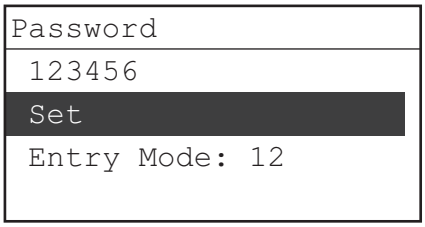

❑ Enter the user password using ① - ⑨ (numeric keys) → use [▼] or [▲] to select <Set> → press [OK].

NOTE

For instructions on entering characters, see "Entering Characters," on p. 2-6.

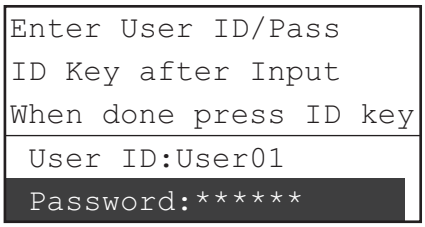

❑ Press ID (ID).

NOTE

For instructions on using User ID Management, see Chapter 3, "Customizing Settings," in the *Remote UI Guide*.

2

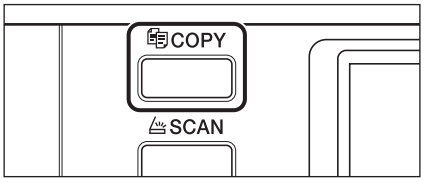

Press COPY.

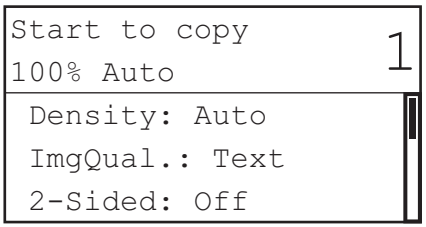

The Standby display appears for the Copy function.

3 **Place your originals.**

NOTE

For help, see “Placing Originals,” on p. 2-14.

4

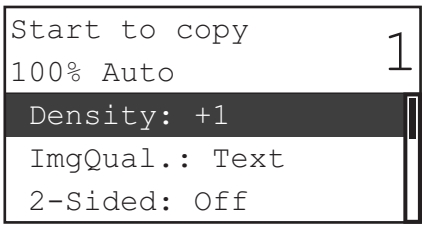

Specify the desired copy settings.

NOTE

For more information on specifying copy settings, see Chapter 1, “Basic Operations,” and Chapter 2, “Advanced Operations,” in the *Copying Guide*.

5

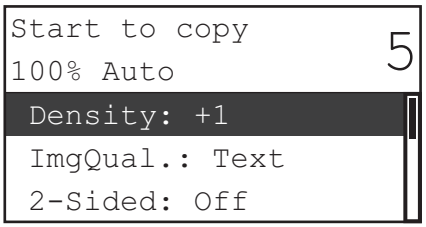

Enter the desired copy quantity (from 1 to 99) using ⓪ - ⑨ (numeric keys).

6 Press (Start).

● If the original is placed in the optional feeder:

Copying starts.

❑ Proceed to step 7.

IMPORTANT

You cannot change copy mode settings, such as the copy quantity, paper size, and copy ratio, while the machine is copying.

NOTE

- If there is a current job, the machine scans the original and waits to print it. Printing starts when the current job is complete.
- You can specify copy settings and scan originals while the machine is in the waiting state, such as when the machine has just been turned ON, after a paper jam is cleared, or after a cover on the main unit or an optional unit is closed. Copying automatically begins as soon as the machine is ready.
- If the message <Memory full> appears on the LCD display, divide your originals into several sets and copy them separately.

● If the original is placed on the platen glass:

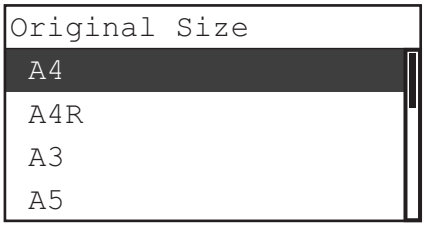

❑ Use [▼] or [▲] to select the size of the placed original → press [OK].

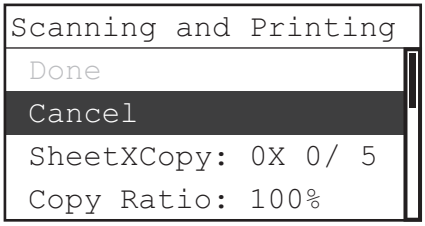

Copying starts.

If you want to cancel the job, use [▼] or [▲] to select <Cancel> → press [OK] → use [◀] or [▶] to select <Yes> → press [OK].

There are several ways to cancel jobs. For more information, see “Canceling a Job,” on p. 2-39.

IMPORTANT

You cannot change copy mode settings, such as the copy quantity, paper size, and copy ratio, while the machine is copying.

NOTE

- You will not be asked for the size of the original in the following cases:
  - The paper size set for a specific paper source has been selected manually. (See Chapter 1, “Basic Operations,” in the *Copying Guide*.)
  - The Image Combination function is set. (See Chapter 2, “Advanced Operations,” in the *Copying Guide*.)
  - Either <Org. Frame Erase> or <Book Frame Erase> is set. (See Chapter 2, “Advanced Operations,” in the *Copying Guide*.)
- If there is a current job, the machine scans the original and waits to print it. Printing starts when the current job is complete.
- You can specify copy settings and scan originals while the machine is in the waiting state, such as when the machine has just been turned ON, after a paper jam is cleared, or after a cover on the main unit or an optional unit is closed. Copying automatically begins as soon as the machine is ready.
- If the message <Memory full> appears on the LCD display, divide your originals into several sets and copy them separately.

7 If you want to start copying the next original while printing for the current job is in progress, repeat steps 3 to 6.

IMPORTANT

You cannot reserve a copy job when paper is jammed or loaded in none of the paper drawers or stack bypass.

NOTE

- You can reserve up to five copy jobs, including the current job.
- You can set different copy modes and paper sources, including the stack bypass, for each reserved job. For instructions on using the stack bypass, see “Feeding Paper Using the Stack Bypass,” on p. 2-25.

8 When copying is complete, remove your originals.

9 If Department ID Management or User ID Management is set, press (ID) (ID).

NOTE

- For instructions on using Department ID Management, see “Department ID Management,” on p. 4-8.
- For instructions on using User ID Management, see Chapter 3, “Customizing Settings,” in the *Remote UI Guide*.

Feeding Paper Using the Stack Bypass

If you are making prints on transparencies, labels, nonstandard paper size stock, or envelopes, load the paper stock into the stack bypass.

IMPORTANT

- If you are using the stack bypass as a paper source for the Copy function, you must select the stack bypass when specifying the Auto Drawer Selection setting. (See “Auto Paper Selection/Auto Drawer Switching,” on p. 3-11.)
- Paper loaded on the stack bypass must meet the following requirements:
  - Paper Quantity: one to approximately 80 sheets (80 g/m^2, stacked approximately 5 mm high)
  - Paper Size: 95 mm × 148 mm to 297 mm × 432 mm
  - Paper Weight: 64 g/m^2 to 128 g/m^2
- Rolled or curled paper must be straightened out prior to use, to allow the paper to feed smoothly through the stack bypass (allowable curl amount: less than 10 mm for normal paper, less than 5 mm for heavyweight paper).
- If the paper has absorbed moisture while in storage in a humid environment, it may not be possible to feed the paper into the stack bypass. In this case, set the amount of paper to fewer than 40 sheets (80 g/m^2).
- Do not load different size/type paper at the same time.
- Feed label sheets one sheet at a time, and remove each sheet as it is delivered to the output tray. Loading several label sheets together may cause paper jams.
- Loading multiple sheets of heavyweight paper into the stack bypass may cause a paper jam, depending on the type of heavyweight paper you want to use. Load only one sheet at a time.
- When printing on special types of paper, such as heavyweight paper or transparencies, be sure to set the correct paper type, especially if you are using heavyweight paper. If the type of paper is not set correctly, it could adversely affect the quality of the image. Moreover, the fixing unit may become dirty and require a service repair, or the paper could jam.
- If you are printing on envelopes, do not allow more than 10 envelopes to accumulate in the output tray. Always empty the output tray once 10 envelopes have accumulated.

NOTE

- Envelopes may become creased in the printing process.
- For high-quality printouts, use paper recommended by Canon.
- For more information on paper types that can be used with this machine, see “Available Paper Stock,” on p. 8-17.

■ Standard Size

You can select ISO paper sizes (such as A4 and B5) or North American paper sizes (such as LTR and LGL).

■ Free Size

You can load nonstandard paper sizes ranged from 95 mm × 148 mm to 297 mm × 432 mm.

■ Envelope

The following envelopes can be loaded into the stack bypass:

- COM10 (#10): 104.7 mm × 241.3 mm
- Monarch: 98.4 mm × 190.5 mm
- DL: 110 mm × 220 mm
- ISO-C5: 162 mm × 229 mm
- ISO-B5: 176 mm × 250 mm

For more information on specific envelope types, see “Available Paper Stock,” on p. 8-17.

1

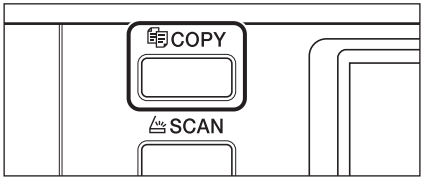

Press COPY.

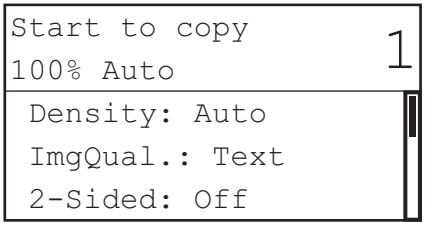

The Standby display appears for the Copy function.

2

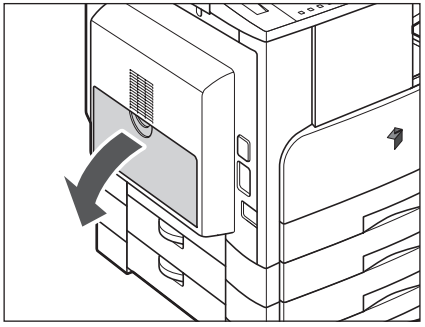

Open the stack bypass.

NOTE

If the paper size/type you are going to load into the stack bypass is different from the paper size/type stored in <Stand. Stack Bypass> (Standard Stack Bypass settings), set <Stand. Stack Bypass> to ‘Off’ in Common Settings (from the Additional Functions menu). (See “Standard Paper for the Stack Bypass,” on p. 3-17.)

3

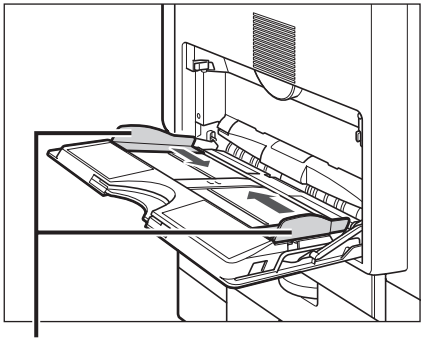

Slide Guides

Adjust the slide guides to match the size of the paper.

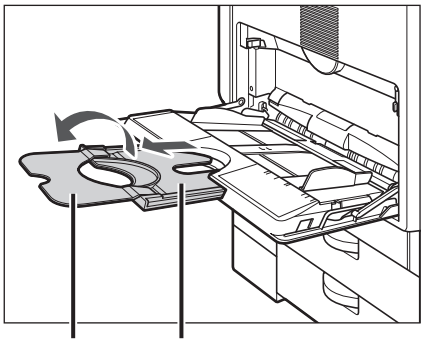

Tray Extension **Auxiliary Tray**

If you are feeding large size paper, pull out the auxiliary tray, and extend the tray extension.

4

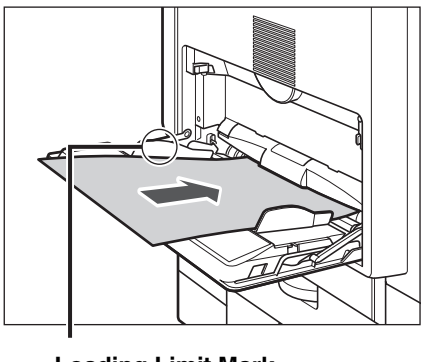

Loading Limit Mark

Load the paper into the stack bypass.

When the paper is loaded into the stack bypass, the side facing down is the one printed on.

Make sure that the height of the paper stack does not exceed the loading limit mark (▽).

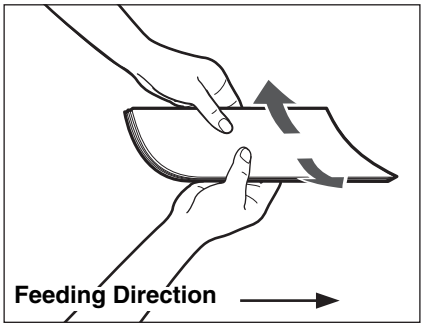

When you use the stack bypass to make copies, straighten out curled paper prior to use. Curled paper may cause a paper jam.

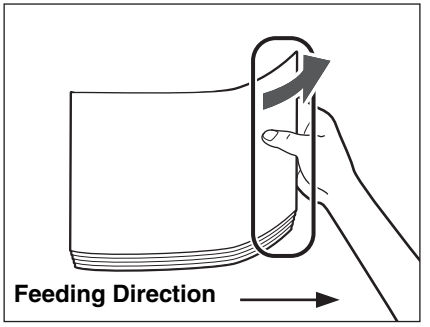

If there is difficulty in straightening out curled paper, curl the front edges of the paper upward.

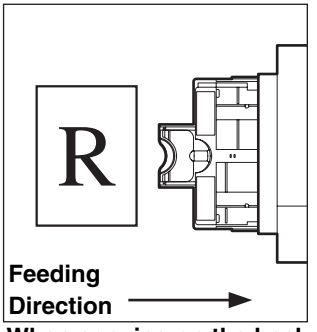

When copying on the back side of a preprinted sheet.

To print on the back side of preprinted paper, load the preprinted paper face up into the stack bypass.

IMPORTANT

- When loading paper into the stack bypass, align the paper stack neatly between the slide guides. If the paper is not loaded correctly, a paper jam may occur.
- If you are printing on heavyweight paper or envelopes using the stack bypass, remove the paper or envelopes, curl their feeding edges upward approximately 3 mm, and then reload the paper or envelopes. Curling the feeding edges enables the rollers to grip the paper or envelopes as they are fed into the stack bypass.

NOTE

- If there are instructions on the paper package about which side of the paper to load, follow those instructions.
- If problems, such as poor print quality or paper jams, occur, try turning the paper stack over and reload it.

● If you are loading envelopes into the stack bypass:

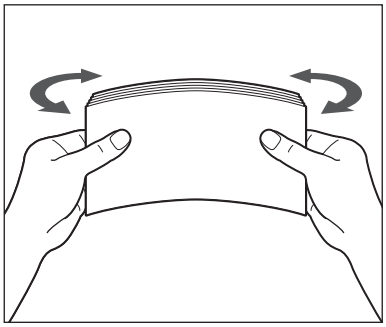

❑ Take five envelopes, loosen them as shown, and then stack them together. Repeat this step five times for each set of five envelopes.

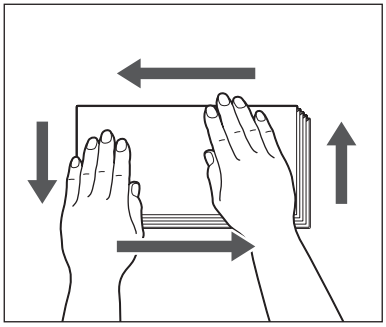

❑ Place the envelopes on a clean, level surface, and press all the way around the envelopes by hand, in the direction of the arrows, to remove any curls. Repeat this step five times for each set of five envelopes.

IMPORTANT

Take particular care to spread the envelopes out in the direction that they will be fed.

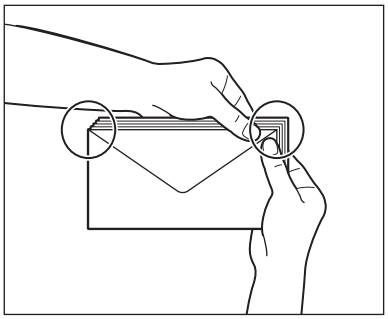

❑ Hold down the four corners of the envelopes firmly, so that they and the sealed or glued portion stay flat.

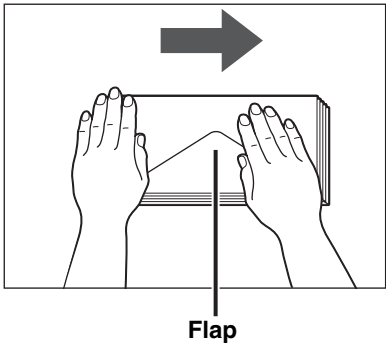

NOTE

If the envelopes become filled with air, flatten them by hand before loading them into the stack bypass.

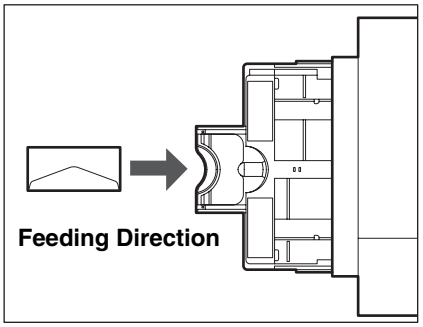

When Printing on the Front Side of the Envelopes

❑ Load the envelopes, as illustrated on the left.

IMPORTANT

- The stack bypass can hold 10 envelopes at a time.
- Do not print on the back side of the envelopes (the side with the flap).
- Envelopes may become creased in the printing process.

5 Select the desired paper size.

NOTE

If <Stand. Stack Bypass> is set to 'On', the preset paper size and type for the stack bypass will be selected. In this case, you do not need to specify the paper size or type. Proceed to step 7.

● **If you want to select a standard paper size or an envelope type:**



❑ Use [▼] or [▲] to select the desired paper size or envelope type → press [OK].

● **If you want to select a nonstandard paper size:**

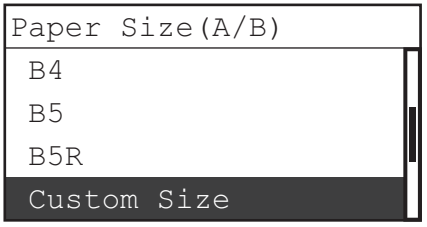

❑ Use [▼] or [▲] to select <Custom Size> → press [OK].

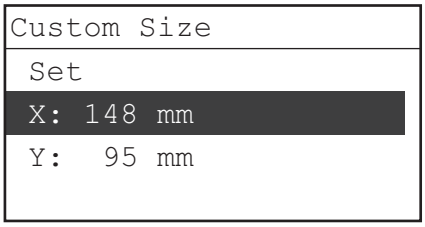

❑ Use [▼] or [▲] to select <X:> → press [OK].

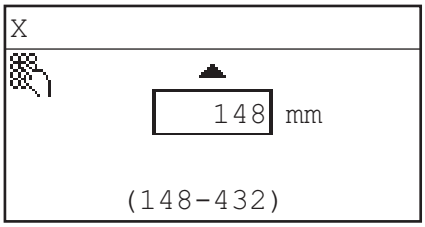

❑ Enter the horizontal size of the paper using [▼] or [▲], or ⓪ - ⑨ (numeric keys) → press [OK].

The horizontal size can be set from 148 mm to 432 mm.



❑ Use [▼] or [▲] to select <Y:> → press [OK].

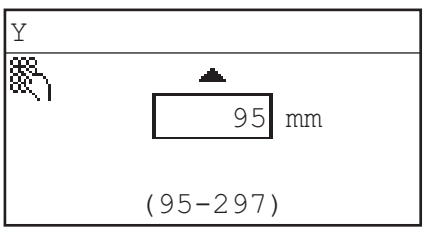

❑ Enter the vertical size of the paper using [▼] or [▲], or ⓪ - ⑨ (numeric keys) → press [OK].

The vertical size can be set from 95 mm to 297 mm.

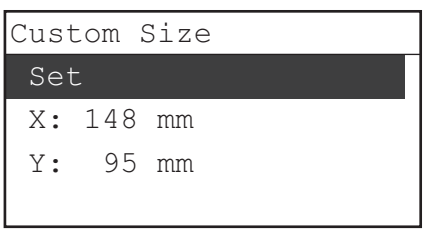

❑ Use [▼] or [▲] to select <Set> → press [OK].

6

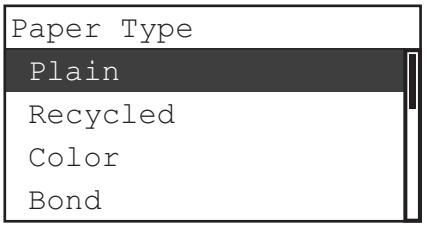

Use [▼] or [▲] to select the desired paper type → press [OK].

If you have selected COM10 (#10), Monarch, DL, ISO-C5, or ISO-B5 for the envelope type, the screen on the left will not appear. Proceed to step 7.

IMPORTANT

When printing on special types of paper, such as heavyweight paper or transparencies, be sure to set the correct paper type, especially if you are using heavyweight paper. If the paper type is not set correctly, it could adversely affect the quality of the image. Moreover, the fixing unit may become dirty and require a service repair, or the paper could jam.

NOTE

- <Transparency> can be selected only if <A4> is selected as the paper size.
- If you select <Transparency> or <Labels>, you cannot use the Staple, Rotate + Collate, or Offset + Collate mode.
- If a paper type other than <Plain> is selected, the icon of the selected paper source is marked with an asterisk (*).
- For more information on paper types, see “Available Paper Stock,” on p. 8-17.

7

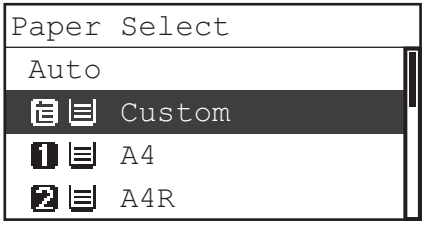

Use [▼] or [▲] to select the stack bypass as the paper source → press [OK].

The available paper sources can be identified with the following icons:

: Stack Bypass

: Drawer 1

: Drawer 2

: Drawer 3

: Drawer 4

NOTE

If the Paper Select menu does not appear, press (Paper Select) to display the menu.

8 Place your originals and start copying.

See steps 3 to 8 in “Basic Copying,” on p. 2-20.

NOTE

To cancel all settings and return the machine to the Standby display, press (Reset).

Basic Printing

This section describes the flow of basic printing operations.

NOTE

- For instructions on turning ON the machine, see “Main Power and Control Panel Power,” on p. 1-14.
- To print from a computer, you must set the machine configurations, and install the printer driver in the computer. For instructions on setting the machine configurations, see Chapter 1, “Before You Start Using This Machine,” in the *User’s Guide*. For instructions on installing the printer driver, see the *Printer Driver Installation Guide* or *Mac UFR II Printer Driver Installation Guide*.
- The 2-Sided Printing mode is available only when the optional Duplex Unit-A1 is attached.
- To perform 2-Sided Printing from a computer that is connected to the machine with a USB cable, you must enable the optional Duplex Unit-A1 from the printer driver. For help, see Chapter 1, “Using the Machine as a Printer,” in the *UFR II Printer Guide*.
- You can select the default printer settings on the machine from the Additional Functions menu. For details, see Chapter 1, “Using the Machine as a Printer,” in the *UFR II Printer Guide*.

1 On the computer desktop, open the document that you want to print from the application.

2 Click the [File] menu → select [Print].

The [Print] dialog box appears.

NOTE

The procedure for displaying the [Print] dialog box may vary, depending on the application used.

3 On the [Print] dialog box, select your printer from [Name] → specify the print settings that suit your preferences.

For help, see the *Windows Printer Driver Guide*, *Mac Printer Driver Guide*, or the help on the printer driver.

4 Click [OK] to start printing.

Printing starts.

Basic Remote Scanning

Remote Scanning is a scanning method in which scans are loaded to a TWAIN-compliant application (such as Adobe Photoshop, Adobe Acrobat, and Microsoft Word/Excel/PowerPoint 2000 or later) on your computer desktop. This section describes the flow of basic remote scanning operations.

IMPORTANT

- If you want to use the machine as a network scanner, it must be connected to a computer over an IPv4 network.
- Color Network ScanGear, the application software for remote scanning, is compatible with the Windows operating systems only. For more information, see the *Network ScanGear Guide*.
- A TWAIN-compliant application is required to perform remote scanning.
- Before remotely scanning your originals, you must set the machine configurations, and install the scanner driver in the computer. For more information, see Chapter 1, "Before You Start Using This Machine," in the *User's Guide*.

NOTE

- For instructions on turning ON the machine, see "Main Power and Control Panel Power," on p. 1-14.
- The quality of scans may deteriorate if the platen glass is dirty. Always keep the platen glass clean.
- Do not touch the optional feeder or platen cover while scanning. Rocking the feeder or platen cover may distort the image being scanned.
- For more information on the Remote Scan function, see the *Network ScanGear Guide*.

1 Press the appropriate keys in accordance with the messages displayed on the LCD display.

If there are no messages displayed, proceed to step 2.

● **If the message <Dept. ID/Pass Input> appears:**

❑ Enter the Department ID and password.

For help, see step 1 of "Basic Copying," on p. 2-20.

● **If the message <Enter User ID/Pass> appears:**

❑ Enter your User ID and password.

For help, see step 1 of "Basic Copying," on p. 2-20.

2

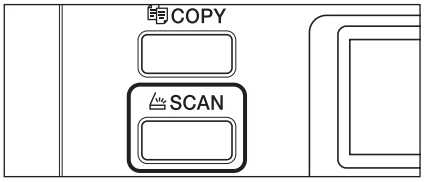

Press SCAN.

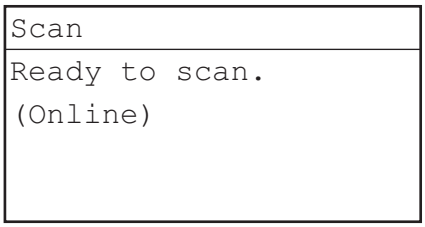

The Standby display appears for the Scan function.

3 Place your originals.

NOTE

For help, see “Placing Originals,” on p. 2-14.

4 If you are scanning for the first time after the driver installation, select the Color Network ScanGear as the scanner to be used.

5 Open a TWAIN-compliant application on your computer desktop.

6 Select the command to start scanning operation (such as [Scan New] or [Acquire]).

The Color Network ScanGear Main Window appears.

NOTE

For help, see the documentation provided with your application.

7 Specify the scan settings that suit your preferences.

NOTE

For help, see the *Network ScanGear Guide*.

8 Click [Scan].

Scanning starts.

When scanning is complete, the Color Network ScanGear Main Window closes, and the scanned image is transferred to the application.

IMPORTANT

- After clicking [Scan], do not perform any operation in the Color Network ScanGear Main Window until the dialog box showing the scanning progress appears.
- If Color Network ScanGear does not automatically close after scanning, click [×] (Exit) to close it.
- Be sure to close the Color Network ScanGear Main Window before exiting the application.

9 When scanning is complete, remove your originals.

10 If Department ID Management or User ID Management is set, press ID (ID).

NOTE

- For instructions on using Department ID Management, see “Department ID Management,” on p. 4-8.
- For instructions on using User ID Management, see Chapter 3, “Customizing Settings,” in the *Remote UI Guide*.

Checking Job Status and Log

When you press the System Monitor key, the System Monitor screen appears. You can check the status and log of copy and print jobs from this display.

NOTE

You can also check the device status for the machine maintenance, and the network information from the System Monitor screen. For more information on the machine maintenance, see “Routine Maintenance,” on p. 6-1.

1 Press (System Monitor).

The System Monitor screen appears on the LCD display.

2

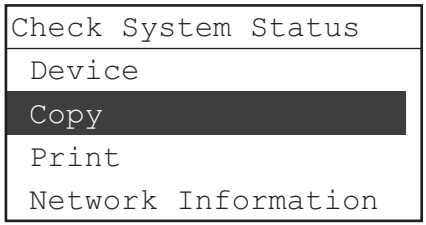

Use [▼] or [▲] to select <Copy> or <Print> → press [OK].

If you select <Copy>, the Copy Status/Log screen appears.

If you select <Print>, the Print Status/Log screen appears.

NOTE

- You can also select <Device> or <Network Information>.
- If you select <Device> → <Available Memory>, you can check the percentage of memory that is currently available.

3

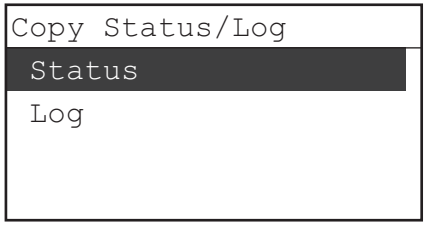

Use [▼] or [▲] to select <Status> or <Log> → press [OK].

If you select <Status>, the Status screen appears.

If you select <Log>, the Log screen appears.

4

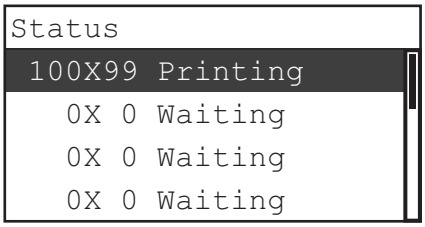

Use [▼] or [▲] to select the job whose status or log you want to view → press [OK].

If there is only one job, just press [OK].

The Job Status Details or Job Log Details screen appears.

NOTE

- The current, or most recently performed job is listed first on the screen.
- The LCD display can display characters in ASCII code. Using other character codes may cause characters garbled on the LCD display.
- The messages displayed on the Status screen are as follows:
  - <Printing> = Current job
  - <Paused> = Current job that has been temporarily stopped by pressing (Stop).
  - <Waiting> = Reserved jobs
- The messages displayed on the Log screen are as follows:
  - <OK> = Job performed successfully
  - <NG> = Job performed unsuccessfully

5

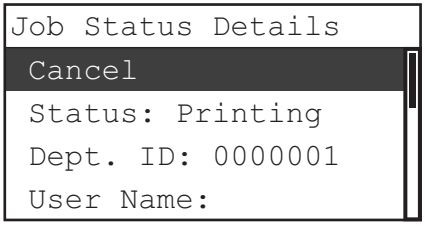

Use [▼] or [▲] to scroll through the status or log of the selected job.

If you want a complete view of each item, select the item you want to check → press [OK]. To return to the Job Status Details or Job Log Details screen, press [OK] again.

Available information on each screen is as follows:

<Job Status Details>

- For Copy Jobs: <Status>, <Dept. ID>, <User Name>, <Originals>, <SheetXCopy>, <Copy Ratio>, and <Size>
- For Print Jobs: <Status>, <Dept. ID>, <Type>, <Doc. Name>, <User Name>, <RX Size>, <Rasterized Pages>, and <Sheets>

<Job Log Details>

- For Copy Jobs: <Result>, <Dept. ID>, <User Name>, <Originals>, <Original Pages>, <Print Pages>, and <SheetXCopy>
- For Print Jobs: <Result>, <Dept. ID>, <Type>, <Doc. Name>, <User Name>, <Original Pages>, <Print Pages>, and <SheetXCopy>

6 **Press (Reset) to return to the Standby display.**

Canceling a Job

There are several ways to cancel a job. This section describes how to cancel a job using the Stop key and using the System Monitor screen.

NOTE

Several copies/prints may be output even after you canceled a job.

Using the Stop Key

You can cancel a copy, print, or remote scan job using the Stop key.

1 Press (Stop).

- **If the machine is handling only one job:**
  - ❑ Proceed to step 4.
- **If the machine has multiple copy or print jobs:**
  - ❑ Proceed to step 2.

2

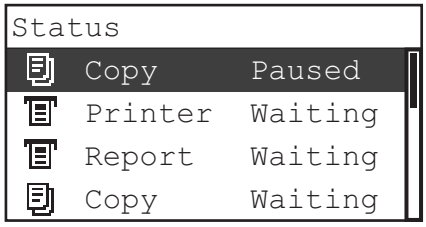

Use [▼] or [▲] to select the job you want to cancel → press [OK].

NOTE

- The current job is listed first on the Status screen.
- The LCD display can display characters in ASCII code. Using other character codes may cause characters garbled on the LCD display.
- The messages displayed on the Status screen are as follows:
  - <Printing> = Current job
  - <Paused> = Current job that has been temporarily stopped by pressing (Stop).
  - <Waiting> = Reserved jobs

3

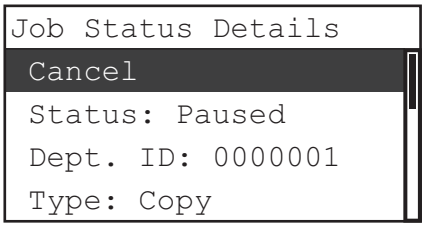

Use [▼] or [▲] to select <Cancel> → press [OK].

The Cancel screen appears.

4



Use [◀] or [▶] to select <Yes> → press [OK].

The job is canceled.

NOTE

- If you do not want to cancel the job, press [◀] or [▶] to select <No> → press [OK].
- Pressing (Stop) while the machine is scanning an original placed in the optional feeder may cause a paper jam. For instructions on clearing paper jams in the optional feeder, see “Feeder (DADF-P2) (Optional),” on p. 7-19.
- You cannot select multiple jobs and cancel them all at once. Select and cancel one job at a time.

Using the System Monitor Screen

You can cancel a copy or print job from the System Monitor screen during printing or while it is waiting to be processed.

1 **Press (System Monitor).**

The System Monitor screen appears on the LCD display.

2

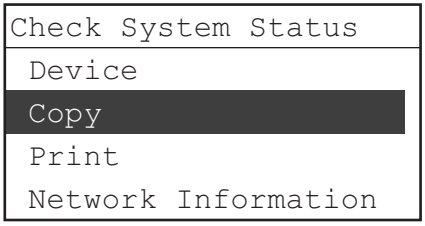

Use [▼] or [▲] to select <Copy> or <Print> → press [OK].

If you select <Copy>, the Copy Status/Log screen appears.

If you select <Print>, the Print Status/Log screen appears.

3

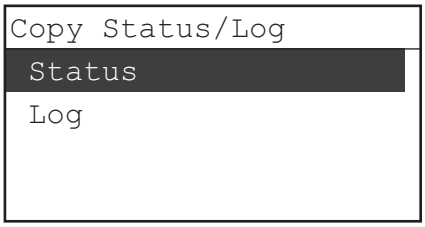

Use [▼] or [▲] to select <Status> → press [OK].

The Status screen appears.

4

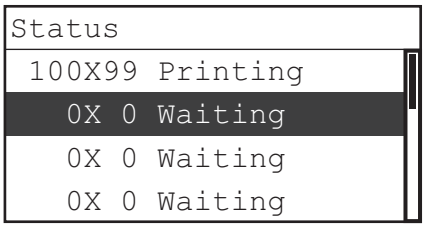

Use [▼] or [▲] to select the job you want to cancel → press [OK].

If there is only one job, just press [OK].

The Job Status Details screen appears.

NOTE

- The current job is listed first on the Status screen.
- The LCD display can display characters in ASCII code. Using other character codes may cause characters garbled on the LCD display.
- The messages displayed on the Status screen are as follows:
  - <Printing> = Current job
  - <Paused> = Current job that has been temporarily stopped by pressing (Stop).
  - <Waiting> = Reserved jobs

5

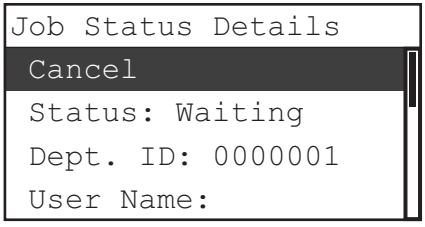

Use [▼] or [▲] to select <Cancel> → press [OK].

The Cancel screen appears.

6



Use [◀] or [▶] to select <Yes> → press [OK].

If you do not want to cancel the job, select <No> to return to the previous display.

The selected job is canceled.

Repeat steps 4 and 6 to cancel another job.

NOTE

- You cannot select multiple jobs and cancel them all at once. Select and cancel one job at a time.
- The LCD display can display characters in ASCII code. Using other character codes may cause characters garbled on the LCD display.

7 **Press [//] (Reset) to return to the Standby display.**

Useful Functions and Settings

3

CHAPTER

This chapter explains how to change the machine's Common Settings and Timer Settings, customize them to suit your needs, and how to print reports.

What Are Additional Functions? 3-2
Tone Settings 3-3
Specifying Common Settings 3-5
- Initial Function at Power ON 3-5
- Adjusting the LCD Display Contrast 3-6
- Inverting the LCD Display Colors 3-7
- Default Display after Auto Clear 3-8
- Setting the Toner Save Mode 3-9
- Adjusting the Print Density 3-10
- Auto Paper Selection/Auto Drawer Switching 3-11
- Identifying the Type of Paper in a Paper Source 3-13
- Output Tray Designation 3-15
- Standard Paper for the Stack Bypass 3-17
- Setting the Speed or Print Side Priority 3-20
- Changing the Language on the LCD Display 3-22
- Displaying a Feeder Error Message Prompt 3-23
- Data Compression Ratio for Remote Scans 3-24
- Setting the Gamma Value for Remote Scans 3-26
- Switching between Inch and Millimeter 3-27
- Selecting the Paper Size Group 3-28
- Returning the Common Settings to Their Defaults 3-29

Timer Settings 3-30
- Auto Sleep Time 3-30
- Auto Clear Time 3-31
- Auto Shutdown Time 3-33

Adjusting the Machine 3-35
- Setting the Fixing Mode for Bond Paper 3-35
- Improving Print Quality and Density 3-36
- Preventing Paper Curl or Jams Caused by a High-humidity Environment 3-37
- Preventing Paper Jams when Printing on the Back Side of Printed Paper 3-38
- Preventing Paper Curl Due to Paper Type 3-40
- Reducing Wait Time for the Next Job 3-41
- Adjusting Output Speed in the Rotate + Collate Mode 3-42
- Feeder Smudge Adjustment 3-43

Printing the User's Data List 3-44

What Are Additional Functions?

When you press (Additional Functions), the Additional Functions menu appears. The Additional Functions menu enables you to change and customize the machine's various settings. When these settings are changed or specified, they are saved as the default settings and continue to apply until they are changed again. The following settings are available for change:

- Audible Tones
  See "Tone Settings," on p. 3-3.
- Common Settings
  See "Specifying Common Settings," on p. 3-5.
- Copy Settings
  See Chapter 3, "Customizing Settings," in the *Copying Guide*.
- Printer Settings
  See Chapter 1, "Using the Machine as a Printer," in the *UFR II Printer Guide*.
- Timer Settings
  See "Timer Settings," on p. 3-30.
- Adjustment/Cleaning
  See "Adjusting the Machine," on p. 3-35.
- Report Settings
  See "Printing the User's Data List," on p. 3-44.
- System Settings
  See Chapter 4, "System Manager Settings."

NOTE

Some functions and settings can be used or displayed only when optional equipment is attached. For more information on the optional equipment, see Chapter 5, "Optional Equipment."

Tone Settings

You can set whether or not to sound audible tones. The settings for the following tones are available:

- Entry Tone: sounds when a key is pressed on the control panel.
- Error Tone: sounds when a malfunction occurs (e.g., a paper jam or operational error).
- Scan Done Tone: sounds when scanning is complete.
- Print Done Tone: sounds when printing is complete.

NOTE

The default setting is 'On' for the Entry Tone and Error Tone, and 'For Error Only' for the Scan Done Tone and Print Done Tone.

1 **Press (Additional Functions).**

The Additional Functions menu appears.

2

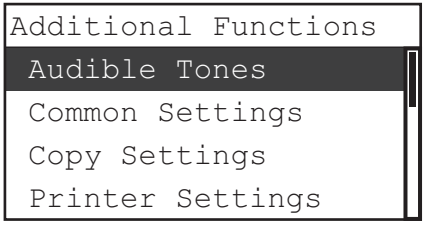

Use [▼] or [▲] to select <Audible Tones> → press [OK].

The Audible Tones menu appears.

3



Use [▼] or [▲] to select <Entry Tone>, <Error Tone>, <Scan Done Tone>, or <Print Done Tone> → press [OK].

4

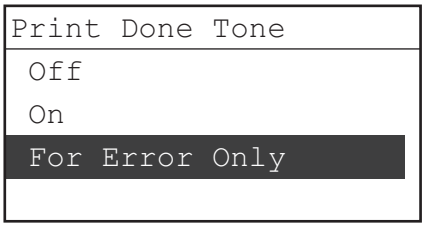

Use [▼] or [▲] to select <Off>, <On>, or <For Error Only> for the tone you are setting → press [OK].

NOTE

<For Error Only> is selectable only for the Scan Done Tone and Print Done Tone settings.

Repeat steps 3 and 4 to set the other tones.

The selected mode is set.

5 **Press (Reset) to return to the Standby display.**

Specifying Common Settings

You can specify the settings that are common to the Copy and Printer functions.

NOTE

The Common Settings menu consists of several items. Use [▼] or [▲] to scroll to the items you want to set.

Initial Function at Power ON

You can specify the screen that is displayed when you turn ON the main power, or after the Auto Clear mode initiates.

NOTE

The default setting is 'Copy'.

1 **Press (Additional Functions).**

The Additional Functions menu appears.

2

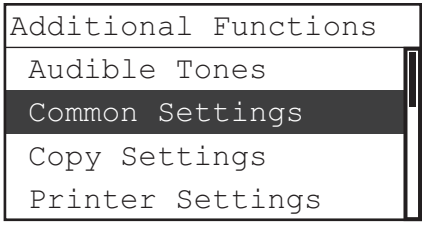

Use [▼] or [▲] to select <Common Settings> → press [OK].

The Common Settings menu appears.

3

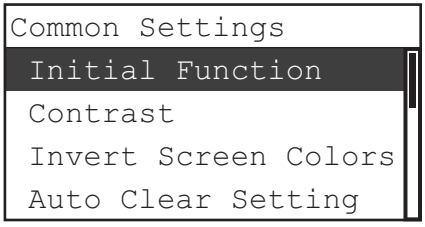

Use [▼] or [▲] to select <Initial Function> → press [OK].

The Initial Function menu appears.

4

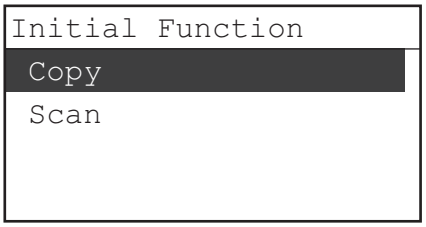

Use [▼] or [▲] to select <Copy>, or <Scan> → press [OK].

Select <Copy> to set the machine to the Copy function when the power is turned ON.

Select <Scan> to set the machine to the Network Scan function when the power is turned ON.

IMPORTANT

<Scan> is selectable only when the optional Network Kit is attached.

The selected mode is set.

5 **Press (Reset) to return to the Standby display.**

Adjusting the LCD Display Contrast

If you want to change the contrast of the LCD display, follow the procedure below.

NOTE

The default setting is in the middle, '±0', on a scale of '-2' to '+2'.

1 **Press (Additional Functions) → use [▼] or [▲] to select <Common Settings> → press [OK].**

For help, see the screen shots in step 2 of "Initial Function at Power ON," on p. 3-5.

The Common Settings menu appears.

2

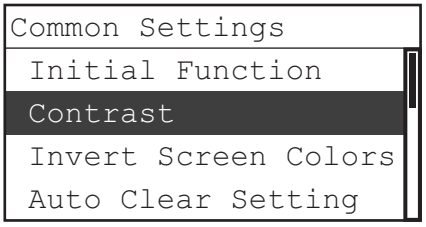

Use [▼] or [▲] to select <Contrast> → press [OK].

The Contrast menu appears.

3

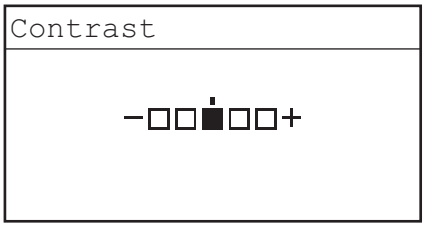

Use [◀] or [▶] to adjust the contrast from light (-) to dark (+) → press [OK].

The selected mode is set.

4 **Press (Reset) to return to the Standby display.**

Inverting the LCD Display Colors

The Invert Screen Colors setting enables you to reverse the light and dark areas on the LCD display. This setting is useful when you find it hard to read what is shown on the display.

NOTE

The default setting is 'Off'.

1 **Press (Additional Functions) → use [▼] or [▲] to select <Common Settings> → press [OK].**

For help, see the screen shots in step 2 of "Initial Function at Power ON," on p. 3-5.

The Common Settings menu appears.

2

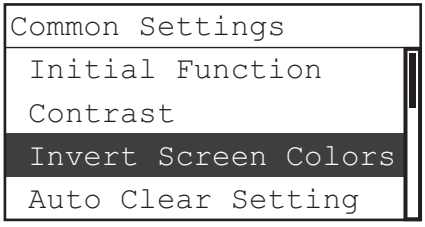

Use [▼] or [▲] to select <Invert Screen Colors> → press [OK].

The Invert Screen Colors menu appears.

3

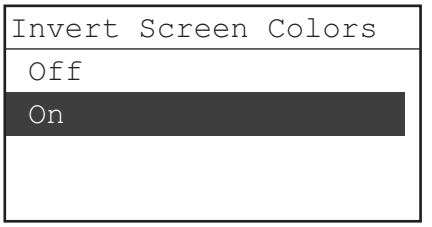

Use [▼] or [▲] to select <Off> or <On> → press [OK].

The selected mode is set.

4 **Press (Reset) to return to the Standby display.**

Default Display after Auto Clear

You can set whether the screen specified as the Initial Function is displayed after the Auto Clear mode initiates.

NOTE

- The time necessary for the Auto Clear mode to initiate can be set. (See "Auto Clear Time," on p. 3-31.)
- The default setting is 'Initial Function'.

1 **Press (Additional Functions) → use [▼] or [▲] to select <Common Settings> → press [OK].**

For help, see the screen shots in step 2 of "Initial Function at Power ON," on p. 3-5.

The Common Settings menu appears.

2

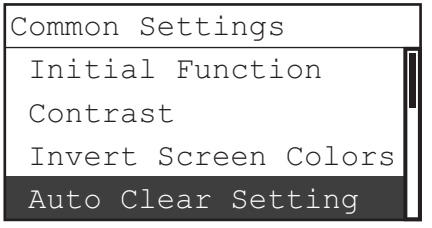

Use [▼] or [▲] to select <Auto Clear Setting> → press [OK].

The Auto Clear Setting menu appears.

3 **Use [▼] or [▲] to select <Initial Function> or <Selected Function> → press [OK].**

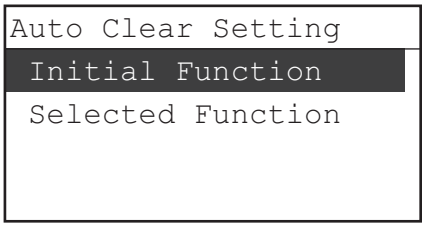

Details of each option are as follows:

<Initial Function>
The function specified as the initial function is displayed after the Auto Clear mode initiates. For example, if you set the Scan function as the initial function, and the Auto Clear mode initiates while a settings screen for the Copy function is shown, the display returns to the initial Scan menu.

<Selected Function>
The display returns to the main menu of the function that was displayed before the Auto Clear mode is activated. For example, if you set the Copy function as the initial function, and the Auto Clear mode initiates while a settings screen for the Scan function is shown, the display returns to the initial Scan menu.

The selected mode is set.

4 **Press (Reset) to return to the Standby display.**

Setting the Toner Save Mode

Setting the Toner Save Mode enables you to select the level of toner consumption for printing. Use this setting if you want to save toner and expect a prolonged life of the toner cartridge.

NOTE

- If the Toner Save Mode is set to 'High', print quality may be affected. If you notice a degradation in print quality, set this mode to 'Off'.
- The default setting is 'Off'.

1 **Press (Additional Functions) → use [▼] or [▲] to select <Common Settings> → press [OK].**

For help, see the screen shots in step 2 of "Initial Function at Power ON," on p. 3-5.

The Common Settings menu appears.

2

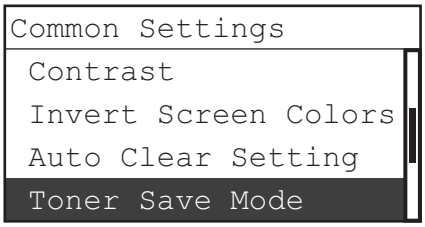

Use [▼] or [▲] to select <Toner Save Mode> → press [OK].

The Toner Save Mode menu appears.

3

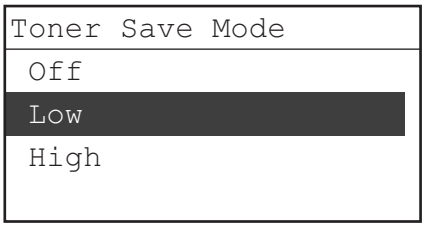

Use [▼] or [▲] to select <Off>, <Low>, or <High> → press [OK].

The selected mode is set.

4 **Press [ ] (Reset) to return to the Standby display.**

Adjusting the Print Density

You can adjust the density scale if differences occur between the image on the original and the print.

NOTE

The default setting is in the middle, '±0', on a scale of '-4' to '+4'.

1 **Press [ ] (Additional Functions) → use [▼] or [▲] to select <Common Settings> → press [OK].**

For help, see the screen shots in step 2 of "Initial Function at Power ON," on p. 3-5.

The Common Settings menu appears.

2

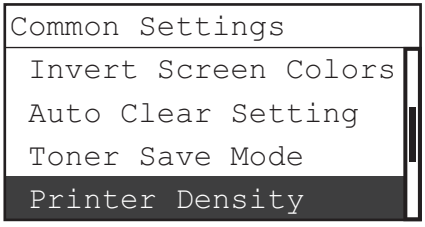

Use [▼] or [▲] to select <Printer Density> → press [OK].

The Printer Density menu appears.

3 Printer Density



Use [◀] or [▶] to adjust the density from light (-) to dark (+) → press [OK].

The selected mode is set.

4 **Press (Reset) to return to the Standby display.**

Auto Paper Selection/Auto Drawer Switching

The machine's Automatic Paper Selection (APS) and Automatic Drawer Switching (ADS) functions enable you to specify which paper source(s) can be used for a specific purpose. This setting can be made independently for all functions of the machine (such as Copy and Print), and is especially useful when you want to use different paper sources for different purposes.

NOTE

- The following functions are applied to paper sources that are set to 'On':
  - APS: The machine automatically selects the appropriate paper size (paper source) based on the original's size and copy ratio settings (when making a copy).
  - ADS: If a paper source runs out of paper during a continuous print job, the machine automatically selects another paper source loaded with the same size paper, and begins feeding paper from that paper source.
- The default settings are 'Off' for the stack bypass, and 'On' for the other paper sources.

1 **Press (Additional Functions) → use [▼] or [▲] to select <Common Settings> → press [OK].**

For help, see the screen shots in step 2 of "Initial Function at Power ON," on p. 3-5.

The Common Settings menu appears.

2 Common Settings
Auto Clear Setting
Toner Save Mode
Printer Density
Auto Drawer Select

Use [▼] or [▲] to select <Auto Drawer Select> → press [OK].

The Auto Drawer Select menu appears.

3

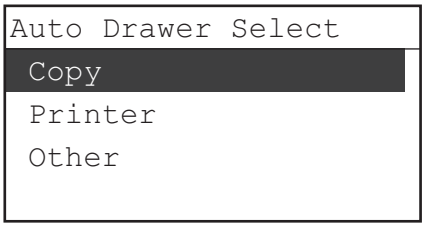

Use [▼] or [▲] to select <Copy>, <Printer>, or <Other> → press [OK].

NOTE

<Other> is used for specifying the paper source for printing the User's Data List.

4

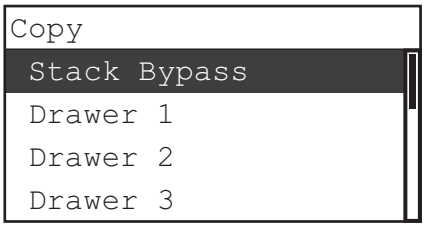

Use [▼] or [▲] to select <Stack Bypass> or the desired paper drawer → press [OK].

5

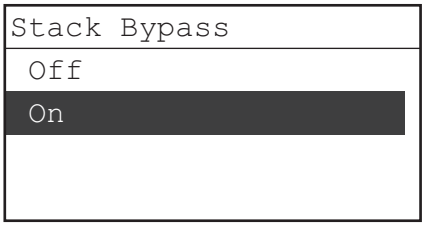

Use [▼] or [▲] to select <Off> or <On> → press [OK].

Repeat steps 4 and 5 to make settings for the other paper sources.

Details of each item are as follows:

<On>
The paper source is eligible for APS/ADS.

<Off>
The paper source is ineligible for APS/ADS.

The selected mode is set.

NOTE

Regardless of the Stack Bypass setting, you cannot select <Off> for all of the paper sources at the same time. At least one of the paper sources, besides the stack bypass, must be set to <On>.

6 **Press [Reset] (Reset) to return to the Standby display.**

Identifying the Type of Paper in a Paper Source

This setting enables you to specify the paper type loaded in each paper drawer.

IMPORTANT

- Be sure to set the paper type correctly. If the type of paper is not set correctly, the setting could adversely affect the quality of the image. Moreover, the fixing unit may become dirty and require a service repair to avoid a paper jam.
- <Drawer 2> appears only if the optional Cassette Feeding Module-J1 or -K1 is attached. <Drawer 3> (as well as <Drawer 4>) appears only if the optional Cassette Feeding Module-K1 is attached.

NOTE

- For more information on paper types, see “Available Paper Stock,” on p. 8-17.
- The default setting is ‘Plain’ for all paper sources.

1 Press (Additional Functions) → use [▼] or [▲] to select <Common Settings> → press [OK].

For help, see the screen shots in step 2 of “Initial Function at Power ON,” on p. 3-5.

2 The Common Settings menu appears.

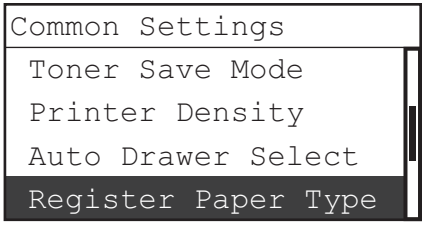

Use [▼] or [▲] to select <Register Paper Type> → press [OK].

The Register Paper Type menu appears.

3

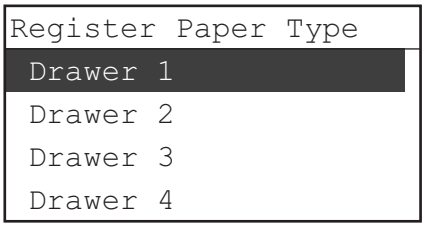

Use [▼] or [▲] to select the desired paper source from <Drawer 1>, <Drawer 2>, <Drawer 3>, and <Drawer 4> → press [OK].

The number of available paper sources may vary depending on the machine configurations.

Available paper types for the selected drawer are displayed.

4

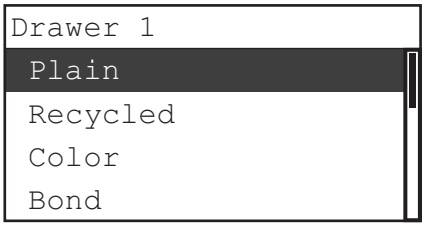

Use [▼] or [▲] to select <Plain>, <Recycled>, <Color>, <Bond>, or <Heavy Paper 1> → press [OK].

Make sure that the registered paper type setting is the same paper type that is loaded in the paper drawer.

Repeat steps 3 and 4 to set the paper type for the other drawers.

The selected mode is set.

NOTE

- If a paper type other than <Plain> is selected, the icon of the selected paper source is marked with an asterisk (*).
- For more information on paper types, see “Available Paper Stock,” on p. 8-17.

5 **Press (Reset) to return to the Standby display.**

Output Tray Designation

You can designate the machine's output trays to be used for specific functions. The output trays are indicated by Tray A and Tray B.

Options Attached	Functions	Tray A and B
Finisher-U2 and Additional Finisher Tray-C1	Tray A: Copy, Printer, and Other* Tray B: Copy, Printer, and Other*	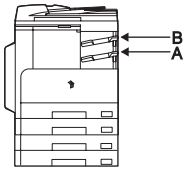
Inner 2 Way Tray-E2	Tray A: Copy, Printer, and Other* Tray B: Copy, Printer, and Other*	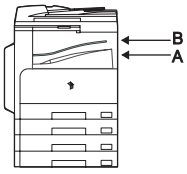

* The 'Other' function includes printing of reports, such as the User's Data List.

NOTE

- The Tray Designation mode is available only when the optional Finisher-U2 or Inner 2 Way Tray-E2 is attached to the machine.
- If heavyweight paper or transparencies are loaded in the stack bypass, they will be output to Tray B regardless of the Tray Designation settings. Plain paper, however, can be output to either Tray A or B.
- If you set both trays to 'On' for a single function, Tray A has the priority.
- The same output tray can be designated for multiple functions.
- The default setting is 'On' for all functions.

1 Press (Additional Functions) → use [▼] or [▲] to select <Common Settings> → press [OK].

For help, see the screen shots in step 2 of "Initial Function at Power ON," on p. 3-5.

The Common Settings menu appears.

2

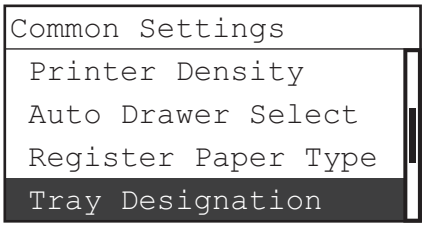

Use [▼] or [▲] to select <Tray Designation> → press [OK].

The Tray Designation menu appears.

3

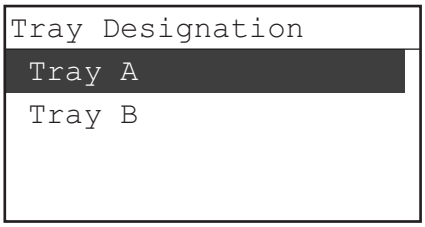

Use [▼] or [▲] to select <Tray A> or <Tray B> → press [OK].

4

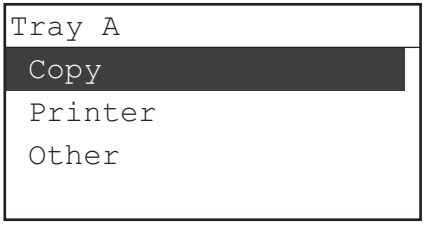

Use [▼] or [▲] to select the function for which to designate output trays A and B → press [OK].

You can select <Copy>, <Printer>, or <Other>.

NOTE

<Other> is used for specifying the report printing settings.

5

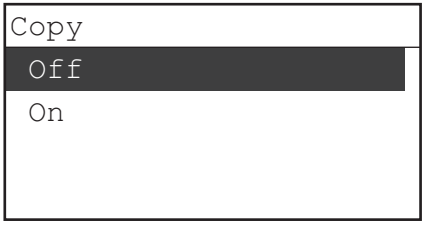

Use [▼] or [▲] to select <Off> or <On> → press [OK].

If you want to use an output tray exclusively for a specific function, select <On> only for that function.

Repeat steps 4 and 5 to set Tray Designation settings for the other functions.

The selected mode is set.

IMPORTANT

If a certain tray reaches its stacking limit, the machine automatically uses another tray that is designated for the same function.

6 **Press [⁄] (Reset) to return to the Standby display.**

Standard Paper for the Stack Bypass

You can set the paper size and type that the stack bypass uses beforehand. This setting is useful if you always load the same paper size and type into the stack bypass.

IMPORTANT

When printing on special types of paper, such as heavyweight paper or transparencies, make sure to correctly set the paper type, especially if you are using heavyweight paper. If the type of paper is not set correctly, it could adversely affect the quality of the image. Moreover, the fixing unit may become dirty and require a service repair to avoid a paper jam.

NOTE

- If you are going to use the stack bypass as a paper source for the Copy function, you must set the stack bypass to 'On' when specifying the Auto Drawer Selection setting. (See "Auto Paper Selection/Auto Drawer Switching," on p. 3-11.)
- The default setting is 'Off'.

---

1 **Press (Additional Functions) → use [▼] or [▲] to select <Common Settings> → press [OK].**

For help, see the screen shots in step 2 of "Initial Function at Power ON," on p. 3-5.

The Common Settings menu appears.

2

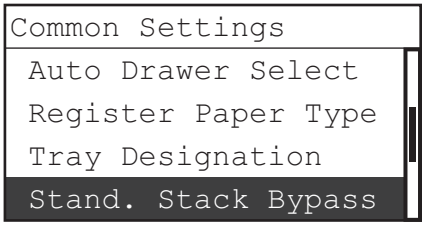

Use [▼] or [▲] to select <Stand. Stack Bypass> → press [OK].

The Stand. Stack Bypass menu appears.

3

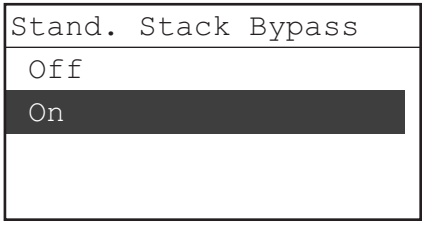

Use [▼] or [▲] to select <On> → press [OK].

If you select <Off>, proceed to step 8.

NOTE

Select <Off> if you want to specify the paper size/type every time paper is fed from the stack bypass. (See "Feeding Paper Using the Stack Bypass," on p. 2-25.)

4 Select the desired paper size.

● **If you want to select a standard paper size or envelope type:**



❑ Use [▼] or [▲] to select the desired paper size or envelope type → press [OK].

● **If you want to select a nonstandard paper size:**

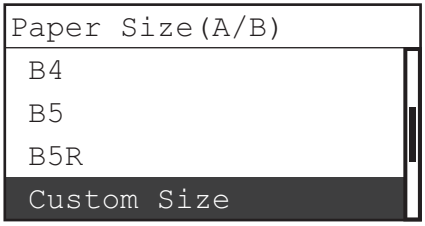

❑ Use [▼] or [▲] to select <Custom Size> → press [OK].

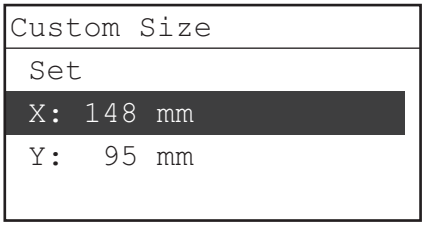

❑ Use [▼] or [▲] to select <X:> → press [OK].

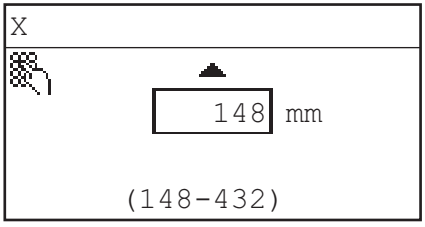

❑ Enter the horizontal size of the paper using [▼] or [▲], or ⓪ - ⑨ (numeric keys) → press [OK].

The horizontal size can be set from 148 mm to 432 mm.

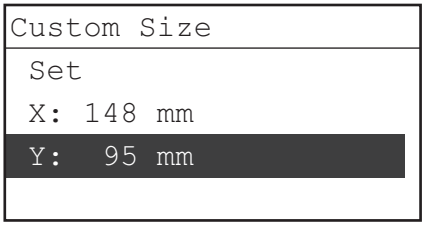

❑ Use [▼] or [▲] to select <Y:> → press [OK].

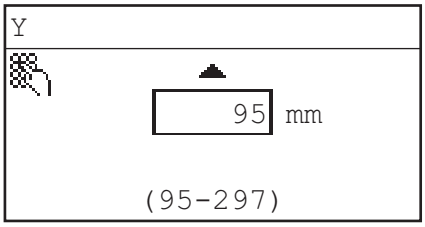

❑ Enter the vertical size of the paper using [▼] or [▲], or ⓪ - ⑨ (numeric keys) → press [OK].

The vertical size can be set from 95 mm to 297 mm.

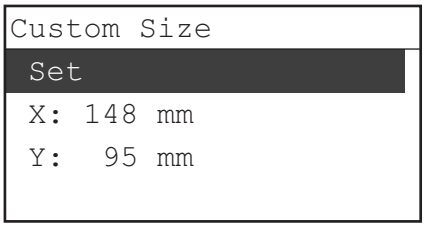

❑ Use [▼] or [▲] to select <Set> → press [OK].

5

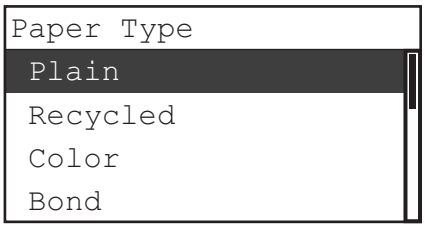

Use [▼] or [▲] to select the desired paper type → press [OK].

If you have selected COM10 (#10), Monarch, DL, ISO-C5, or ISO-B5 for the envelope type, the screen on the left will not appear.

The selected mode is set.

NOTE

- <Transparency> can be selected only if <A4> is selected as the paper size.
- If you select <Transparency> or <Labels>, you cannot use the Staple, Rotate + Collate, or Offset + Collate mode.
- If a paper type other than <Plain> is selected, the icon of the selected paper source is marked with an asterisk (*).
- For more information on paper types, see “Available Paper Stock,” on p. 8-17.

6 Press (Reset) to return to the Standby display.

Setting the Speed or Print Side Priority

You can set whether the printing speed is the priority for your job, or whether to print on a specific side of the paper. This setting is useful when you want to make one- or two-sided prints on preprinted paper (paper which has logos or patterns already printed on it) without changing the orientation of the paper loaded in a paper source.

NOTE

The default setting for all paper sources is 'Speed Priority'.

1 **Press (Additional Functions) → use [▼] or [▲] to select <Common Settings> → press [OK].**

For help, see the screen shots in step 2 of "Initial Function at Power ON," on p. 3-5.

The Common Settings menu appears.

2

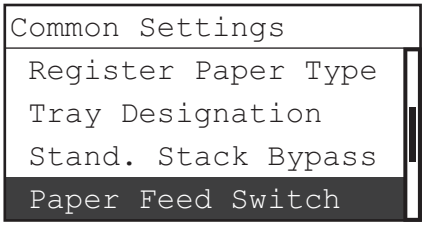

Use [▼] or [▲] to select <Paper Feed Switch> → press [OK].

The Paper Feed Switch menu appears.

3

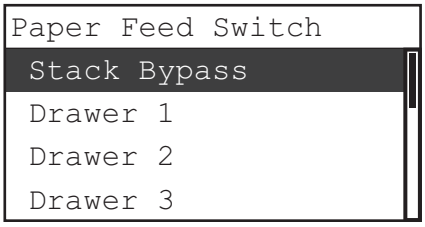

Use [▼] or [▲] to select <Stack Bypass> or the desired paper drawer → press [OK].

<Drawer 2> appears only if the optional Cassette Feeding Module-J1 or -K1 is attached.

<Drawer 3> (as well as <Drawer 4>) appears only if the optional Cassette Feeding Module-K1 is attached.

4 Use [▼] or [▲] to select <Speed Priority> or <Print Side> → press [OK].

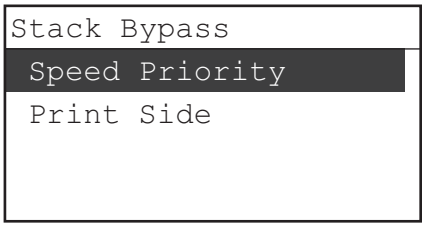

Details of each item are as follows:

<Speed Priority>
When you feed one- or two-sided prints into the machine, the method for delivering paper inside the machine changes, which affects the printing speed. To maximize the printing speed, load the paper manually as follows:

- One-Sided Print
  Load the paper face up into a paper drawer, or face down into the stack bypass. The side facing up in the paper drawer, and the side facing down in the stack bypass, are the sides printed on.
- Two-Sided Print
  Load the paper face down into a paper drawer, or face up into the stack bypass. The side facing down in the paper drawer, and the side facing up in the stack bypass, are the first sides that are printed on.

<Print Side>
If you load paper into the paper drawer and select <Print Side>, no matter whether you are printing one- or two-sided prints, the side of the paper facing down is always the one printed on first. (The side facing up is the one printed on first for the stack bypass.) However, some speed will be sacrificed when printing one-sided prints.

If <Print Side> is selected for a paper source, and <Auto Drawer Select> in Common Settings (from the Additional Functions menu) is set to 'On', the Auto Paper Selection (APS) and Auto Drawer Switching (ADS) functions are ignored. Printing may also become slower when you print one-sided documents.

The selected mode is set.

5 Press [⁄⁄] (Reset) to return to the Standby display.

Changing the Language on the LCD Display

You can select the language displayed on the LCD display.

1 **Press (Additional Functions) → use [▼] or [▲] to select <Common Settings> → press [OK].**

For help, see the screen shots in step 2 of "Initial Function at Power ON," on p. 3-5.

The Common Settings menu appears.

2

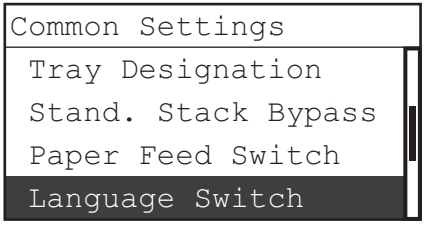

Use [▼] or [▲] to select <Language Switch> → press [OK].

The Language Switch menu appears.

3

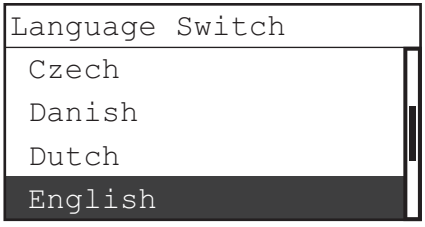

Use [▼] or [▲] to select the desired language → press [OK].

The selected mode is set.

IMPORTANT

Some messages may not be displayed properly in the language that you just selected. In this case, restart the machine—turn the machine OFF, and then back ON.

4 **Press (Reset) to return to the Standby display.**

Displaying a Feeder Error Message Prompt

If the feeder is not clean, the machine may scan and print dust and grime on the output. You can use this mode to prompt you to clean the scanning area when the machine detects streaks or stains.

NOTE

- This mode is available only if the optional Feeder (DADF-P2) is attached to the machine.
- The default setting is 'On'.

1 Press (Additional Functions) → use [▼] or [▲] to select <Common Settings> → press [OK].

For help, see the screen shots in step 2 of "Initial Function at Power ON," on p. 3-5.

The Common Settings menu appears.

2

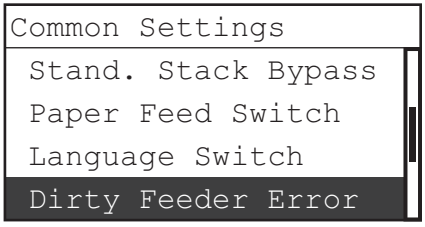

Use [▼] or [▲] to select <Dirty Feeder Error> → press [OK].

The Dirty Feeder Error menu appears.

3

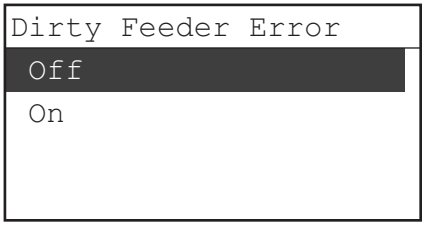

Use [▼] or [▲] to select <Off> or <On> → press [OK].

If you select <On>, the screen prompting you to clean the scanning area appears when the machine detects streaks or stains.

The selected mode is set.

4 Press (Reset) to return to the Standby display.

Data Compression Ratio for Remote Scans

You can set the compression ratio for network scanning. A high compression ratio reduces the amount of memory used for scanning the document, but results in a lower image quality. Conversely, a low compression ratio increases the amount of memory used for scanning the document, but results in a higher image quality.

NOTE

- For more information on the Network Scan function, see the *Network ScanGear Guide*.
- The default setting is 'Normal'.

1 **Press (Additional Functions) → use [▼] or [▲] to select <Common Settings> → press [OK].**

For help, see the screen shots in step 2 of "Initial Function at Power ON," on p. 3-5.

The Common Settings menu appears.

2

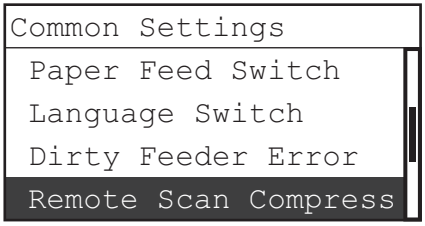

Use [▼] or [▲] to select <Remote Scan Compress> → press [OK].

The Remote Scan Compress menu appears.

3 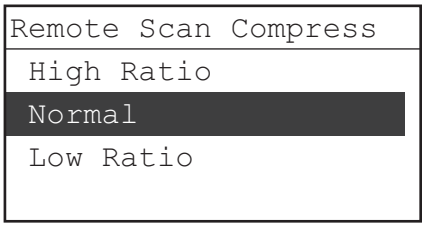

Use [▼] or [▲] to select <High Ratio>, <Normal>, or <Low Ratio> → press [OK].

Details of each item are as follows:

<High Ratio>
A small amount of memory is used for scanning the document, but the images have a lower image quality.

<Normal>
The amount of memory used for the document and the quality of the images are moderate. The compression ratio is between the High Ratio and Low Ratio settings.

<Low Ratio>
A large amount of memory is used for scanning the document, but the images have a higher image quality.

The selected mode is set.

4 **Press (Reset) to return to the Standby display.**

Setting the Gamma Value for Remote Scans

You can set the gamma value that is used for scanning color documents into your computer through the Network Scan function. Select a gamma value that is most suited to your computer settings so that you can print the document from your computer with the optimal density.

NOTE

- For more information on the Network Scan function, see the *Network ScanGear Guide*.
- The default setting is 'Gamma 1.8'.

1 Press (Additional Functions) → use [▼] or [▲] to select <Common Settings> → press [OK].

For help, see the screen shots in step 2 of "Initial Function at Power ON," on p. 3-5.

The Common Settings menu appears.

2

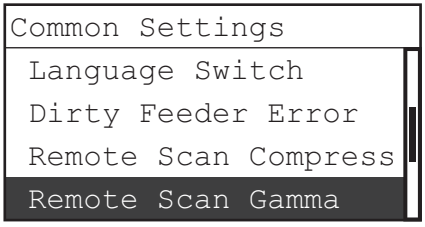

Use [▼] or [▲] to select <Remote Scan Gamma> → press [OK].

The Remote Scan Gamma menu appears.

3

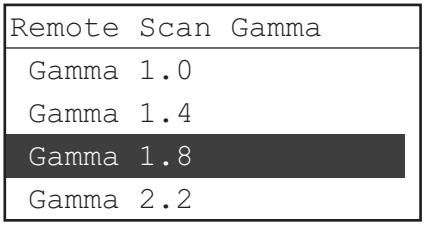

Use [▼] or [▲] to select <Gamma 1.0>, <Gamma 1.4>, <Gamma 1.8>, or <Gamma 2.2> → press [OK].

The selected mode is set.

4 Press (Reset) to return to the Standby display.

Switching between Inch and Millimeter

You can select either inch or millimeter for the unit of measurement.

NOTE

The default setting is 'mm'.

1 Press (Additional Functions) → use [▼] or [▲] to select <Common Settings> → press [OK].

For help, see the screen shots in step 2 of "Initial Function at Power ON," on p. 3-5.

The Common Settings menu appears.

2

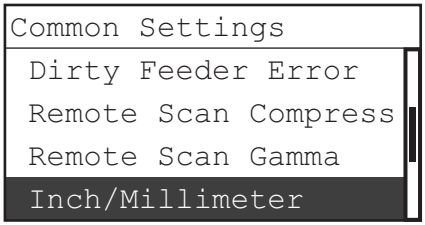

Use [▼] or [▲] to select <Inch/Millimeter> → press [OK].

The Inch/Millimeter Switch menu appears.

3

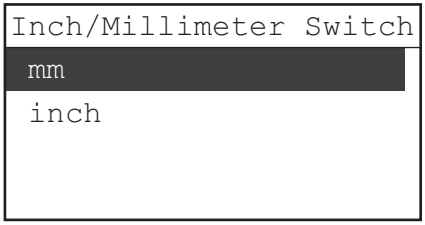

Use [▼] or [▲] to select <mm> or <inch> → press [OK].

The selected mode is set.

4 Press (Reset) to return to the Standby display.

Selecting the Paper Size Group

The Paper Size Group setting determines which paper size options are available for the machine. You can select from three different paper size groups: <AB>, <inch>, and <A>.

NOTE

The default setting is 'A'.

1 Press (Additional Functions) → use [▼] or [▲] to select <Common Settings> → press [OK].

For help, see the screen shots in step 2 of "Initial Function at Power ON," on p. 3-5.

The Common Settings menu appears.

2

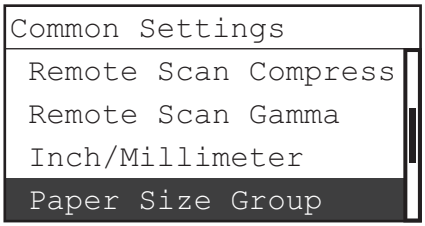

Use [▼] or [▲] to select <Paper Size Group> → press [OK].

The Paper Size Group menu appears.

3

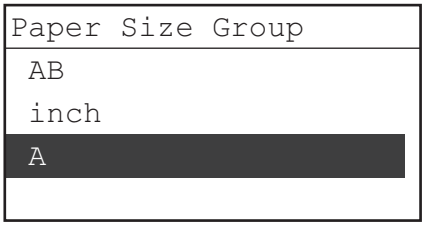

Use [▼] or [▲] to select <AB>, <inch>, or <A> → press [OK].

Details of each item are as follows:

<AB>
Paper size is displayed using A and B series of the ISO paper sizes.

<inch>
Paper size is displayed using inch sizes.

<A>
Paper size is displayed using A series of the ISO paper sizes.

The selected mode is set.

4 Press (Reset) to return to the Standby display.

Returning the Common Settings to Their Defaults

You can restore all of the Common Settings to their default (initial settings).

NOTE

If you change the Display Language, and then set to return the Common Settings to their default settings, the language shown on the LCD display does not change. (See "Changing the Language on the LCD Display," on p. 3-22.)

1 Press (Additional Functions) → use [▼] or [▲] to select <Common Settings> → press [OK].

For help, see the screen shots in step 2 of "Initial Function at Power ON," on p. 3-5.

The Common Settings menu appears.

2

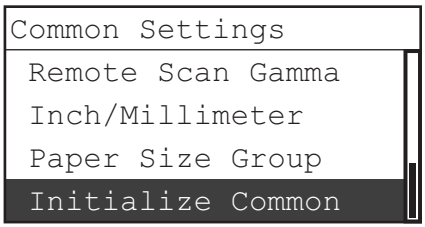

Use [▼] or [▲] to select <Initialize Common> → press [OK].

The Initialize Common menu appears.

3



Use [◀] or [▶] to select <Yes>.

To quit, select <No>.

4 Press (Reset) to return to the Standby display.

Timer Settings

The machine is equipped with three types of automatic functions that are controlled by the internal timer system: Auto Sleep Time, Auto Clear Time, and Auto Shutdown Time.

Auto Sleep Time

If the machine remains idle for a certain period of time (after the last print job or key operation is performed), the control panel power switch automatically switches OFF to save power. The machine has entered the Sleep mode. You can specify the time it takes for the machine to enter the Sleep mode (from 3 to 30 minutes)*. You can also set Auto Sleep Time to 'Off'.

* It is recommended to use the factory-installed settings for this item.

NOTE

- To set the machine to manually enter the Sleep mode, or to restore the machine from the Sleep mode, press the control panel power switch.
- The machine will not enter the Sleep mode in the following cases:
  - The machine is in operation.
  - All paper drawers are empty.
  - There is a paper jam.
  - The toner cartridge is empty.
- The machine will recover automatically from the Sleep mode when a print job is sent from a computer or via the network.
- The default settings are 'On' and '5 min'.

1 Press (Additional Functions).

The Additional Functions menu appears.

2

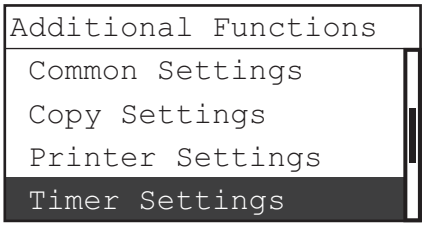

Use [▼] or [▲] to select <Timer Settings> → press [OK].

The Timer Settings menu appears.

3

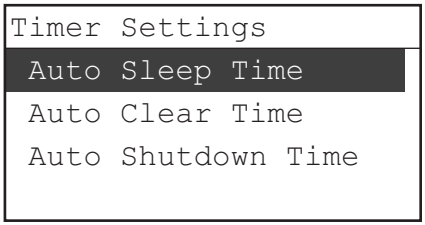

Use [▼] or [▲] to select <Auto Sleep Time> → press [OK].

The Auto Sleep Time menu appears.

4

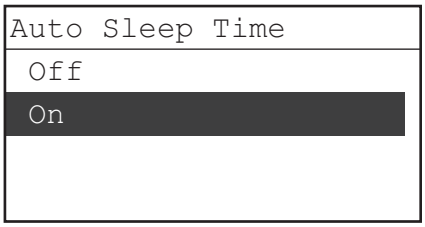

Use [▼] or [▲] to select <Off> or <On> → press [OK].

If you select <Off> → press [OK], proceed to step 6.

If you select <On> → press [OK], proceed to step 5.

5

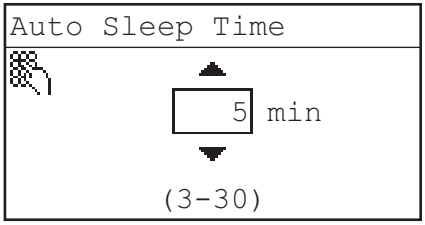

Use [▼] or [▲] to select the desired time period → press [OK].

You can also enter values using ⓪ - ⑨ (numeric keys).

The Auto Sleep Time can be set from 3 to 30 minutes in one minute increments.

The selected mode is set.

6 **Press [⁄⁄] (Reset) to return to the Standby display.**

Auto Clear Time

If the machine remains idle for a certain period of time (after the last print job or a key operation is performed), the display returns to the Standby display or the screen of the selected function. This period of time is called the “Auto Clear Time.”

The Auto Clear Time mode can be set from 1 to 9 minutes in one-minute increments, and can also be set to ‘Off’.

NOTE

The default settings are ‘On’ and ‘2 min’.

1 **Press (Additional Functions) → use [▼] or [▲] to select <Timer Settings> → press [OK].**

For help, see the screen shots in step 2 of "Auto Sleep Time," on p. 3-30.

The Timer Settings menu appears.

2

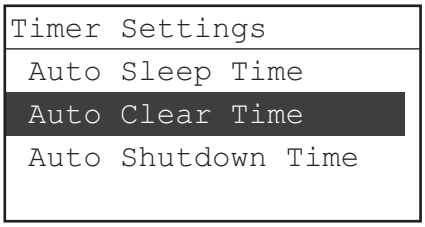

Use [▼] or [▲] to select <Auto Clear Time> → press [OK].

The Auto Clear Time menu appears.

3

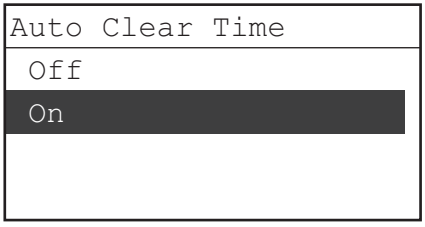

Use [▼] or [▲] to select <Off> or <On> → press [OK].

If you select <Off> → press [OK], proceed to step 5.

If you select <On> → press [OK], proceed to step 4.

4

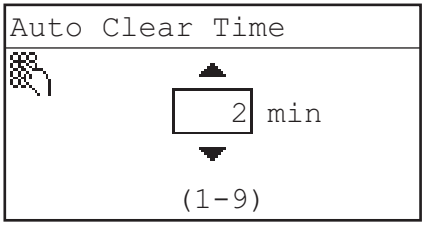

Use [▼] or [▲] to select the desired time period → press [OK].

You can also enter values using ⓪ - ⑨ (numeric keys).

The Auto Clear Time can be set from 1 to 9 minutes in one minute increments.

The selected mode is set.

5 **Press [Reset] (Reset) to return to the Standby display.**

Auto Shutdown Time

You can set the machine to automatically shut down. The machine automatically turns OFF the main power switch after the specified period of idle time has elapsed since entering the Sleep mode.

Auto Shutdown Time can be set from 1 to 8 hours in one-hour increments, and can also be set to 'Off'.

IMPORTANT

When <Auto Shutdown Time> is enabled, the machine may automatically shut down even if you are operating the machine from the Remote UI.

NOTE

The default settings are 'On' and '4 hr'.

1 **Press (Additional Functions) → use [▼] or [▲] to select <Timer Settings> → press [OK].**

For help, see the screen shots in step 2 of "Auto Sleep Time," on p. 3-30.

The Timer Settings menu appears.

2

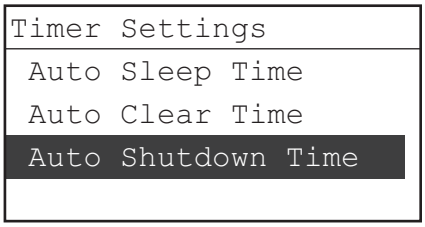

Use [▼] or [▲] to select <Auto Shutdown Time> → press [OK].

The Auto Shutdown Time menu appears.

3

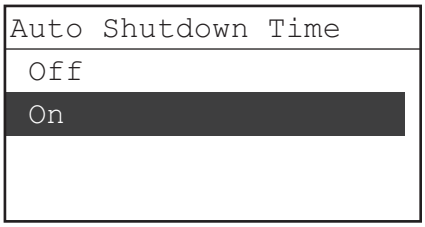

Use [▼] or [▲] to select <Off> or <On> → press [OK].

If you select <Off> → press [OK], proceed to step 5.

If you select <On> → press [OK], proceed to step 4.

4

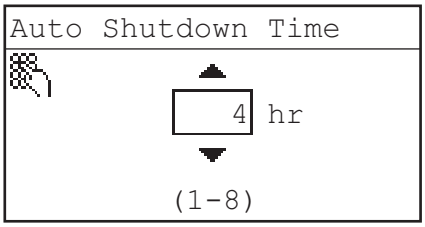

Use [▼] or [▲] to select the desired time period → press [OK].

You can also enter values using ⓪ - ⑨ (numeric keys).

The Auto Shutdown Time can be set from 1 to 8 hours in one hour increments.

The selected mode is set.

5 **Press (Reset) to return to the Standby display.**

Adjusting the Machine

This section describes how you can adjust the settings of the machine to improve print quality and to prevent paper jams, which may occur when a variety of functions are used.

It is recommended that you perform these settings regularly to prevent a number of problems from occurring.

Setting the Fixing Mode for Bond Paper

Use this setting when you copy or print on bond paper.

NOTE
The default setting is 'Off'.

1 Press (Additional Functions).

The Additional Functions menu appears.

2

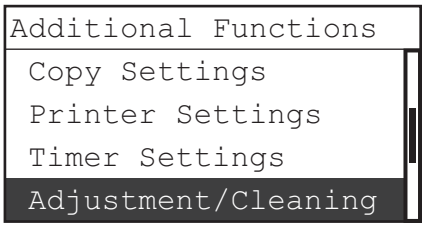

Use [▼] or [▲] to select <Adjustment/Cleaning> → press [OK].

The Adjustment/Cleaning menu appears.

3

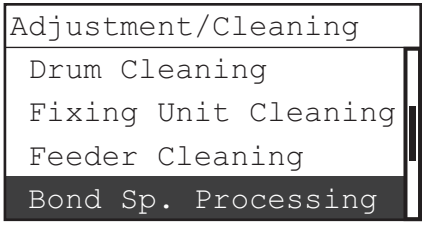

Use [▼] or [▲] to select <Bond Sp. Processing> → press [OK].

The Bond Sp. Processing menu appears.

4

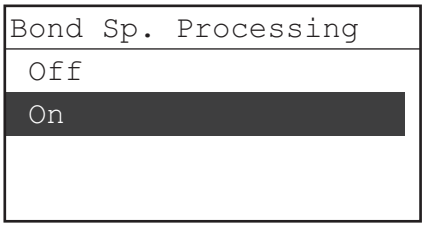

Use [▼] or [▲] to select <Off> or <On> → press [OK].

Details of each item are as follows:

<Off>
Disables the fixing mode for bond paper.

<On>
Enables the fixing mode for bond paper.

The selected mode is set.

5 **Press (Reset) to return to the Standby display.**

Improving Print Quality and Density

If you notice a degradation in print quality or irregularity in print density, use Special Mode M. This mode enables you to select the machine's transcription output from three levels. Select a higher output level if you want to copy or print on paper that is hard for toner to be fixed on, such as an index card.

NOTE

The default setting is 'Standard'.

1 **Press (Additional Functions) → use [▼] or [▲] to select <Adjustment/Cleaning> → press [OK].**

For help, see the screen shots in step 2 of "Setting the Fixing Mode for Bond Paper," on p. 3-35.

The Adjustment/Cleaning menu appears.

2

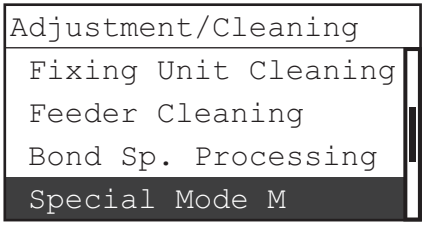

Use [▼] or [▲] to select <Special Mode M> → press [OK].

The Special Mode M menu appears.

3

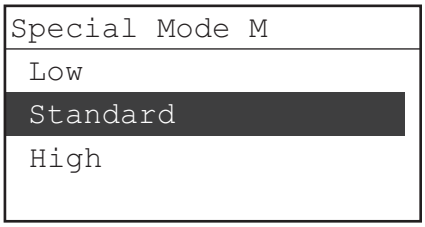

Use [▼] or [▲] to select <Low>, <Standard>, or <High> → press [OK].

Details of each item are as follows:

<Low>
The transcription output is low.

<Standard>
The transcription output is moderate.

<High>
The transcription output is high.

The selected mode is set.

4 **Press [ ] (Reset) to return to the Standby display.**

Preventing Paper Curl or Jams Caused by a High-humidity Environment

When printing on paper that has absorbed moisture, the paper may curl or jam. If the machine is used in a high-humidity environment, use Special Mode N to prevent paper from curling or jamming.

IMPORTANT

Do not use paper that has been exposed to high temperature or humidity for an extended period of time. Printing on such paper will result in frequent paper jams.

NOTE

- If Special Mode N is activated, it may take the machine longer to print. If you notice that printing has slowed, set Special Mode N to 'Off'.
- The default setting is 'Off'.

1 **Press [ ] (Additional Functions) → use [▼] or [▲] to select <Adjustment/Cleaning> → press [OK].**

For help, see the screen shots in step 2 of "Setting the Fixing Mode for Bond Paper," on p. 3-35.

The Adjustment/Cleaning menu appears.

2

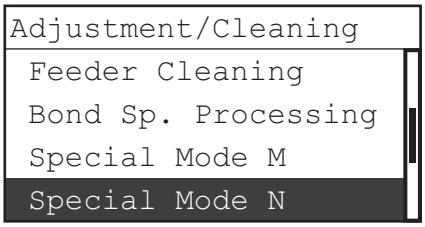

Use [▼] or [▲] to select <Special Mode N> → press [OK].

The Special Mode N menu appears.

3

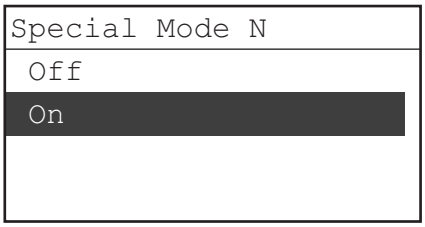

Use [▼] or [▲] to select <Off> or <On> → press [OK].

Details of each item are as follows:

<Off>
Disables Special Mode N.

<On>
Prevents curling of paper that has absorbed moisture.

The selected mode is set.

NOTE

If you select <On> when paper is not moistened, the print quality may be deteriorated.

4 **Press [ ] (Reset) to return to the Standby display.**

Preventing Paper Jams when Printing on the Back Side of Printed Paper

When printing on the back side of printed paper, paper jams may occur more frequently because the paper does not separate easily from the drum. In this case, use Special Mode O to prevent paper jams.

NOTE

The default settings are 'Off' for both <Stack Bypass> and <Drawer>.

1 **Press [ ] (Additional Functions) → use [▼] or [▲] to select <Adjustment/Cleaning> → press [OK].**

For help, see the screen shots in step 2 of "Setting the Fixing Mode for Bond Paper," on p. 3-35.

The Adjustment/Cleaning menu appears.

2

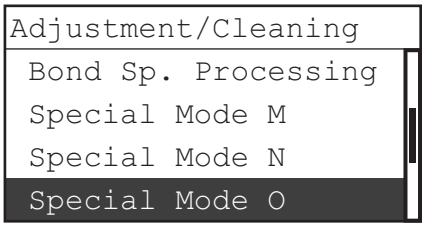

Use [▼] or [▲] to select <Special Mode O> → press [OK].

The Special Mode O menu appears.

3

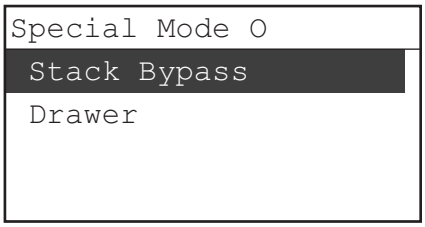

Use [▼] or [▲] to select <Stack Bypass> or <Drawer> → press [OK].

If <Stack Bypass> is selected, the Stack Bypass menu appears.

If <Drawer> is selected, the Drawer menu appears.

4

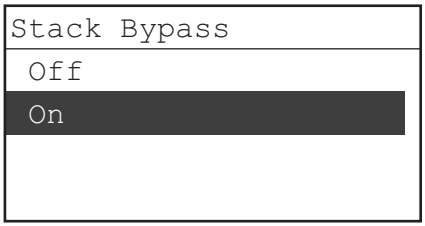

Use [▼] or [▲] to select <Off> or <On> → press [OK].

Details of each item are as follows:

<Off>
Disables Special Mode O.

<On>
Paper separates easily from the drum, preventing paper jams.

The selected mode is set.

NOTE

When you select <On>, the image may become faint.

5 **Press (Reset) to return to the Standby display.**

Preventing Paper Curl Due to Paper Type

You can take advantage of Special Mode P when using paper that curls easily, such as lightweight paper or recycled paper; Special Mode P prevents such types of paper from curling.

NOTE

- If both the Special Mode N and Special Mode P settings are enabled, Special Mode N has priority.
- The default setting is 'Off'.

1 **Press (Additional Functions) → use [▼] or [▲] to select <Adjustment/Cleaning> → press [OK].**

For help, see the screen shots in step 2 of "Setting the Fixing Mode for Bond Paper," on p. 3-35.

The Adjustment/Cleaning menu appears.

2

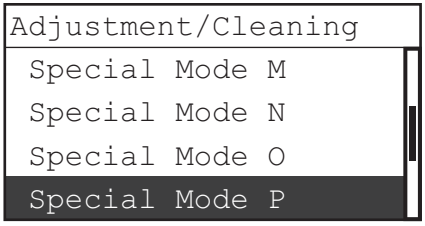

Use [▼] or [▲] to select <Special Mode P> → press [OK].

The Special Mode P menu appears.

3

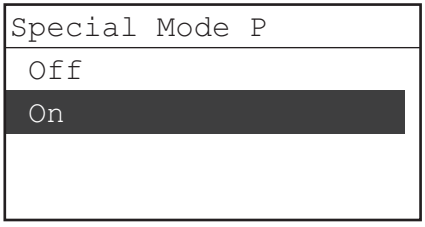

Use [▼] or [▲] to select <Off> or <On> → press [OK].

Details of each item are as follows:

<Off>:
Disables Special Mode P.

<On>:
Prevents paper from curling.

The selected mode is set.

4 **Press (Reset) to return to the Standby display.**

Reducing Wait Time for the Next Job

When you continue to make copies after copying on paper such as A4R, A5, or A5R, the machine may take a long time to resume printing. Use Special Mode S to reduce the wait time for your next job.

NOTE

- If you set this mode to 'Speed Priority 1' or 'Speed Priority 2', the previously printed image may re-appear faintly on the next output.
- The default setting is 'Off'.

1 **Press (Additional Functions) → use [▼] or [▲] to select <Adjustment/Cleaning> → press [OK].**

For help, see the screen shots in step 2 of "Setting the Fixing Mode for Bond Paper," on p. 3-35.

The Adjustment/Cleaning menu appears.

2

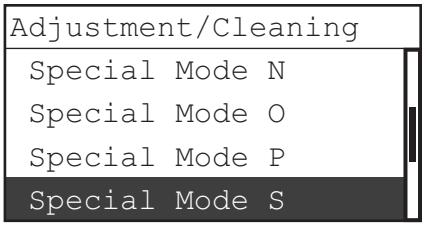

Use [▼] or [▲] to select <Special Mode S> → press [OK].

The Special Mode S menu appears.

3

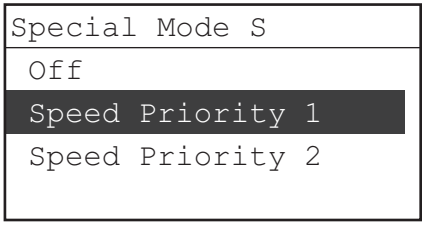

Use [▼] or [▲] to select <Off>, <Speed Priority 1>, or <Speed Priority 2> → press [OK].

Details of each item are as follows:

<Off>
Does not reduce the wait time.

<Speed Priority 1>
Printing resumes quickly.

<Speed Priority 2>
Reduces the wait time to a lesser degree.

The selected mode is set.

4 **Press (Reset) to return to the Standby display.**

Adjusting Output Speed in the Rotate + Collate Mode

Printing with the Rotate + Collate mode involves two different paper sources, and a certain wait time is required to switch them. You can make this wait time shorter or longer by selecting whether to give priority to the speed or image quality.

NOTE

- This mode is available only if the optional Finisher-U2 is not attached to the machine.
- The default setting is 'Speed Priority 1'.

1 **Press (Additional Functions) → use [▼] or [▲] to select <Adjustment/Cleaning> → press [OK].**

For help, see the screen shots in step 2 of "Setting the Fixing Mode for Bond Paper," on p. 3-35.

The Adjustment/Cleaning menu appears.

2

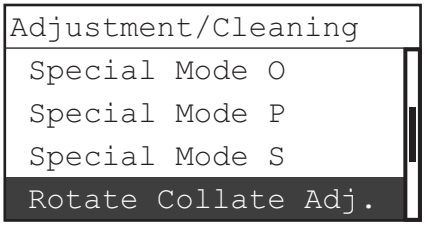

Use [▼] or [▲] to select <Rotate Collate Adj.> → press [OK].

The Rotate Collate Adj. menu appears.

3

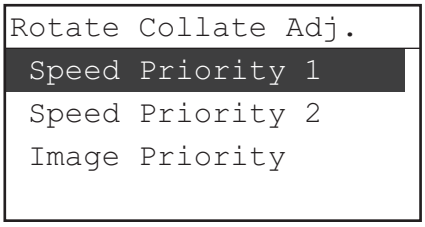

Use [▼] or [▲] to select <Speed Priority 1>, <Speed Priority 2>, or <Image Priority> → press [OK].

Details of each item are as follows:

<Speed Priority 1>
The wait time is shortest, but the image quality is lowest.

<Speed Priority 2>
The wait time and image quality are both moderate.

<Image Priority>
The wait time is longest, but the image quality is highest.

The selected mode is set.

4 **Press (Reset) to return to the Standby display.**

Feeder Smudge Adjustment

If the feeder is dirty, dots or lines may appear on copies or prints. The Dirty Feeder Adjustment mode prevents dirt and grime in the feeder from appearing on your prints and copies.

NOTE

- This mode is available only if the optional feeder (DADF-P2) is attached to the machine.
- While some dots or lines may continue to be printed when the Dirty Feeder Adjustment mode is set to 'On', copies are significantly clearer than when it is set to 'Off'.
- The default setting is 'On'.

1 **Press (Additional Functions) → use [▼] or [▲] to select <Adjustment/Cleaning> → press [OK].**

For help, see the screen shots in step 2 of "Setting the Fixing Mode for Bond Paper," on p. 3-35.

The Adjustment/Cleaning menu appears.

2

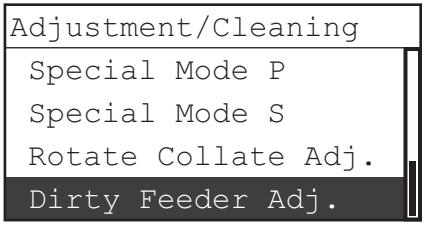

Use [▼] or [▲] to select <Dirty Feeder Adj.> → press [OK].

The Dirty Feeder Adj. menu appears.

3

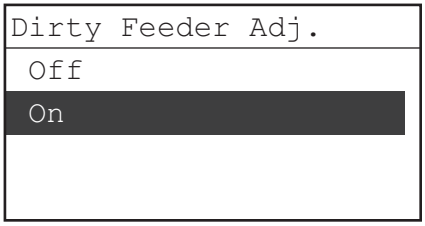

Use [▼] or [▲] to select <Off> or <On> → press [OK].

The selected mode is set.

4 **Press (Reset) to return to the Standby display.**

Printing the User's Data List

The User's Data List enables you to check the current settings of the machine.

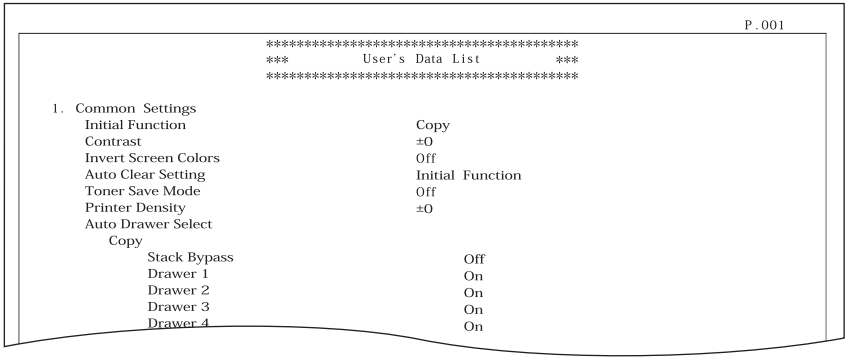

P.001

***

4

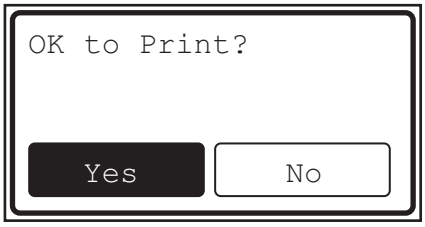

Use [◀] or [▶] to select <Yes> → press [OK].

The User's Data List is printed.

System Manager Settings

4

CHAPTER

This chapter describes settings that can be made by the person in charge of the machine's operation, such as the System Manager.

Specifying the System Manager Settings 4-2
- Setting System Manager ID and System Password 4-2
- Setting the System Manager's Name 4-4

Device Information Settings 4-6

Department ID Management 4-8
- Setting Department ID Management 4-9
- Registering the Department ID, Password, and Page Limit 4-10
- Changing or Erasing the Department ID, Password and Page Limit 4-17
- Checking Counter Information 4-20
- Printing Counter Information 4-23
- Clearing Page Totals 4-25
- Accepting Print Jobs with Unknown IDs 4-26
- Accepting Scan Jobs with Unknown IDs 4-28

User ID Management 4-30

Remote UI 4-32

Displaying the Job Log 4-34

Accepting Jobs through the USB Interface Port 4-36

Specifying the System Manager Settings

You can set an ID and a password for the System Manager. Once the System Manager ID and System Password are set, only the System Manager can access and change the System Settings.

The System Manager Settings can be set from the Additional Functions menu. (See “What Are Additional Functions?,” on p. 3-2.)

NOTE

- For instructions on entering characters, see “Entering Characters,” on p. 2-6.
- The maximum number of digits that you can store for the System Manager ID and System Password is seven. If you enter fewer than seven digits for either setting, the machine stores them with leading zeros.
  - Example: If <02> or <002> is entered, <0000002> is stored.

Setting System Manager ID and System Password

You must set a System Manager ID and System Password if you want to manage the operation of the machine.

1 Press (Additional Functions).

The Additional Functions menu appears.

2

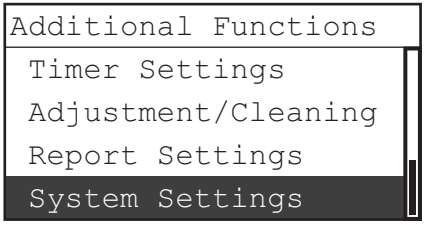

Use [▼] or [▲] to select <System Settings> → press [OK].

If the System Manager ID and System Password have already been set, enter the System Manager ID and System Password using ⓪ - ⑨ (numeric keys) → press ⓘⓓ (ID).

The System Settings menu appears.

3

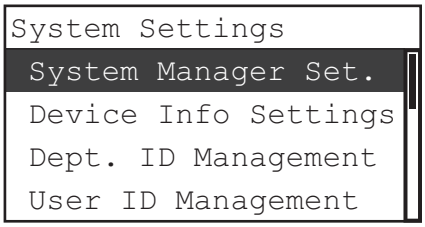

Use [▼] or [▲] to select <System Manager Set.> → press [OK].

The System Manager Set. menu appears.

4

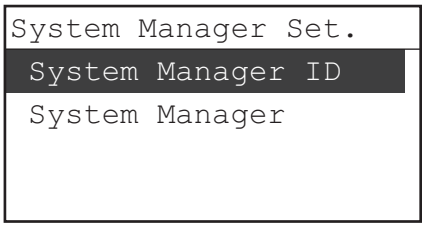

Use [▼] or [▲] to select <System Manager ID> → press [OK].

The System Manager ID menu appears.

5

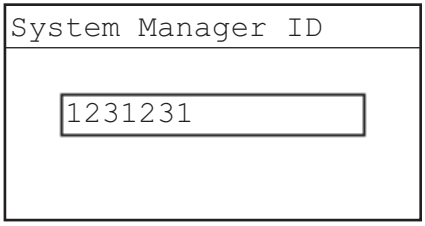

Enter a System Manager ID (up to seven digits) using ⓪ - ⑨ (numeric keys) → press [OK].

You cannot store a System Manager ID with only zeros as the number, such as <0000000>. If you enter a number that begins with zeros, the leading zeros are ignored.

Example: If <02> or <002> is entered, <0000002> is stored.

The System Manager ID is stored.

NOTE

If you make a mistake when entering a number, press Ⓒ (Clear) to clear the entire number → enter the correct number.

6

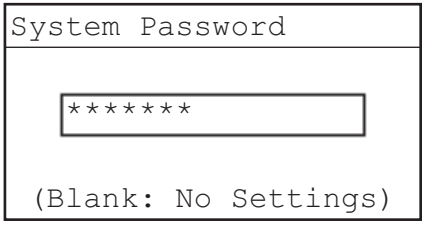

Enter a System Password (up to seven digits) using ⓪ - ⑨ (numeric keys) → press [OK].

NOTE

If you make a mistake when entering the password, press Ⓒ (Clear) to clear the entire password → enter the correct password.

7

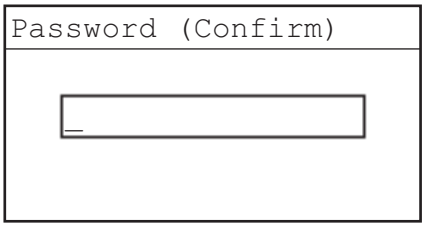

If the screen on the left appears, enter the System Password again to confirm → press [OK].

The System Password is stored, and the screen returns to the System Manager Set. menu.

NOTE

If you have entered a number different from the one set in step 6, you must set the password over again. Repeat steps 6 and 7 until the screen returns to the System Manager Set. menu.

8 **Press (Reset) to return to the Standby display.**

Setting the System Manager's Name

Follow the procedure below to set the System Manager's name.

1 **Press (Additional Functions) → use [▼] or [▲] to select <System Settings> → press [OK].**

For help, see the screen shots in step 2 of "Setting System Manager ID and System Password," on p. 4-2.

If the System Manager ID and System Password have already been set, enter the System Manager ID and System Password using 0 - 9 (numeric keys) → press ID (ID).

The System Settings menu appears.

2

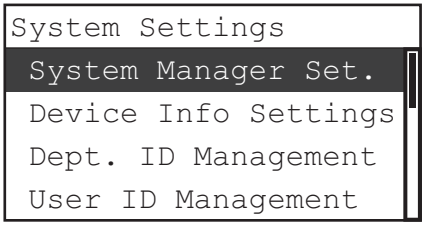

Use [▼] or [▲] to select <System Manager Set.> → press [OK].

The System Manager Set. menu appears.

3

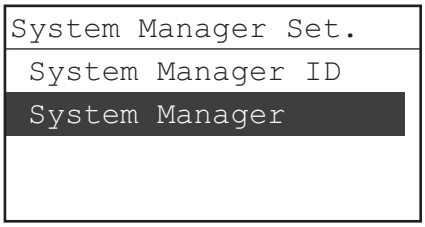

Use [▼] or [▲] to select <System Manager> → press [OK].

The System Manager menu appears.

4

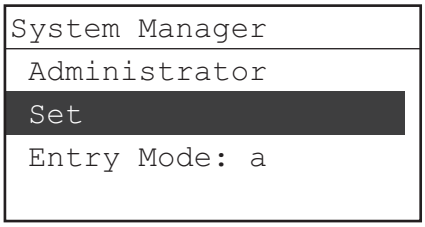

Enter the System Manager's name (up to 32 characters) using ① - ⑨ (numeric keys) → use [▼] or [▲] to select <Set> → press [OK].

NOTE

For instructions on entering characters, see "Entering Characters," on p. 2-6.

The System Manager's name is stored, and the screen returns to the System Settings menu.

5 **Press (Reset) to return to the Standby display.**

Device Information Settings

Device Information enables you to set a name for the machine, and enter information regarding its location.

1 Press (Additional Functions).

The Additional Functions menu appears.

2

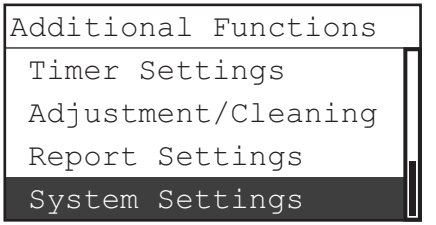

Use [▼] or [▲] to select <System Settings> → press [OK].

If the System Manager ID and System Password have already been set, enter the System Manager ID and System Password using ⓪ - ⑨ (numeric keys) → press ⓘⓓ (ID).

The System Settings menu appears.

3

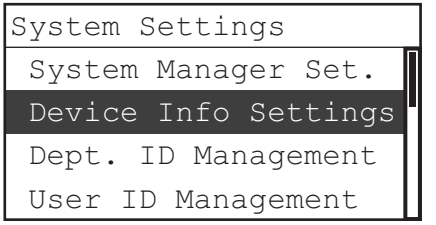

Use [▼] or [▲] to select <Device Info Settings> → press [OK].

The Device Info Settings menu appears.

4

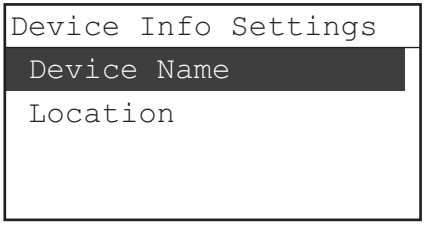

Use [▼] or [▲] to select <Device Name> → press [OK].

5

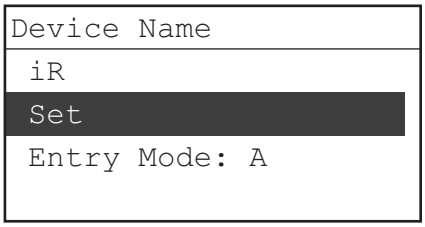

Enter the name of the machine (up to 32 characters) using ① - ⑩ (numeric keys) → use [▼] or [▲] to select <Set> → press [OK].

NOTE

For instructions on entering characters, see "Entering Characters," on p. 2-6.

6

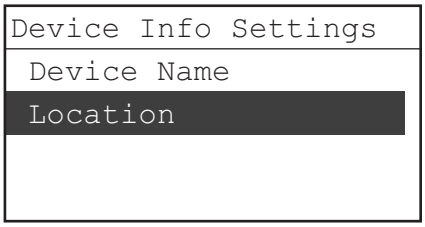

Use [▼] or [▲] to select <Location> → press [OK].

7

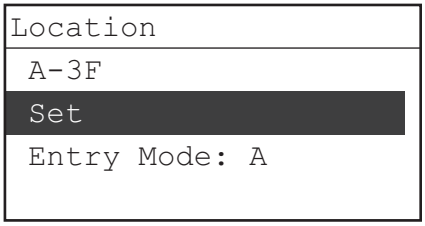

Enter the location of the machine (up to 32 characters) using ① - ⑩ (numeric keys) → use [▼] or [▲] to select <Set> → press [OK].

NOTE

For instructions on entering characters, see "Entering Characters," on p. 2-6.

The device name and the location of the machine are set.

8 **Press [Reset] (Reset) to return to the Standby display.**

Department ID Management

You can register a Department ID and password for each department, and manage the machine by limiting its use to only those who enter the correct Department ID and password. This feature is called Department ID Management.

Department IDs and passwords for up to 100 departments can be registered. Use Department ID Management to keep track of the copy, scan, and print totals for each department.

With Department ID Management, the following settings can be specified:

- Turn Department ID Management 'On' or 'Off'.
- Register the Department ID and password.
- Set page limits for copies, scans, and prints.
- Accept or reject print and scan jobs from computers with unknown IDs.

The Department ID Management settings can be set from the Additional Functions menu. (See "What Are Additional Functions?," on p. 3-2.)

NOTE

- The maximum number of digits that you can store for the Department ID and password is seven. If you enter fewer than seven digits for either setting, the machine stores them with leading zeros.
  - Example: If <02> or <002> is entered, <0000002> is stored.
- You can set the page limit from 1 to 999,999 pages.
- The default setting is 'Off'.

Setting Department ID Management

Follow the procedure below to enable Department ID Management.

1 Press (Additional Functions).

The Additional Functions menu appears.

2

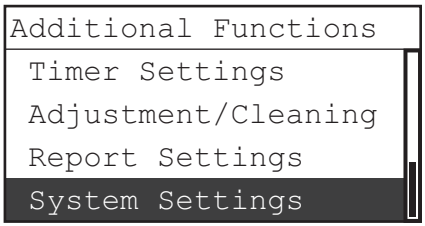

Use [▼] or [▲] to select <System Settings> → press [OK].

If the System Manager ID and System Password have already been set, enter the System Manager ID and System Password using 0 - 9 (numeric keys) → press ID (ID).

The System Settings menu appears.

3

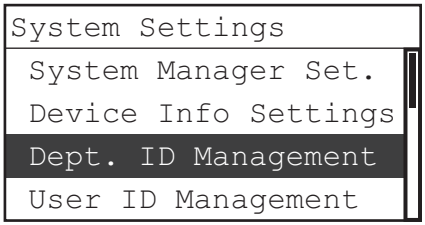

Use [▼] or [▲] to select <Dept. ID Management> → press [OK].

The Dept. ID Management menu appears.

4

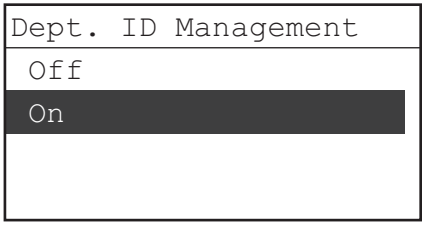

Use [▼] or [▲] to select <On> → press [OK].

If you do not want to use Department ID Management, select <Off>.

Department ID Management is enabled.

5 Press (Reset) to return to the Standby display.

Registering the Department ID, Password, and Page Limit

You can register the Department ID and password after setting Department ID Management to 'On'. For instructions on setting Department ID Management to 'On', see "Setting Department ID Management," on p. 4-9.

Registering the Department ID and password enables you to set copy, scan, and print page limits.

1 Press (Additional Functions) → use [▼] or [▲] to select <System Settings> → press [OK].

For help, see the screen shots in step 2 of "Setting Department ID Management," on p. 4-9.

If the System Manager ID and System Password have already been set, enter the System Manager ID and System Password using 0 - 9 (numeric keys) → press ID (ID).

The System Settings menu appears.

2

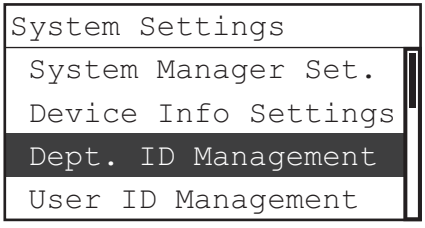

Use [▼] or [▲] to select <Dept. ID Management> → press [OK].

The Dept. ID Management menu appears.

3

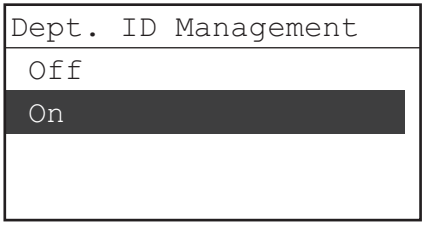

Use [▼] or [▲] to select <On> → press [OK].

4

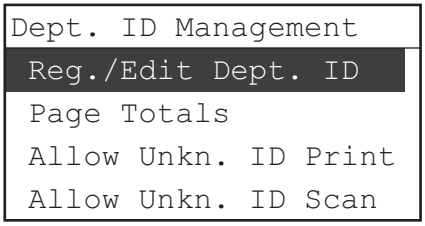

Use [▼] or [▲] to select <Reg./Edit Dept. ID> → press [OK].

5

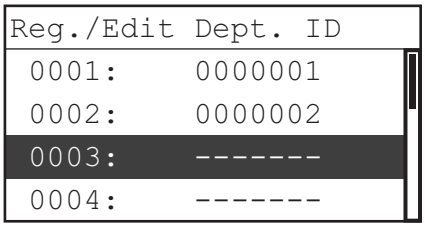

Use [▼] or [▲] to select the number to which the department will be designated → press [OK].

6

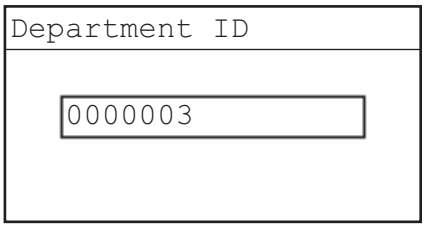

Enter a Department ID (up to seven digits) using ⓪ - ⑨ (numeric keys) → press [OK].

You cannot register a Department ID or password with only zeros as the number, such as <0000000>. If you enter a number that begins with zeros, the leading zeros are ignored.

Example: If <02> or <002> is entered, <0000002> is stored.

The Department ID is stored.

NOTE

If you make a mistake when entering a number, press ⓒ (Clear) to clear the entire number → enter the correct number.

7

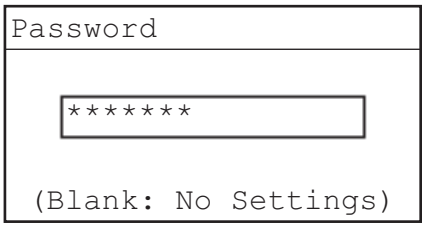

Enter the password (up to seven digits) using ⓪ - ⑨ (numeric keys) → press [OK].

If you do not want to set a password, just press [OK].

NOTE

If you make a mistake when entering the password, press ⓒ (Clear) to clear the password → enter the correct password.

8

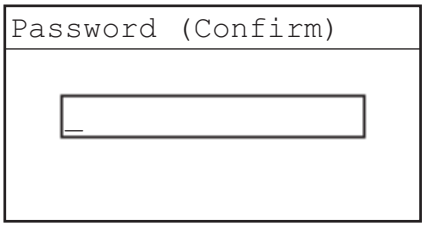

If the screen on the left appears, enter the password again to confirm → press [OK].

The password is set, and the screen returns to the Register Dept. ID menu.

NOTE

If you have entered a number different from the one you set in step 7, you must set the password over again. Repeat steps 7 and 8 until the Register Dept. ID menu appears.

9

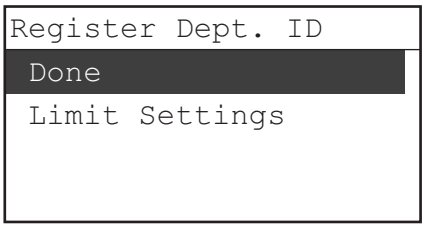

Use [▼] or [▲] to select <Done> → press [OK].

If you want to register another Department ID and password before moving on to specify Limit Settings, repeat steps 4 to 9.

10

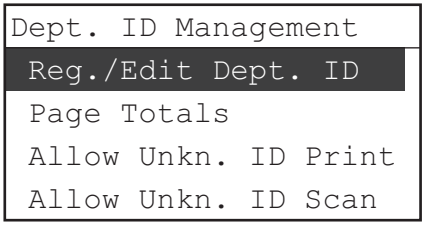

Use [▼] or [▲] to select <Reg./Edit Dept. ID> → press [OK].

11

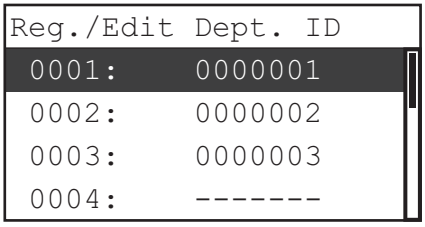

Use [▼] or [▲] to select the Department whose page limit you want to set → press [OK].

NOTE

Press and hold down [▼] or [▲] to quickly and continuously scroll through the registered Department IDs. Continuous scrolling is useful when a number of Department IDs are registered.

12

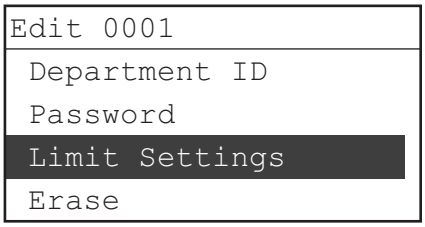

Use [▼] or [▲] to select <Limit Settings> → press [OK].

13 Select the desired function.

● **If you want to set a restriction for the total number of prints and copies:**

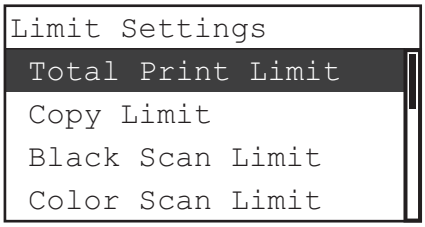

❑ Use [▼] or [▲] to select <Total Print Limit> → press [OK].

NOTE

<Total Print Limit> is the sum of <Copy Limit> and <Print Limit>.

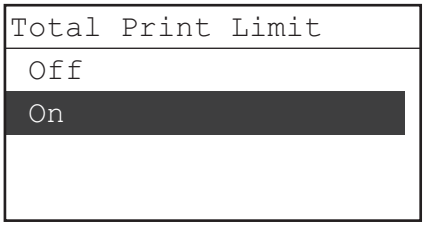

❑ Use [▼] or [▲] to select <On> → press [OK].

If you do not want to set a total page limit, select <Off>.

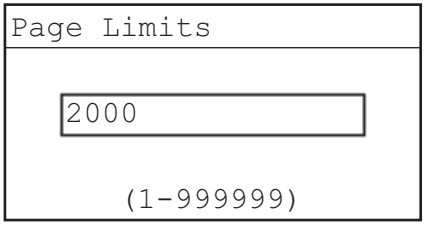

❑ Enter the maximum number (up to six digits) of copies and prints that can be made by the registered Department ID using ⓪ - ⑨ (numeric keys) → press [OK].

The Total Print Limit is set.

NOTE

<Total Print Limit> is the sum of <Copy Limit> and <Print Limit>.

● **If you want to set a page limit restriction for copying:**

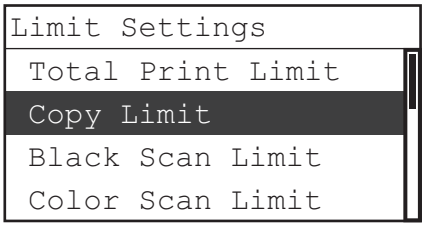

❑ Use [▼] or [▲] to select <Copy Limit> → press [OK].

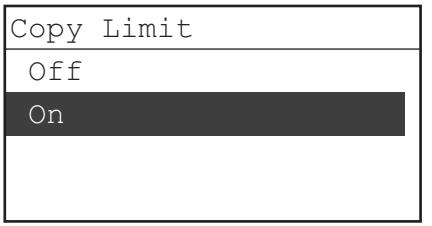

❑ Use [▼] or [▲] to select <On> → press [OK].

If you do not want to set a page limit restriction for copies, select <Off>.

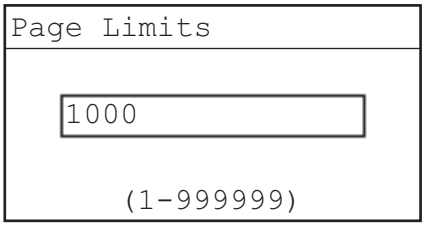

❑ Enter the maximum number (up to six digits) of pages that can be copied by the registered Department ID using ⓪ - ⑨ (numeric keys) → press [OK].

The Copy Limit is set.

● **If you want to set a page limit restriction for black-and-white scanning:**

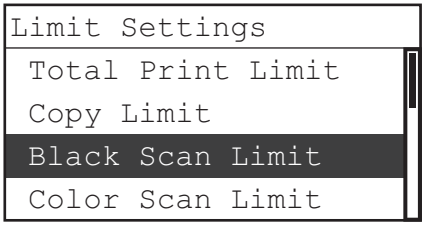

❑ Use [▼] or [▲] to select <Black Scan Limit> → press [OK].

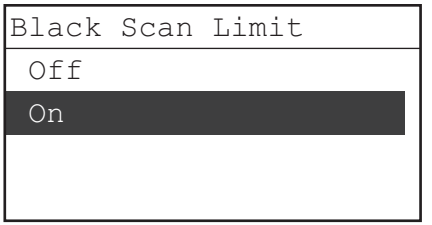

❑ Use [▼] or [▲] to select <On> → press [OK].

If you do not want to set a page limit restriction for black-and-white scans, select <Off>.

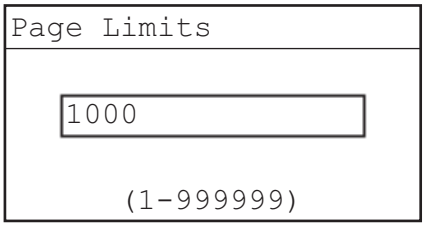

❑ Enter the maximum number (up to six digits) of pages that can be scanned by the registered Department ID using ⓪ - ⑨ (numeric keys) → press [OK].

The Black Scan Limit is set.

● **If you want to set a page limit restriction for color scanning:**

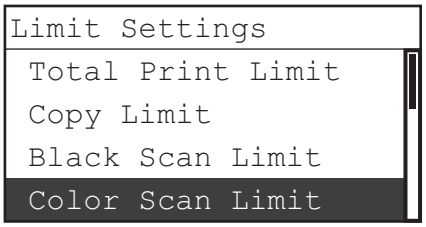

❑ Use [▼] or [▲] to select <Color Scan Limit> → press [OK].

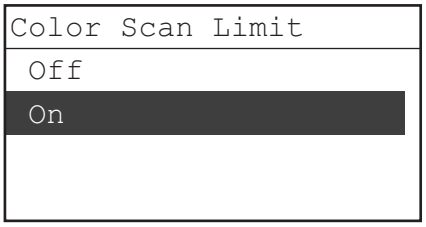

❑ Use [▼] or [▲] to select <On> → press [OK].

If you do not want to set a page limit restriction for color scans, select <Off>.

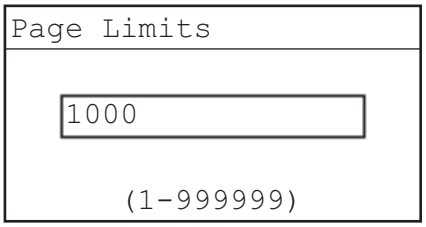

❑ Enter the maximum number (up to six digits) of pages that can be scanned by the registered Department ID using ⓪ - ⑨ (numeric keys) → press [OK].

The Color Scan Limit is set.

● **If you want to set a page limit restriction for printing:**

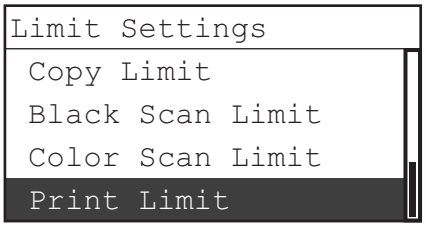

❑ Use [▼] or [▲] to select <Print Limit> → press [OK].

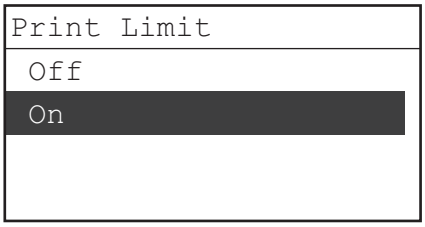

❑ Use [▼] or [▲] to select <On> → press [OK].

If you do not want to set a page limit restriction for prints, select <Off>.

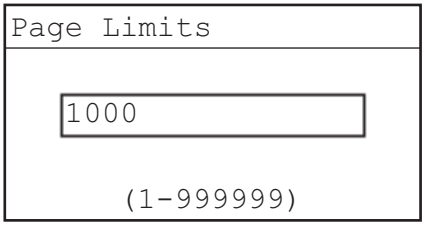

❑ Enter the maximum number (up to six digits) of pages that can be printed by the registered Department ID using ⓪ - ⑨ (numeric keys) → press [OK].

The Print Limit is set.

IMPORTANT

The machine stops scanning if the Scan Limit is reached while the machine is scanning originals that are being fed from the optional feeder. (Those originals that were scanned before the limit is reached are not added to the scan count.)

NOTE

- If you make a mistake when entering a number, press ⓒ (Clear) to clear the number → enter the correct number.
- You can set the page limit from 1 to 999,999 pages. Once a page limit is reached, copying, scanning, or printing is not possible.
- The page limit refers to the number of printed surfaces. Therefore, a two-sided print is counted as two pages.

14 Press [⁄⁄] (Reset) to return to the Standby display.

Changing or Erasing the Department ID, Password and Page Limit

You can make changes to the Department IDs, passwords, and Limit Settings that are already registered. You can also erase a registered Department ID if it is no longer needed.

1 Press (Additional Functions) → use [▼] or [▲] to select <System Settings> → press [OK].

For help, see the screen shots in step 2 of "Setting Department ID Management," on p. 4-9.

If the System Manager ID and System Password have already been set, enter the System Manager ID and System Password using 0 - 9 (numeric keys) → press ID (ID).

The System Settings menu appears.

2

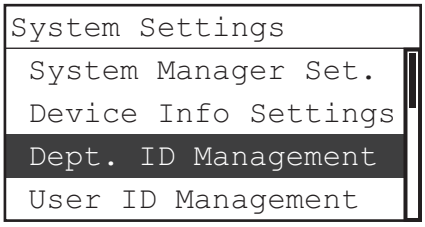

Use [▼] or [▲] to select <Dept. ID Management> → press [OK].

The Dept. ID Management menu appears.

3

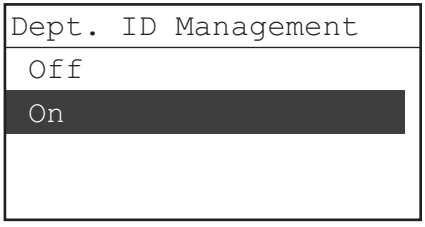

Use [▼] or [▲] to select <On> → press [OK].

4

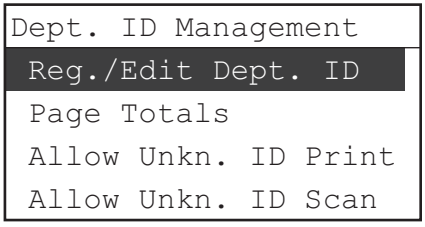

Use [▼] or [▲] to select <Reg./Edit Dept. ID> → press [OK].

5

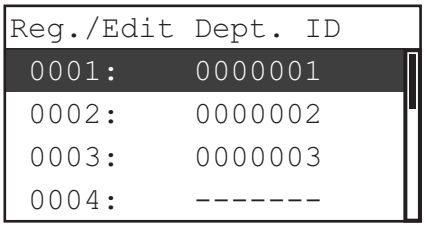

Use [▼] or [▲] to select the Department whose ID, password, and page limit you want to change → press [OK].

NOTE

Press and hold down [▼] or [▲] to quickly and continuously scroll through the registered Department IDs. Continuous scrolling is useful when a number of Department IDs are registered.

6 Select the desired function.

● **If you want to change the Department ID:**

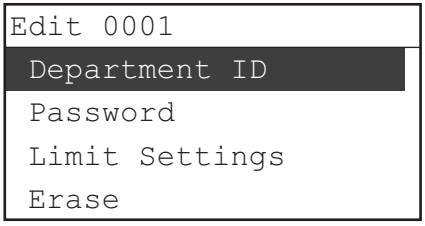

❑ Use [▼] or [▲] to select <Department ID> → press [OK].

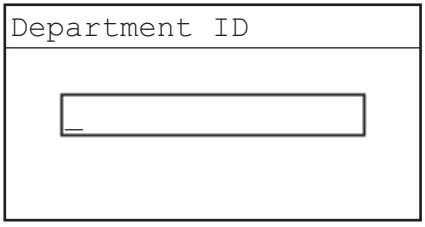

❑ Press ⓒ (Clear) to clear the current Department ID.

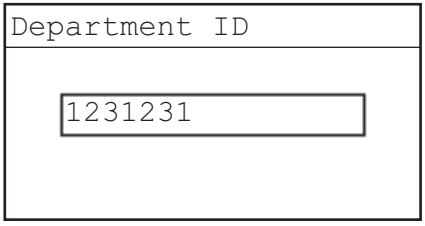

❑ Enter a new Department ID using ⓪ - ⑨ (numeric keys) → press [OK].

For help, see step 6 of “Registering the Department ID, Password, and Page Limit,” on p. 4-10.

The new Department ID is stored.

● **If you want to change the password:**

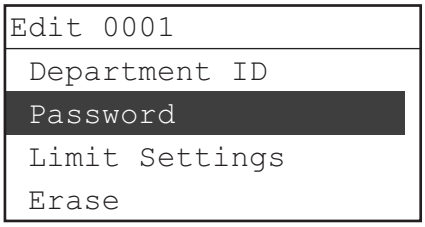

❑ Use [▼] or [▲] to select <Password> → press [OK].

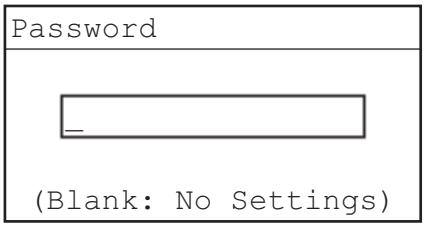

❑ Press ⓒ (Clear) to clear the current password.

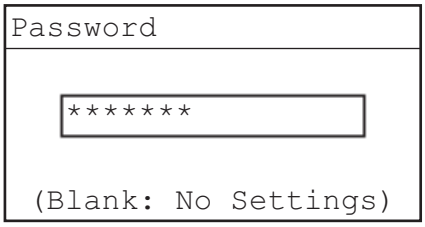

❑ Enter a new password using ⓪ - ⑨ (numeric keys) → press [OK].

For help, see steps 7 and 8 of "Registering the Department ID, Password, and Page Limit," on p. 4-10.

The new password is set.

● **If you want to change the Limit Settings:**

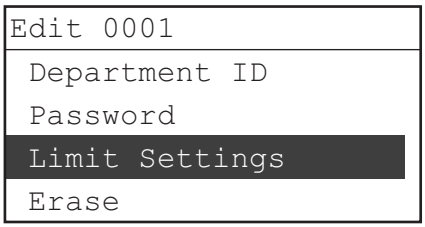

❑ Use [▼] or [▲] to select <Limit Settings> → press [OK].

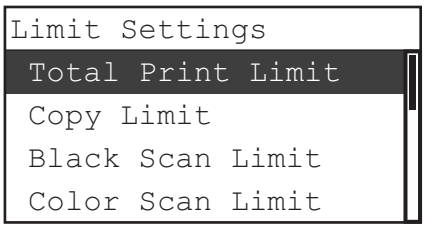

❑ Select and specify the desired Limit Settings options.

For help, see step 10 of "Registering the Department ID, Password, and Page Limit," on p. 4-10.

● **If you want to erase the registered department:**

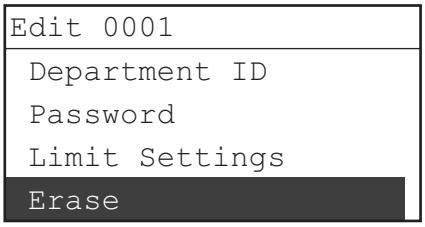

❑ Use [▼] or [▲] to select <Erase> → press [OK].



❑ Use [◀] or [▶] to select <Yes> → press [OK].

NOTE

If you do not want to erase the selected Department ID, select <No>.

The selected Department ID and all of its settings are erased.

7 Press (Reset) to return to the Standby display.

Checking Counter Information

You can check the page totals used by each department.

1 Press (Additional Functions) → use [▼] or [▲] to select <System Settings> → press [OK].

For help, see the screen shots in step 2 of "Setting Department ID Management," on p. 4-9.

If the System Manager ID and System Password have already been set, enter the System Manager ID and System Password using 0 - 9 (numeric keys) → press ID (ID).

The System Settings menu appears.

2

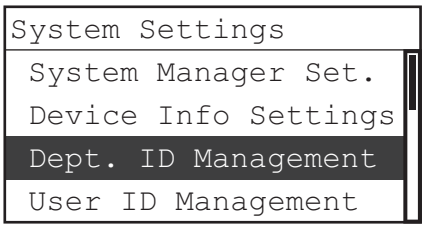

Use [▼] or [▲] to select <Dept. ID Management> → press [OK].

The Dept. ID Management menu appears.

3

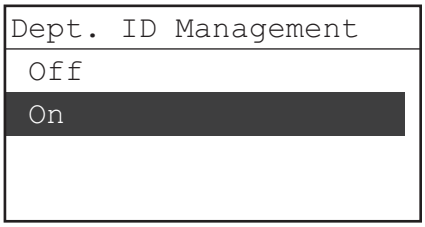

Use [▼] or [▲] to select <On> → press [OK].

4

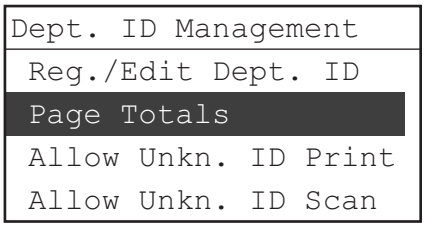

Use [▼] or [▲] to select <Page Totals> → press [OK].

The Page Totals menu appears.

5



Use [▼] or [▲] to select <View Page Totals> → press [OK].

6

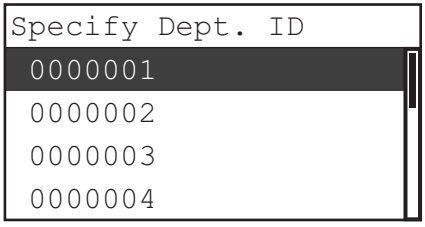

Use [▼] or [▲] to select the Department ID whose counter information you want to view.

NOTE

Press and hold down [▼] or [▲] to quickly and continuously scroll through the registered Department IDs. Continuous scrolling is useful when a number of Department IDs are registered.

7 Select the desired function.

● **If you want to view the counter information for prints and copies:**

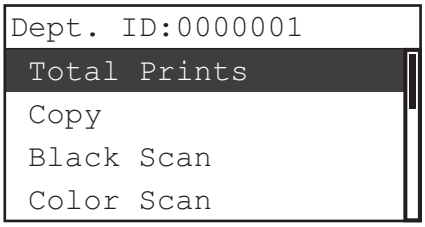

- ❑ Use [▼] or [▲] to select <Total Prints> → press [OK].
- ❑ Check the counter information.

NOTE

<Total Prints> is the sum of <Copy> and <Print> limits.

- ❑ If you want to view other counter information, press [OK] → select another function. Otherwise, proceed to step 8.

● **If you want to view the counter information for copies:**

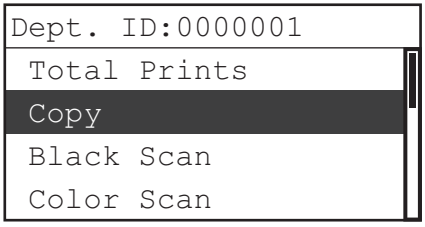

- ❑ Use [▼] or [▲] to select <Copy> → press [OK].
- ❑ Check the counter information.
- ❑ If you want to view other counter information, press [OK] → select another function. Otherwise, proceed to step 8.

● **If you want to view the counter information for black and white scans:**

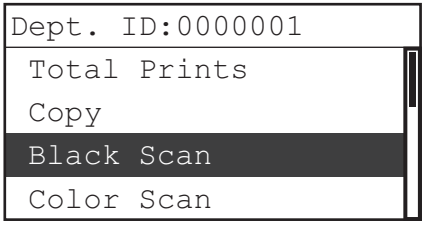

- ❑ Use [▼] or [▲] to select <Black Scan> → press [OK].
- ❑ Check the counter information.
- ❑ If you want to view other counter information, press [OK] → select another function. Otherwise, proceed to step 8.

● **If you want to view the counter information for color scans:**

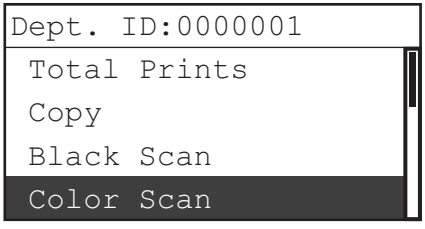

- ❑ Use [▼] or [▲] to select <Color Scan> → press [OK].
- ❑ Check the counter information.
- ❑ If you want to view other counter information, press [OK] → select another function. Otherwise, proceed to step 8.

● **If you want to view the counter information for prints:**

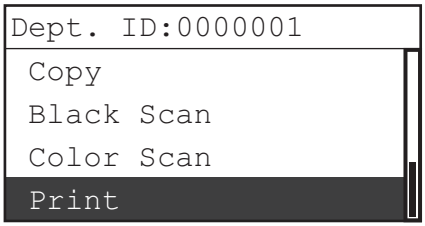

- ❑ Use [▼] or [▲] to select <Print> → press [OK].
- ❑ Check the counter information.
- ❑ If you want to view other counter information, press [OK] → select another function. Otherwise, proceed to step 8.

8 **Press (Reset) to return to the Standby display.**

Printing Counter Information

You can print a list of how much paper was used by each department.

1 **Press (Additional Functions) → use [▼] or [▲] to select <System Settings> → press [OK].**

For help, see the screen shots in steps 2 and 3 of "Setting Department ID Management," on p. 4-9.

If the System Manager ID and System Password have already been set, enter the System Manager ID and System Password using 0 - 9 (numeric keys) → press ID (ID).

The System Settings menu appears.

2

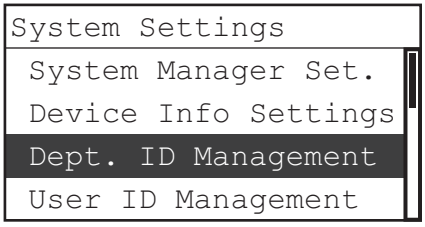

Use [▼] or [▲] to select <Dept. ID Management> → press [OK].

The Dept. ID Management menu appears.

3

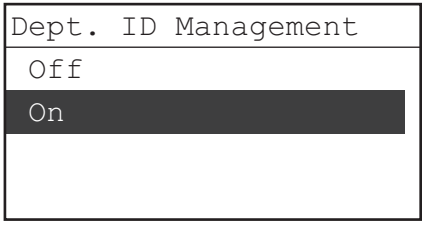

Use [▼] or [▲] to select <On> → press [OK].

4

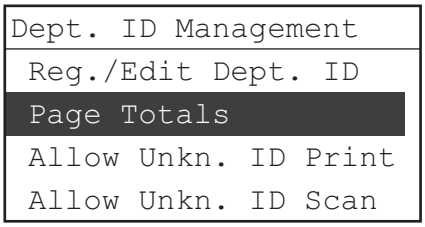

Use [▼] or [▲] to select <Page Totals> → press [OK].

The Page Totals menu appears.

5



Use [▼] or [▲] to select <Print List> → press [OK].

6



Use [◀] or [▶] to select <Yes>.

If you want to quit, select <No>.

Printing starts, and the screen automatically returns to the Standby display.

NOTE

The counter information can be printed if all of the following conditions are satisfied:

- A4, A4R, A3, or B4 (plain, recycled, or color paper) paper is loaded in a paper source that is set to 'On'.
- The above paper source is set to 'Other' in <Auto Drawer Select> in Common Settings (from the Additional Function menu). (See "Auto Paper Selection/Auto Drawer Switching," on p. 3-11.)

Clearing Page Totals

You can clear the page totals for all departments.

1 **Press (Additional Functions) → use [▼] or [▲] to select <System Settings> → press [OK].**

For help, see the screen shots in step 2 of "Setting Department ID Management," on p. 4-9.

If the System Manager ID and System Password have already been set, enter the System Manager ID and System Password using 0 - 9 (numeric keys) → press ID (ID).

The System Settings menu appears.

2

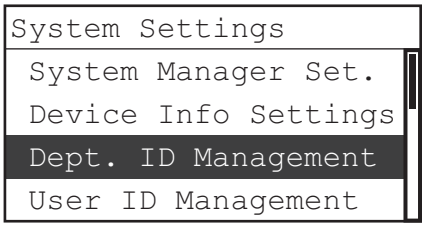

Use [▼] or [▲] to select <Dept. ID Management> → press [OK].

The Dept. ID Management menu appears.

3

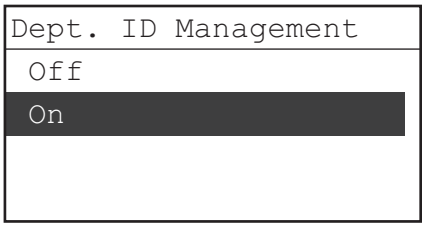

Use [▼] or [▲] to select <On> → press [OK].

4

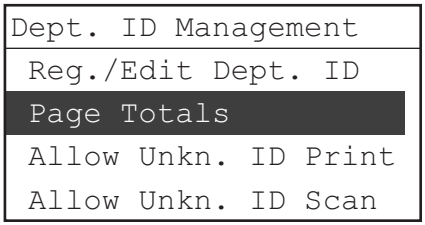

Use [▼] or [▲] to select <Page Totals> → press [OK].

The Page Totals menu appears.

5 

Use [▼] or [▲] to select <Clear All Totals> → press [OK].

6 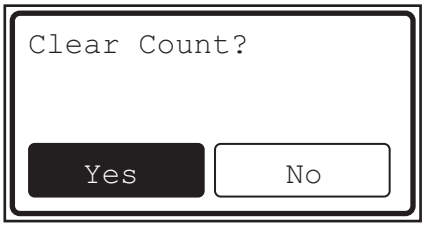

Use [◀] or [▶] to select <Yes>.

If you want to quit, select <No>.

The page totals are cleared.

7 **Press [ ] (Reset) to return to the Standby display.**

Accepting Print Jobs with Unknown IDs

You can specify whether to accept or reject print jobs from computers that do not correspond to any registered Department ID.

NOTE

The default setting is 'On'.

1 **Press [ ] (Additional Functions) → use [▼] or [▲] to select <System Settings> → press [OK].**

For help, see the screen shots in step 2 of "Setting Department ID Management," on p. 4-9.

If the System Manager ID and System Password have already been set, enter the System Manager ID and System Password using 0 - 9 (numeric keys) → press ID (ID).

The System Settings menu appears.

2

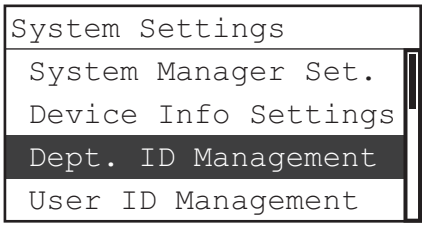

Use [▼] or [▲] to select <Dept. ID Management> → press [OK].

The Dept. ID Management menu appears.

3

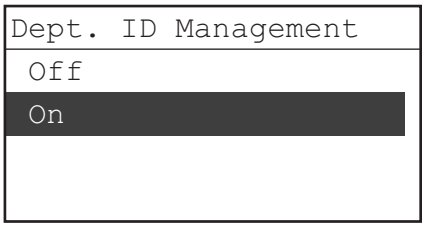

Use [▼] or [▲] to select <On> → press [OK].

4

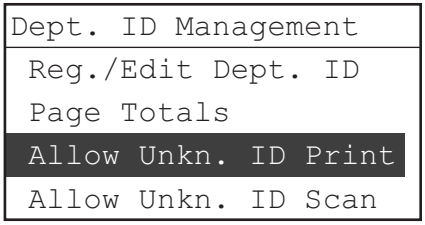

Use [▼] or [▲] to select <Allow Unkn. ID Print> → press [OK].

The Allow Unkn. ID Print menu appears.

5

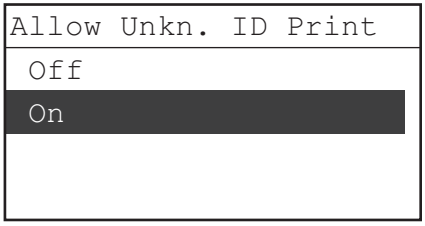

Use [▼] or [▲] to select <Off> or <On> → press [OK].

Details of each item are as follows:

<Off>
The machine does not accept print jobs from computers that do not correspond with a registered Department ID.

<On>
The machine accepts print jobs from computers that do not correspond with a registered Department ID.

The selected mode is set.

6 **Press [Reset] (Reset) to return to the Standby display.**

Accepting Scan Jobs with Unknown IDs

You can specify whether to accept or reject scan jobs from computers that do not correspond to any registered Department ID.

NOTE

The default setting is 'On'.

1 Press (Additional Functions) → use [▼] or [▲] to select <System Settings> → press [OK].

For help, see the screen shots in step 2 of "Setting Department ID Management," on p. 4-9.

If the System Manager ID and System Password have already been set, enter the System Manager ID and System Password using 0 - 9 (numeric keys) → press ID (ID).

The System Settings menu appears.

2

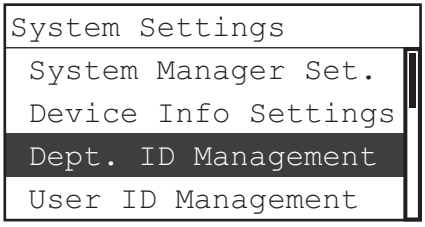

Use [▼] or [▲] to select <Dept. ID Management> → press [OK].

The Dept. ID Management menu appears.

3

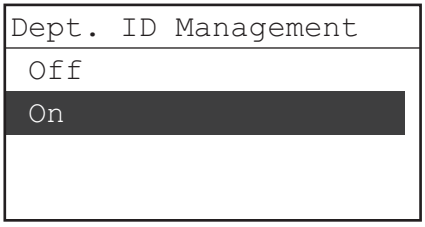

Use [▼] or [▲] to select <On> → press [OK].

4

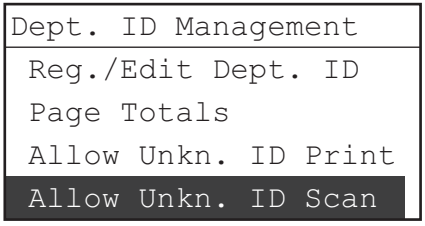

Use [▼] or [▲] to select <Allow Unkn. ID Scan> → press [OK].

The Allow Unkn. ID Scan menu appears.

5

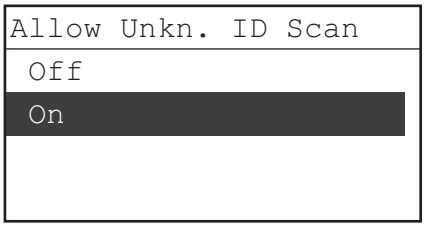

Use [▼] or [▲] to select <Off> or <On> → press [OK].

Details of each item are as follows:

<Off>
The machine does not accept remote scan jobs from computers that do not correspond with a registered Department ID.

<On>
The machine accepts remote scan jobs from computers that do not correspond with a registered Department ID.

The selected mode is set.

6 **Press (Reset) to return to the Standby display.**

User ID Management

If the network connection is available, you can manage the machine using user IDs.

User ID Management enables you to manage up to 100 User IDs. If User ID Management is set to 'On', and User IDs and passwords are registered in the machine, you must enter a User ID and password before using the machine.

IMPORTANT

- The User ID Management function is available only when the optional Network Kit is attached to the machine.
- You must register the User ID and password before you set this mode to 'On'.
- User IDs and passwords must be registered in the machine from the Remote UI beforehand. To access the Remote UI from a computer, you must set the machine configurations. (See "Remote UI," on p. 4-32.) For instructions on registering a User ID and password, see the *Remote UI Guide*.

NOTE

- Each User ID can belong to only one Department ID. You cannot register the same User ID under multiple Department IDs at the same time.
- The default setting is 'Off'.

1 Press (Additional Functions).

The Additional Functions menu appears.

2

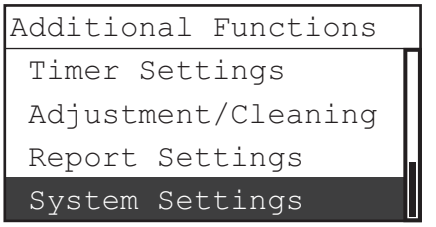

Use [▼] or [▲] to select <System Settings> → press [OK].

If the System Manager ID and System Password have already been set, enter the System Manager ID and System Password using 0 - 9 (numeric keys) → press ID (ID).

The System Settings menu appears.

3

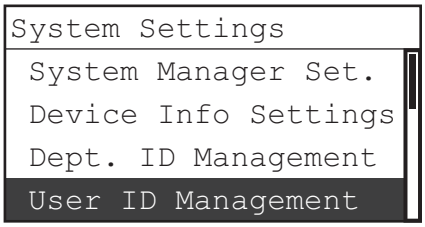

Use [▼] or [▲] to select <User ID Management> → press [OK].

The User ID Management menu appears.

4

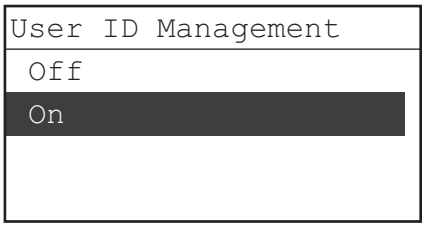

Use [▼] or [▲] to select <On> → press [OK].

If you do not want to use User ID Management, select <Off>.

The selected mode is set.

5 **Press (Reset) to return to the Standby display.**

Remote UI

If the network connection is available, you can set whether to enable the Remote UI (User Interface) to operate the machine and change settings via the network.

Once the Ethernet interface port is configured properly, the machine can be controlled and set up through the Remote UI.

IMPORTANT

The Remote UI is available only when the optional Network Kit is attached to the machine.

NOTE

- For more information on the Remote UI, see the *Remote UI Guide*.
- For instructions on configuring the Ethernet port, see the *Network Guide*.
- The default setting is 'On'.

1 Press (Additional Functions).

The Additional Functions menu appears.

2

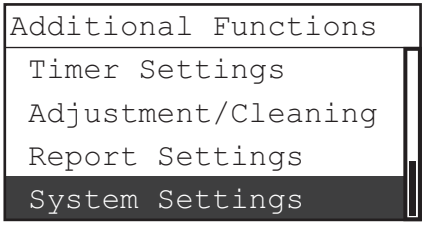

Use [▼] or [▲] to select <System Settings> → press [OK].

If the System Manager ID and System Password have already been set, enter the System Manager ID and System Password using ⓪ - ⑨ (numeric keys) → press ⓘⓓ (ID).

The System Settings menu appears.

3

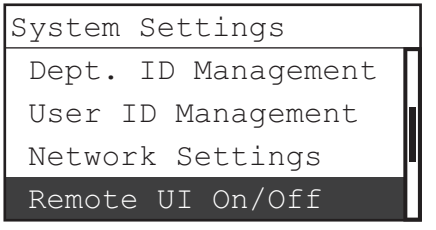

Use [▼] or [▲] to select <Remote UI On/Off> → press [OK].

The Remote UI On/Off menu appears.

4

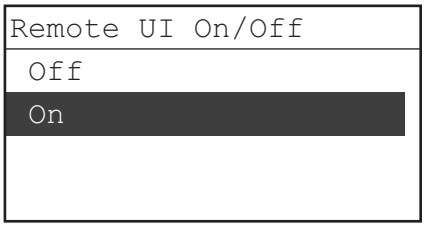

Use [▼] or [▲] to select <Off> or <On> → press [OK].

Details of each item are as follows:

<Off>
Settings cannot be specified and the machine cannot be operated through the Remote UI.

<On>
Settings can be specified and the machine can be operated through the Remote UI.

The selected mode is set.

5 **Press (Reset) to return to the Standby display.**

6 **Restart the machine.**

Turn OFF the machine, wait at least 10 seconds, and then turn it ON.

NOTE

The Remote UI is enabled only after you restart the machine. For instructions on how to turn the machine ON and OFF, see “How to Turn ON the Main Power,” on p. 1-14.

Displaying the Job Log

You can set the machine to display the log of copy and print jobs.

NOTE

The default setting is 'On'.

1 **Press (Additional Functions).**

The Additional Functions menu appears.

2

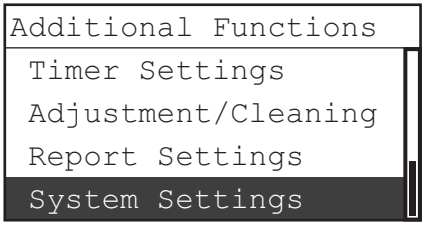

Use [▼] or [▲] to select <System Settings> → press [OK].

If the System Manager ID and System Password have already been set, enter the System Manager ID and System Password using 0 - 9 (numeric keys) → press ID (ID).

The System Settings menu appears.

3

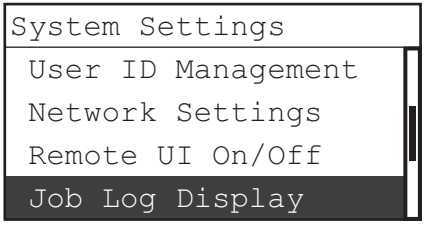

Use [▼] or [▲] to select <Job Log Display> → press [OK].

The Job Log Display menu appears.

4 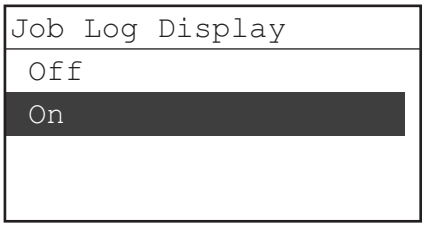

Use [▼] or [▲] to select <Off> or <On> → press [OK].

Details of each item are as follows:

<Off>
The Log of copy and print jobs is not displayed on the System Monitor screen.

<On>
The Log of copy and print jobs is displayed on the System Monitor screen.

The selected mode is set.

5 **Press (Reset) to return to the Standby display.**

Accepting Jobs through the USB Interface Port

The machine can accept jobs through the USB interface. If you want to use the USB interface to print from a computer, turn on the USB interface as described below.

NOTE

The default setting is 'On'.

1 **Press (Additional Functions).**

The Additional Functions menu appears.

2

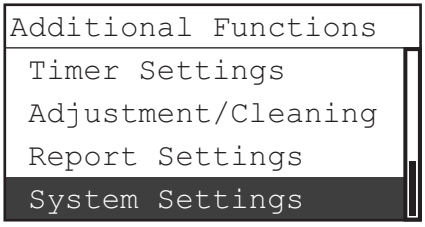

Use [▼] or [▲] to select <System Settings> → press [OK].

If the System Manager ID and System Password have already been set, enter the System Manager ID and System Password using ⓪ - ⑨ (numeric keys) → press ID (ID).

The System Settings menu appears.

3

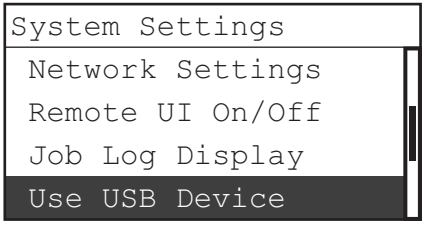

Use [▼] or [▲] to select <Use USB Device> → press [OK].

The Use USB Device menu appears.

4

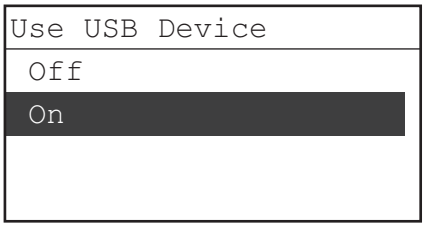

Use [▼] or [▲] to select <Off> or <On> → press [OK].

Details of each item are as follows:

<Off>
The machine does not accept jobs through the USB interface.

<On>
The machine accepts jobs through the USB interface.

The selected mode is set.

5 Restart the machine.

Turn OFF the machine, wait at least 10 seconds, and then turn it ON.

NOTE

For instructions on how to turn the machine ON and OFF, see “How to Turn ON the Main Power,” on p. 1-14.

Optional Equipment

5
CHAPTER

This chapter describes the uses of optional equipment, and their special functions.

System Configuration 5-2
Optional Equipment 5-2
Available Combination of Options 5-4
Feeder (DADF-P2) 5-5
Finisher-U2 5-6
Finishing Modes 5-7
Inner 2 Way Tray-E2 5-10
Cassette Feeding Module-J1/K1 5-11
Optional Accessory 5-11

System Configuration

This section provides you with illustrations of all the optional equipment that can be attached to the machine, and shows you examples of different system configurations.

For information on the complete range of optional equipment configurations, contact your local authorized Canon dealer.

Optional Equipment

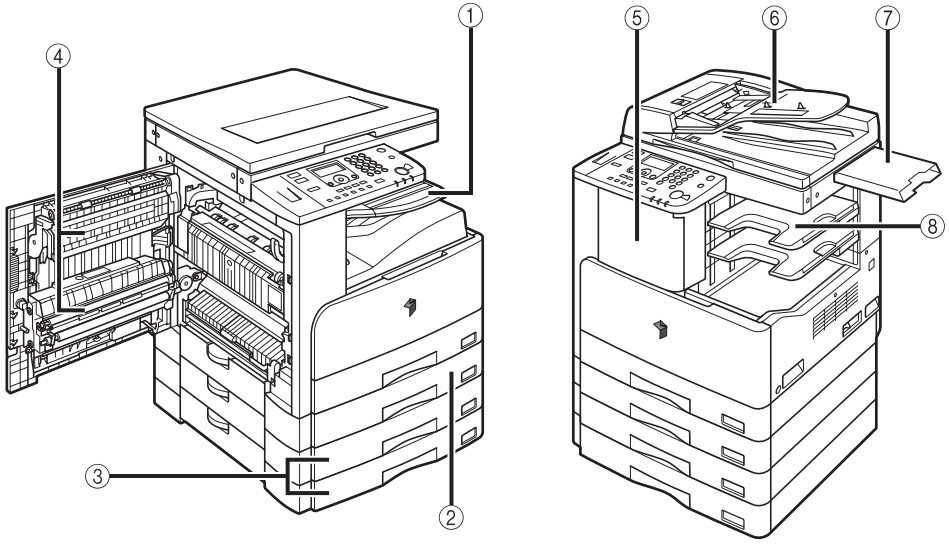

① **Inner 2 Way Tray-E2**

Attaching the Inner 2 Way Tray-E2 enables you to have two output trays.

② **Cassette Feeding Module-J1**

The Cassette Feeding Module-J1 provides an additional paper source for printing jobs. The paper drawer holds up to 250 sheets of paper (80 g/m^2).

③ **Cassette Feeding Module-K1**

The Cassette Feeding Module-K1 provides two additional sources of paper for printing jobs. Each paper drawer holds up to 250 sheets of paper (80 g/m^2).

④ **Duplex Unit-A1**

The Duplex Unit-A1 enables you to use the 2-sided mode for copying or printing.

⑤ **Finisher-U2**

The Finisher-U2 is equipped with the following features: Staple, Offset + Group, and Offset + Collate.

⑥ **Feeder (DADF-P2)**

Originals placed in the feeder are automatically fed sheet by sheet to the scanning area. The feeder also automatically turns over two-sided originals to make one- or two-sided copies.

⑦ **Document Tray-J1**

Located on the top right side of the machine, and can be used for originals waiting to be scanned, or that have already been scanned. You can also use the document tray for storing the manuals required for operating the machine.

⑧ **Additional Finisher Tray-C1**

The Additional Finisher Tray-C1 can be attached to the optional Finisher-U2 to provide an additional paper output tray.

NOTE

The optional Inner 2 Way Tray-E2 cannot be used with the optional Finisher-U2 and Additional Finisher Tray-C1.

Available Combination of Options

The table below lists the optional equipment for the machine, and describes use purpose and remarks on available combination of options.

Optional Equipment	Purpose	Remarks
Feeder (DADF-P2)	Scanning originals	The Feeder (DADF-P2) and the platen cover cannot be installed together. If only the platen cover is attached, some functions may be unavailable.
Finisher-U2	Finishing (Staple, Offset + Group, and Offset + Collate)	The Finisher-U2 cannot be used with the Inner 2 Way Tray-E2.
Additional Finisher Tray-C1	Additional Output Tray	The Finisher U2 is required. The Additional Finisher Tray-C1 cannot be used with the Inner 2 Way Tray-E2.
Inner 2 Way Tray-E2	Additional Output Tray	The Inner 2 Way Tray-E2 cannot be used with the Finisher-U2 or Additional Finisher Tray-C1.
Duplex Unit-A1	2-Sided Copying	The Feeder (DADF-P2) is also required when scanning two-sided originals.*
Cassette Feeding Module-J1 or -K1	Additional Paper Supply	–

* The Duplex Unit-A1 is not required when performing 2 to 1-Sided printing.

Feeder (DADF-P2)

Originals placed in the feeder are automatically fed sheet by sheet to the scanning area. The feeder also automatically turns over two-sided originals to make one- or two-sided copies.

CAUTION

Do not insert your fingers into the gaps around the original supply tray, as your fingers may get caught. Also, be careful not to drop objects, such as paper clips into the gaps, as doing so may cause damage to the machine or cause it to break down.

IMPORTANT

- When using the platen glass to copy or scan thick originals, such as books or magazines, do not press down hard on the feeder.
- Do not place any objects in the original output area. If the original output area is blocked, originals may get damaged, and printing may not be performed correctly.

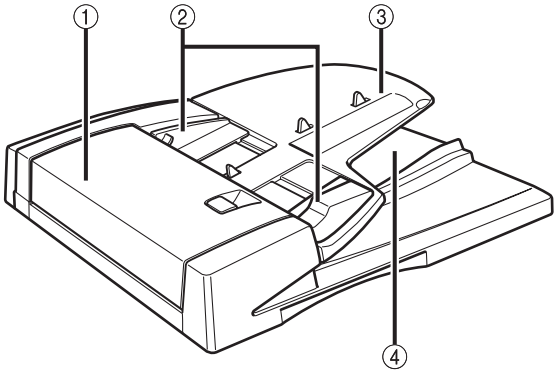

① **Feeder Cover**

Open this cover to remove jammed originals.

② **Slide Guides**

Adjust the slide guides to match the width of the originals.

③ **Original Supply Tray**

Originals placed here are automatically fed sheet by sheet to the scanning area. Place originals into this tray with the surface that you want to scan face up.

④ **Original Output Area**

Originals that have been scanned from the original supply tray are output to the original output area in the order that they are fed into the feeder.

Finisher-U2

The Finisher-U2 is equipped with the following finishing modes: Staple, Offset + Group, and Offset + Collate. (See “Finishing Modes,” on p. 5-7.)

If the optional Additional Finisher Tray-C1 is attached to the Finisher-U2, prints can be delivered to two different locations.

IMPORTANT

The Finisher-U2 cannot be installed with the optional Inner 2 Way Tray-E2.

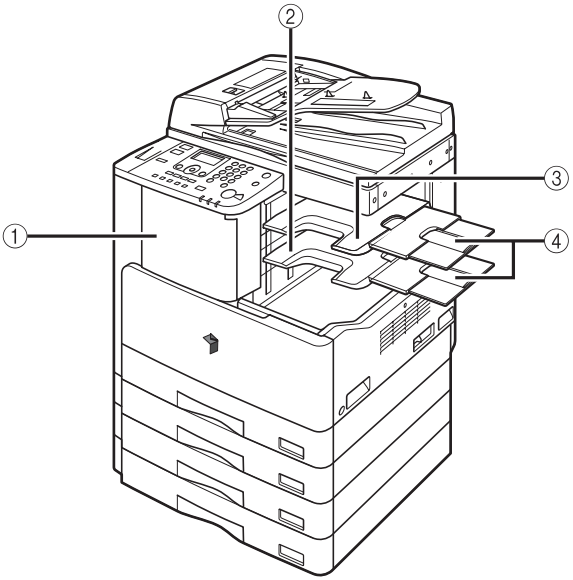

① Front Cover of the Finisher-U2

Open this cover to replace the staple cartridge in the stapler unit, or to clear a staple jam. For instructions on replacing the staple cartridge, see “Replacing the Staple Cartridge,” on p. 6-21. For instructions on clearing a staple jam, see “Clearing Staple Jams,” on p. 7-28.

② Output Tray

Prints are output to this tray.

③ Additional Finisher Tray-C1

The Additional Finisher Tray-C1 can be attached to the optional Finisher-U2 to provide an additional paper output tray.

④ Auxiliary Tray

If you are printing on large size paper, such as A3 or B4, pull out the auxiliary tray.

Finishing Modes

The Finisher-U2 is equipped with the following finishing modes: Staple, Offset + Group, and Offset + Collate.

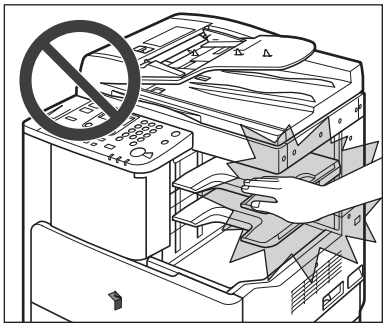

CAUTION

Do not place your hand in the following parts of the finisher, as this may result in personal injury:

- **Trays**
- **Stapler unit (where stapling is performed)**
- **Rollers**
- **Spaces between the trays and the main unit**

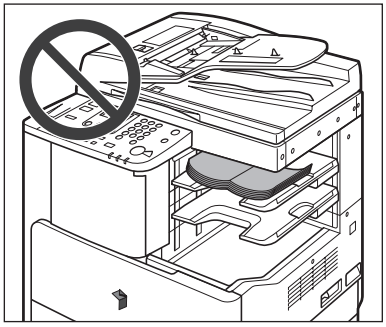

IMPORTANT

- Do not place anything other than output paper in the trays of the finisher, as this may damage the trays.
- Do not place anything under the trays of the finisher, as this may damage the trays.

NOTE

- The output trays move downward as the stack of paper that is output increases in quantity and thickness. Once the output trays have reached their stacking limit, printing stops temporarily. Remove all of the prints from the output trays, and printing resumes.
- For more information on the finishing modes, see Chapter 2, “Advanced Operations,“ in the *Copying Guide* or Chapter 1, “Using the Machine as a Printer,“ in the *UFR II Printer Guide*.

■ Staple Mode

The prints are automatically collated into sets arranged in page order and stapled. Prints are stapled in the following places:

- If an original is placed on the platen glass:

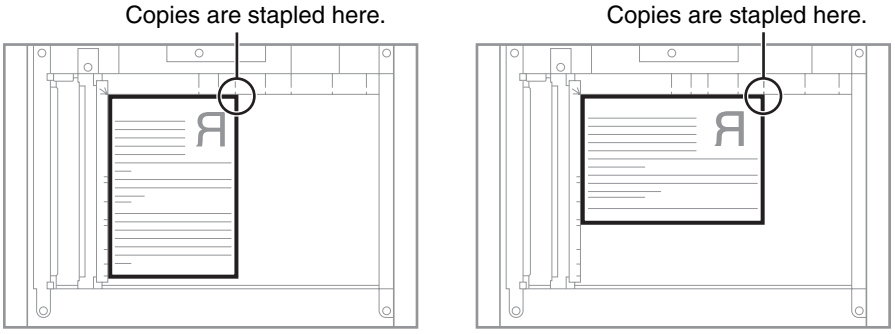

- If originals are placed in the optional feeder:

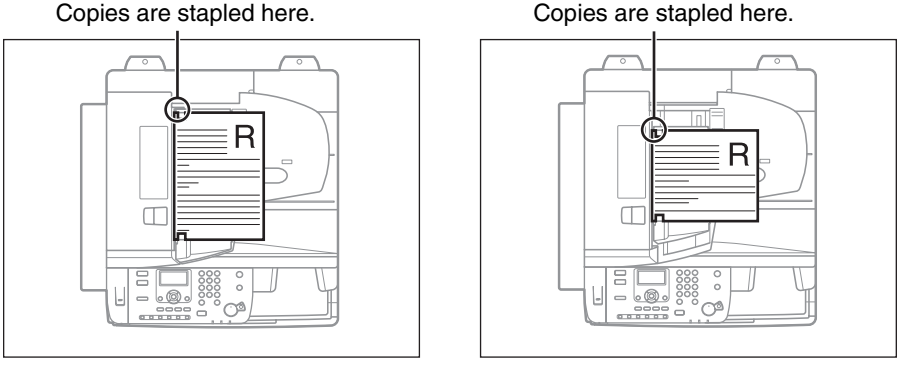

IMPORTANT

- If the Staple mode is set, the output tray moves downward as the stack of paper that is output increases in quantity and thickness. Once the output tray has reached its stacking limit, printing and stapling stop temporarily. Remove all of the stapled prints from the output trays, and printing and stapling resume.
- Only the following paper sizes can be stapled: A4, A4R, and A3.
- You cannot staple envelopes, transparencies, or labels.
- Do not pull copies or prints out of the output area while they are being stapled. Remove the copies or prints after they are output to the output trays.

NOTE

- The maximum number of sheets, including cover sheets, that can be stapled together is as follows (only 64 g/m^2 to 80 g/m^2 paper can be used for the main document, and 64 to 128 g/m^2 paper can be used for the cover page):
  - A4
    50 sheets (64 g/m^2 to 80 g/m^2)
  - A4R and A3
    30 sheets (64 g/m^2 to 128 g/m^2)

- If the message <Out of staples/Replace staple cart.> appears on the LCD display, the machine is out of staples. Prepare a new staple cartridge for replacement. (See "Replacing the Staple Cartridge," on p. 6-21.)

■ Offset + Group Mode

The prints are slightly offset vertically in the output tray as follows with the copies of the same original page grouped together.

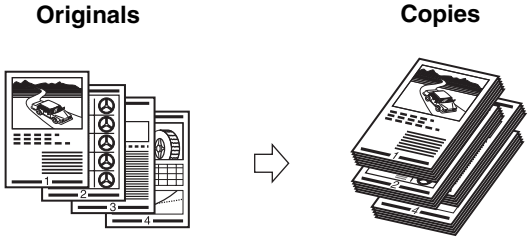

IMPORTANT

You can offset A4, A4R, and A3 paper.

■ Offset + Collate Mode

The prints are slightly offset vertically in the output tray as follows with the copies automatically collated into sets arranged in page order.

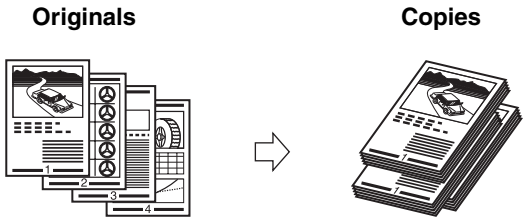

IMPORTANT

You can offset A4, A4R, and A3 paper.

Inner 2 Way Tray-E2

If you attach the Inner 2 Way Tray-E2 to the machine, prints can be delivered to both the main tray and the Inner 2 Way Tray-E2.

IMPORTANT

If the optional Finisher-U2 is attached, the Inner 2 Way Tray-E2 cannot be attached.

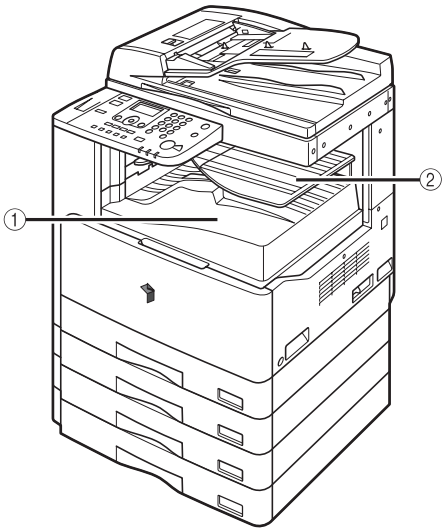

① **Main Output Tray (Tray A)**
Prints are output to this tray.

② **Inner 2 Way Tray (Tray B)**
Prints are output to this tray.

Cassette Feeding Module-J1/K1

If you attach the Cassette Feeding Module-J1, you have one additional paper source for print jobs. If you attach the Cassette Feeding Module-K1 to the machine, you have two additional paper sources for print jobs. Each cassette holds up to 250 sheets (80 g/m^2) of A4, A4R, A3, or A5 paper.

Cassette Feeding Module-J1

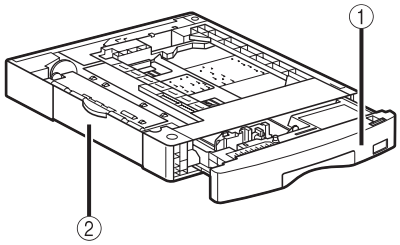

Cassette Feeding Module-K1

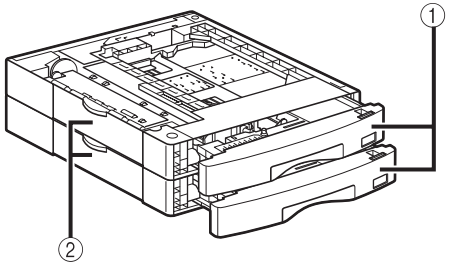

① **Paper Drawers**
Each paper drawer holds up to 250 sheets of paper (80 g/m^2).

② **Paper Drawer's Left Cover**
Open this cover to remove jammed paper.

Optional Accessory

■ **FL Cassette-AC1**
This drawer can be adjusted to hold various paper sizes. (See "Adjusting a Paper Drawer to Hold a Different Paper Size," on p. 6-6.)

- Available Locations: Paper drawers 1, 2, 3, or 4
- Available Paper Sizes: A4, A4R, A3, or A5

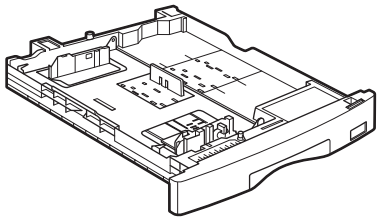

Routine Maintenance

6
CHAPTER

This chapter describes how to load paper, perform routine cleaning operations, and replace consumables, such as toner and staple cartridges.

Paper Drawers 6-2
Loading Paper 6-2
Adjusting a Paper Drawer to Hold a Different Paper Size 6-6
Replacing the Toner 6-10
Drum Unit 6-16
Replacing the Drum Unit 6-16
Affixing the Counter Label for Service Technician 6-20
Replacing the Staple Cartridge 6-21
Routine Cleaning 6-24
Platen Glass and Cover 6-25
Manual Feeder Cleaning 6-26
Automatic Feeder Cleaning 6-29
Transcription Roller Cleaning 6-30
Drum Cleaning 6-31
Fixing Unit Cleaning 6-31
Offset Roller Cleaning 6-36
Consumables 6-37
Paper Stock 6-37
Toner 6-38
Genuine Supplies 6-39

Paper Drawers

This section describes how to load paper into the paper drawers.

NOTE

- The following paper sizes can be loaded in Paper Drawers 1, 2, 3, and 4:
  - A4, A4R, A3, or A5
- Paper Drawer 2 can be added by attaching the optional Cassette Feeding Module-J1 or -K1.
- Paper Drawer 3 (and 4) can be added by attaching the optional Cassette Feeding Module-K1.
- For more information on available paper stock which can be loaded in the paper drawers, see “Available Paper Stock,” on p. 8-17.

Loading Paper

A message prompting you to load paper appears on the LCD display, and the error indicator flashes red when:

- paper runs out in any of the paper drawers.
- a paper drawer is not fully inserted into the machine. Make sure that the paper drawer is properly set in place.
- a paper drawer is opened even if the paper is loaded.

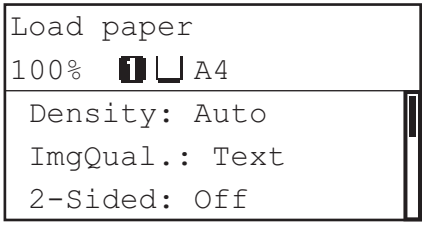

CAUTION

Take care not to cut your hands on the edges of the paper when loading it into the machine.

IMPORTANT

- Do not load nonstandard paper sizes into the paper drawers.
- Do not load the following types of paper into the paper drawers, as this may cause paper jams:
  - Severely curled or wrinkled paper
  - Lightweight straw paper: less than approximately 64 g/m^2
  - Transparencies
  - Envelopes
  - Labels

- Paper on which color images have been copied (Do not copy on the reverse side of this paper either.)
- Paper which has been printed on using a thermal transfer printer (Do not print on the reverse side of this paper either.)

- Fan the stack of paper well before loading it, and align the edges of the paper stack on a flat surface.
- Never place paper or any other items in the empty part of the drawer next to the paper stack. Doing so may cause paper jams.

NOTE

- If a message prompting you to load paper appears during printing, the remaining prints are automatically made after you load the correct paper. If you select another paper drawer, the remaining prints are made after you press [OK].
- To cancel printing, press (Stop).

1

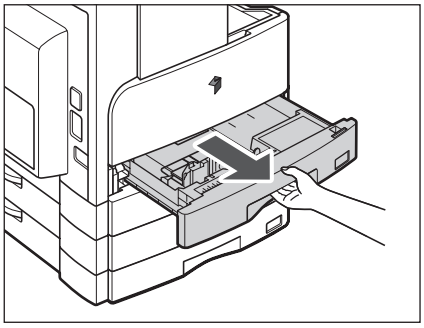

Grip the handle of the paper drawer and pull out the paper drawer until it stops.

2

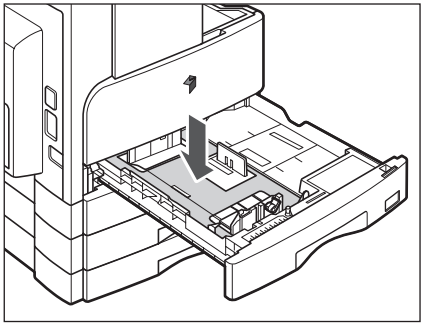

Push down the metal plate to lock it.

3

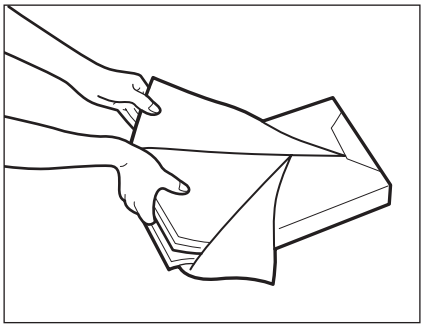

Open a package of paper, and take out the paper stack from the package.

CAUTION

Take care not to cut your hands on the edges of the paper when loading it into the machine.

IMPORTANT

Rewrap any remaining paper in its original package, and store it in a dry place, away from direct sunlight.

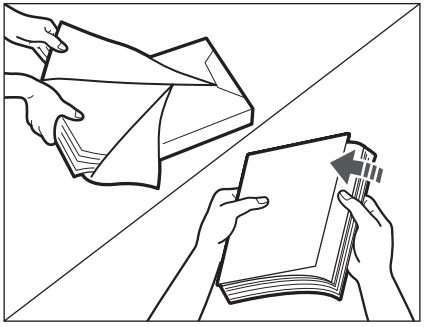

NOTE

- For high-quality printouts, use paper recommended by Canon.
- Before loading paper, always fan the sheets several times, and align the edges to facilitate feeding.

4

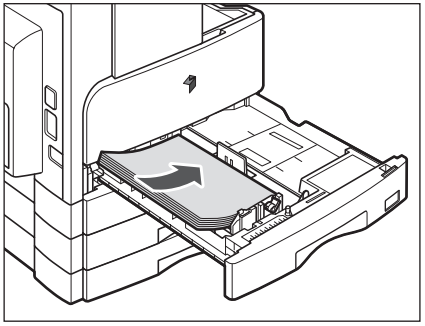

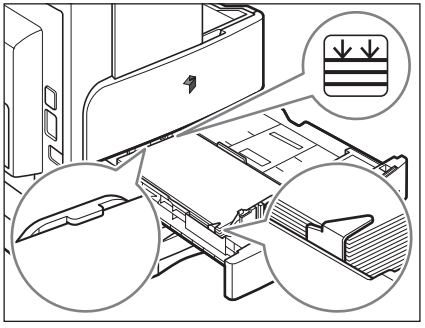

Load the paper stack into the paper drawer.

Even out the edges of the paper stack. Load the paper stack against the end guide of the paper drawer.

When loading paper into the paper drawer for the first time, set the size plate and the paper-size detecting lever for the paper being loaded. (See “Adjusting a Paper Drawer to Hold a Different Paper Size,” on p. 6-6.)

When loading paper into the paper drawer, make sure that the paper size setting of the paper drawer matches the size of the paper that is being loaded. (See “Adjusting a Paper Drawer to Hold a Different Paper Size,” on p. 6-6.)

IMPORTANT

- Rolled or curled paper must be straightened out prior to use.
- Make sure that the height of the paper stack does not exceed the loading limit mark ( ) at the back of the paper drawer and the corners are below the paper size guide clips.
- Make sure that the paper-size detecting lever is set correctly. If the lever is set on a wrong position, paper jams or dirty prints may occur, or the inside of the machine may get dirty.

NOTE

- Each paper drawer holds about 250 sheets of paper (80 g/m^2).
- If there are instructions on the package of paper about which side of the paper to load, follow those instructions.
- When the paper is loaded into the paper drawer, the side facing up is the one printed on.
- If problems occur, such as poor print quality or paper jams, try turning the paper stack over, and reload it.
- For more information on the print direction of preprinted paper (paper which has logos or patterns already printed on it), see “Relationship between Original Orientation and Preprinted Paper Output Chart,” on p. 8-14.

5

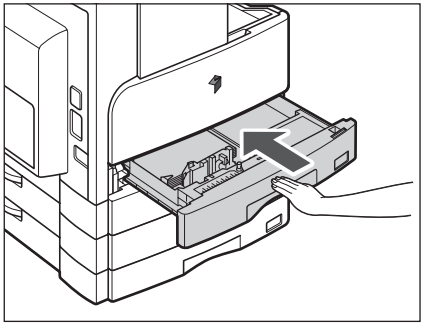

Gently push the paper drawer back into the machine until it clicks into space in the closed position.

CAUTION

When returning the paper drawer to its original position, be careful not to get your fingers caught, as this may result in personal injury.

IMPORTANT

You will not be able to make copies or prints if you load paper that exceeds the loading limit, or if the paper drawer is not completely pushed into the machine. Always check that the paper drawers are in place, and that the paper does not exceed the loading limit.

NOTE

If paper runs out during copying or printing, load a new paper stack, and follow the instructions on the LCD display. The machine automatically restarts, and produces the remaining copies or prints.

Adjusting a Paper Drawer to Hold a Different Paper Size

If you want to change the size of paper in a paper drawer, follow the procedure described below to adjust the paper drawer guides.

NOTE

Please contact your Canon service representative about the settings for U1, U2, and U3 paper.

1

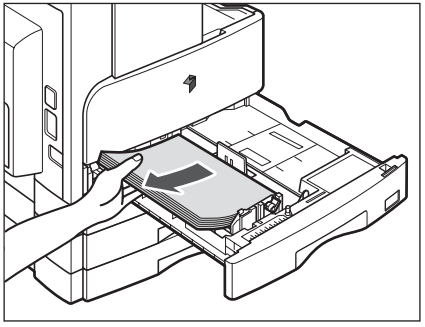

Pull out the paper drawer, and remove all the loaded paper.

2

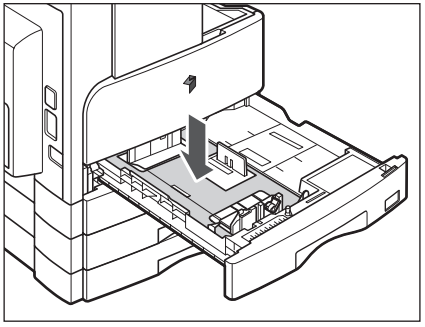

Push down the metal plate to lock it.

3

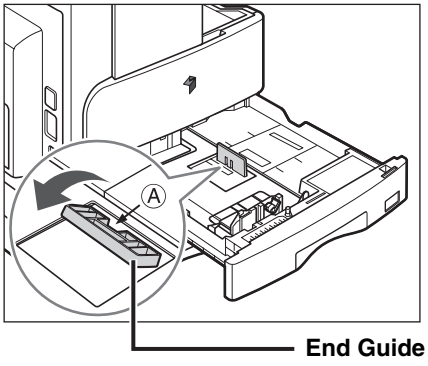

Detach the end guide and reattach it to the slots aligned with the mark indicating the desired paper size.

Detach the end guide by pressing down and forward. Align the end guide with the mark indicating the desired paper size. Reattach the end guide by tilting it forward and inserting the tabs at both ends into the slots. Then push the end guide up to return it to its original vertical, upright position.

NOTE

Attach the end guide while pressing down the point indicated with 'A'.

4 **Lift up the lock lever on the front slide guide, and slide it backwards or forwards to align it with the groove marked with the desired paper size.**

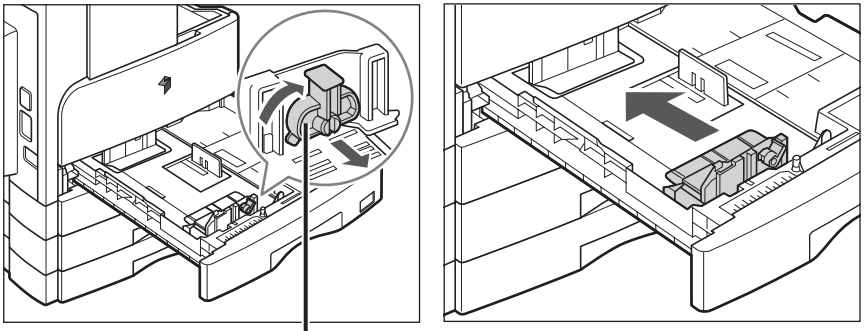

5

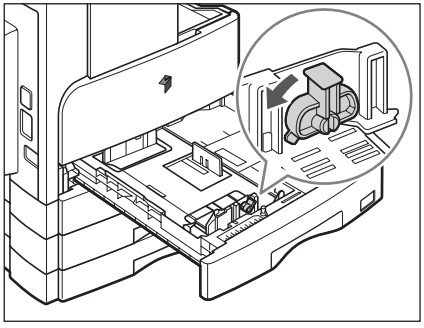

Lower the lock lever to lock the front slide guide into place.

IMPORTANT

Be sure to set the lock lever correctly. If the lock lever is positioned incorrectly for the type of paper loaded in the paper drawer, the wrong paper type will be shown on the LCD display. This may also cause paper jams, dirty prints, or make the inside of the machine dirty.

6

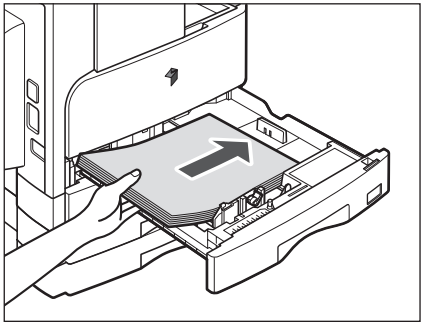

Load the appropriate size paper into the paper drawer.

CAUTION

Take care not to cut your hands on the edges of the paper when loading it into the machine.

7 Move the paper size detecting lever on the left side of the paper drawer, so that the arrow points to the paper size being loaded.

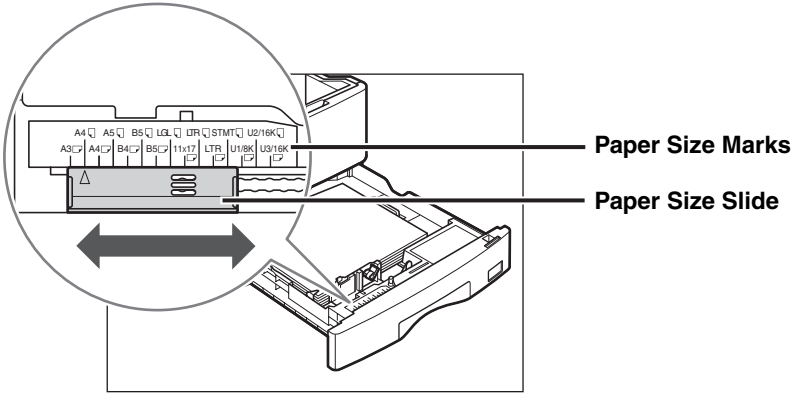

IMPORTANT

Make sure that the paper size detecting lever is set correctly. If the lever is positioned incorrectly to the size of paper loaded in the paper drawer, the wrong paper size will be shown on the LCD display. This may also cause paper jams, dirty prints, or make the inside of the machine dirty.

NOTE

<A4R> displayed on the LCD display indicates the paper size label or punch mark of 'A4 ▭' on the paper drawers.

8 Stick the appropriate paper size label on the paper size plate.

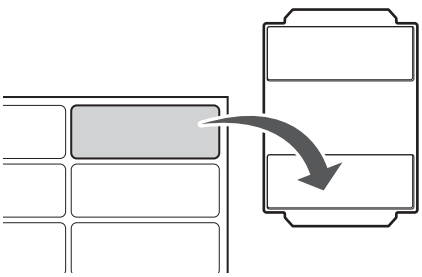

9 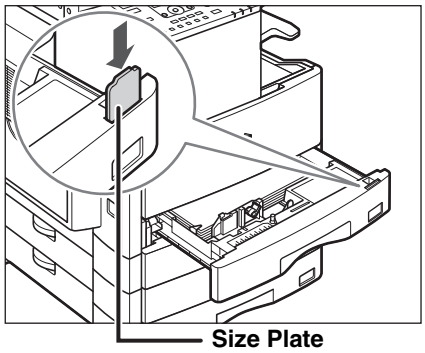

Change the paper size plate to match the new paper size.

10 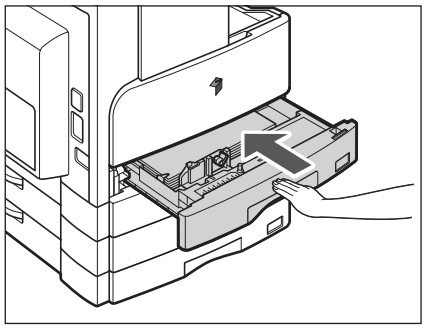

Gently push the paper drawer back into the machine until it clicks into place in the closed position.

CAUTION

When returning the paper drawer to its original position, be careful not to get your fingers caught, as this may result in personal injury.

Replacing the Toner

When there is only a small amount of toner remaining in the machine, the following message blinks on the LCD display. You may continue printing, however, it is highly recommended that you prepare a new toner cartridge before the toner has completely run out.

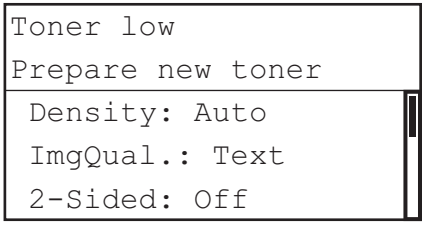

When prints can no longer be made as toner runs out completely, the following display appears on the LCD display. Follow the procedure described below to help you replace the toner cartridge.

NOTE

For detailed information on the displays showing the instructions on replacing the toner or staples, clearing the paper or staple jams, see “Clearing Paper Jams with On-Screen Instructions,” on p. 7-3.

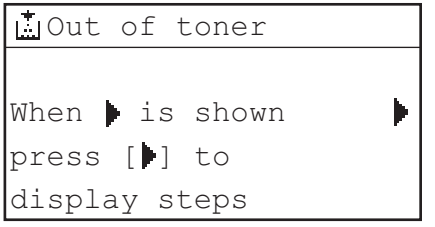

WARNING

- **Do not burn or throw used toner cartridges into open flames, as this may cause the toner remaining inside the cartridges to ignite, resulting in burns or a fire.**
- **Do not store toner cartridges or paper in places exposed to open flames, as this may cause the toner or paper to ignite, resulting in burns or a fire.**
- **If you accidentally spill or scatter toner, carefully gather the toner particles together or wipe them up with a soft, damp cloth in a way that prevents inhalation.**
  Never use a vacuum cleaner that does not have safeguards against dust explosions to clean up spilled toner. Doing so may cause a malfunction in the vacuum cleaner, or result in a dust explosion due to static discharge.

CAUTION

- **Keep toner out of the reach of small children. If toner is ingested, consult a physician immediately.**
- **Take care not to allow toner to come into contact with your hands or clothing. If toner gets onto your hands or clothing, wash it off immediately with cold water. Washing it off with warm water may set the toner permanently, making the stains impossible to remove.**
- **When discarding used toner cartridges, put the cartridges in a bag to prevent the toner remaining inside the cartridges from scattering, and dispose of them in a location away from open flames.**

IMPORTANT

- Use only toner cartridges intended for use with this machine.
- Do not replace toner cartridges until the message prompting you to do so appears.
- Do not attempt to replace the toner cartridge while the machine is printing.

NOTE

- It is recommended that you replace the toner cartridge soon after the message <Toner low/Prepare new toner> appears.
- Printing stops if the toner runs out during a print job. The machine will resume printing the remaining pages automatically after you replace the toner cartridge.

1



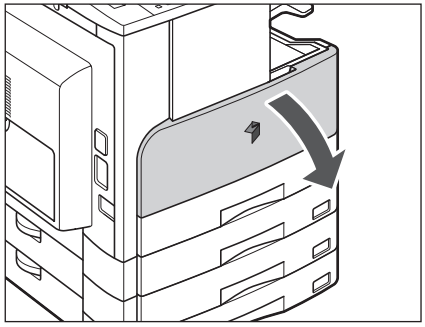

Open the front cover.

NOTE

The screen shown left is a capture from the On-Screen Instruction. For details, see “Clearing Paper Jams with On-Screen Instructions,” on p. 7-3.

2

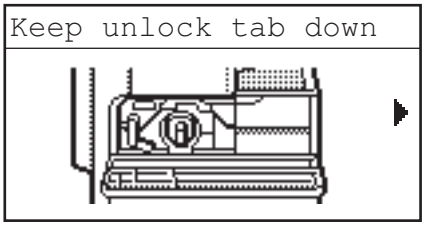

While pressing the unlock tab on the grip, turn the toner cartridge in the direction of the arrow (clockwise).

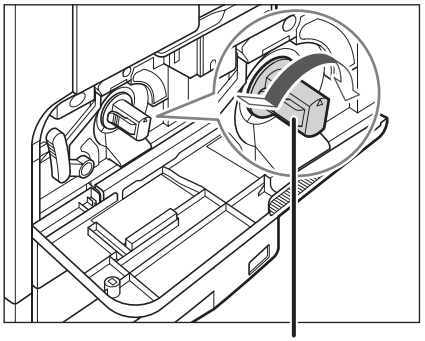

3

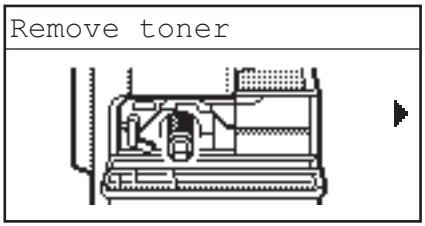

Pressing the unlock tab, pull out the toner cartridge.

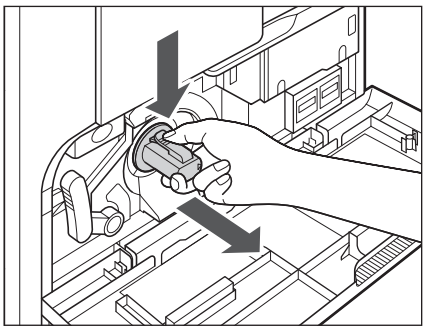

4

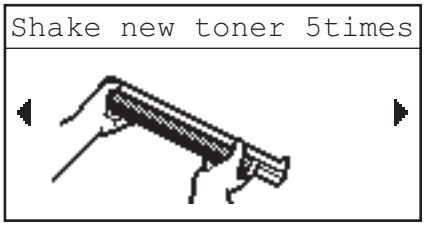

Shake the new toner cartridge back and forth (five or six times) to distribute the toner evenly inside the cartridge.

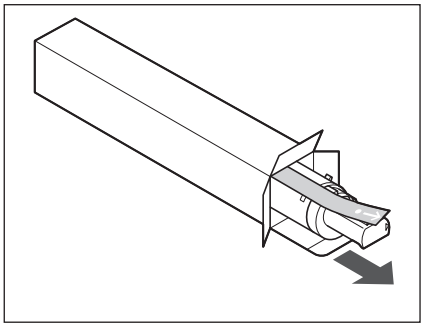

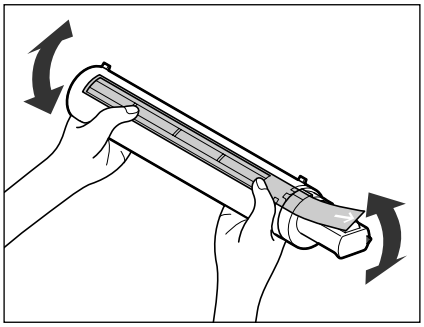

WARNING

Do not burn or throw used toner cartridges into open flames, as this may cause the toner remaining inside the cartridges to ignite, resulting in burns or a fire.

IMPORTANT

If the toner is not distributed evenly inside the cartridge, the outputs may be printed uneven.

5

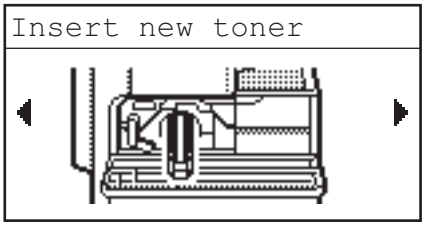

Make sure that the side of the cartridge with the label is facing up, and push the new toner cartridge into the machine as far as it will go.

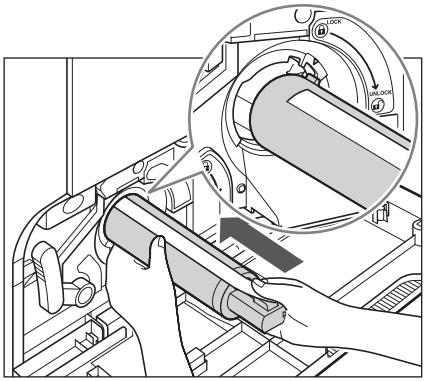

Support the new toner cartridge with one hand from underneath, while pushing it into the machine with the other hand.

6

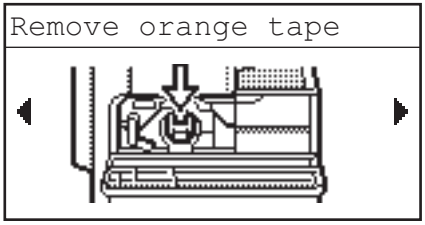

Hold the toner cartridge in place with one hand, and then remove the protective seal by pulling it straight out with the other hand.

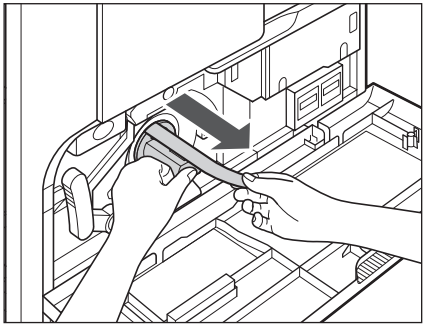

IMPORTANT

- Pull out the seal slowly, otherwise the toner may scatter and soil your clothes or skin.
- Make sure that you pull out the seal completely, otherwise print errors may occur.
- Make sure that you pull the seal straight out. Pulling the seal upwards or downwards may break the seal. If the seal breaks inside the toner cartridge and cannot be removed completely, the toner cartridge cannot be used.
- Throw away the seal after removing it from the toner cartridge.

7

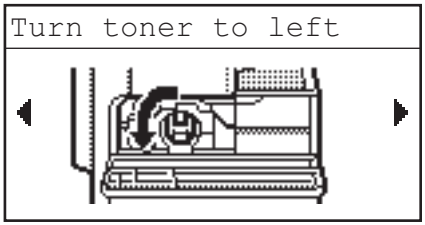

While pushing in the unlock tab, turn the toner cartridge in the direction of the arrow (counterclockwise).

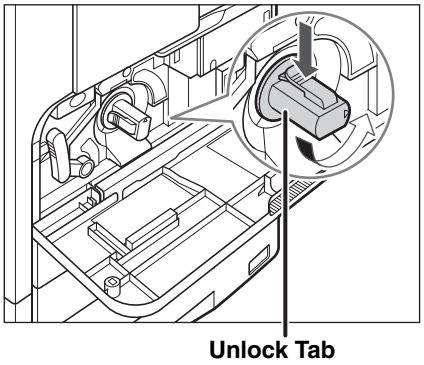

IMPORTANT

Turn the toner cartridge fully until it locks into place.

8



Close the front cover.

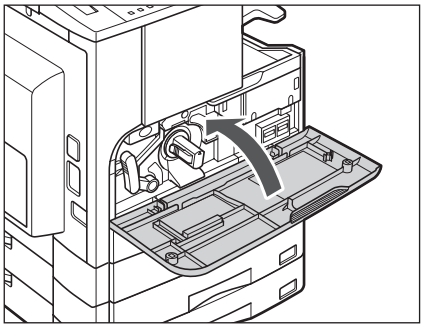

CAUTION

When closing the front cover, be careful not to get your fingers caught, as this may result in personal injury.

IMPORTANT

Make sure that you clean the fixing unit every time you replace the toner cartridge. (See “Fixing Unit Cleaning,” on p. 6-31.)

Drum Unit

When the drum unit is full of waste toner, the message <Waste toner full/Replace the drum> appears on the LCD display.

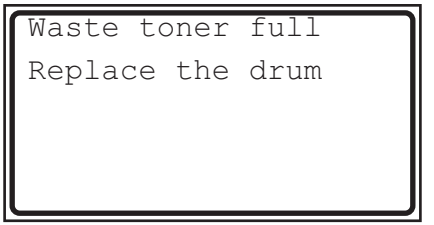

You cannot continue printing after the message appeared. Follow the procedure below to replace the drum unit.

WARNING

Do not burn or throw a used drum unit into open flames, as this may ignite the toner remaining inside the unit, and result in burns or a fire.

IMPORTANT

If you use the machine without inserting the drum unit, the message <Drum is not set/ Insert the drum> appears on the LCD display. In this case, turn OFF the main power, and install the drum unit into the machine.

Replacing the Drum Unit

1 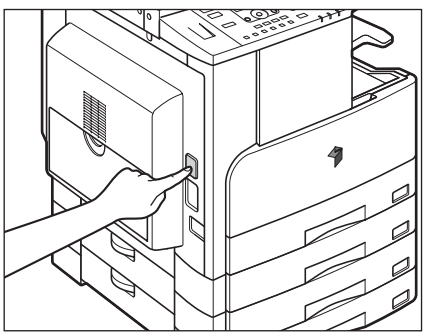

Press the button on the left cover of the main unit, and open the left cover.

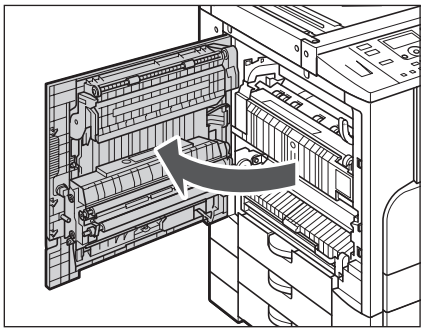

IMPORTANT

To avoid damage to the drum unit, always open the left cover wider than 50 mm.

2

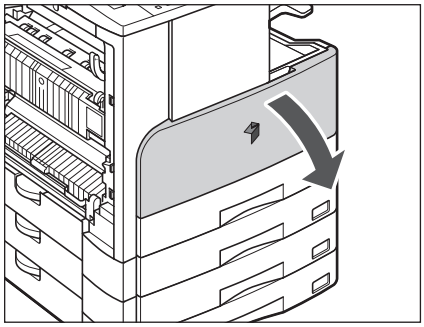

Open the front cover.

3

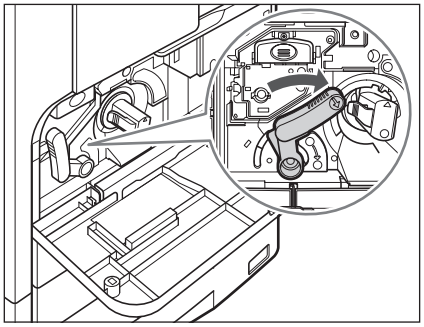

Turn the unlock lever to its horizontal position.

4

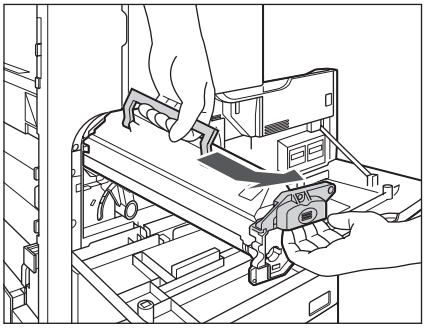

While gripping the handle of the drum unit, pull the unit out slightly upward.

5

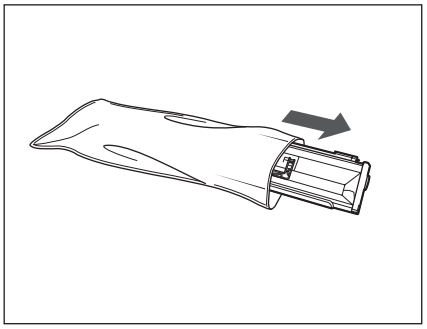

Take the new drum unit out of the package.

IMPORTANT
Do not remove the protective cover before attaching the drum unit to the machine.

6

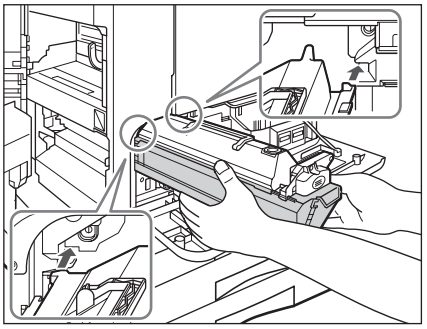

Hold the protective cover of the drum unit, and align it with the slots inside the main unit.

7

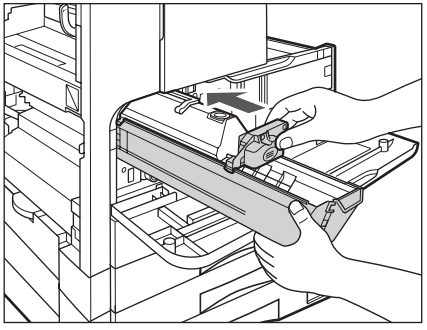

While holding the protective cover, insert the drum unit.

IMPORTANT
Be careful not to touch the blue-green part of the drum.

8

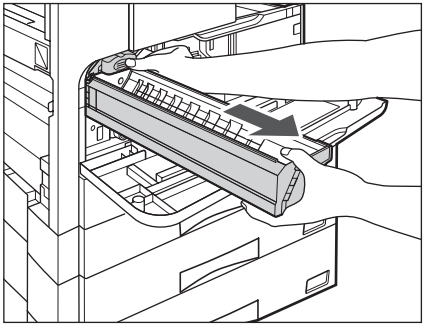

Remove the protective cover of the drum unit.

9

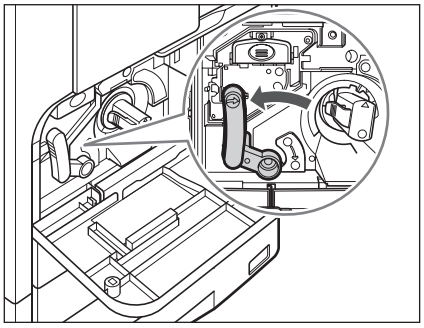

Turn the unlock lever to its vertical position.

10

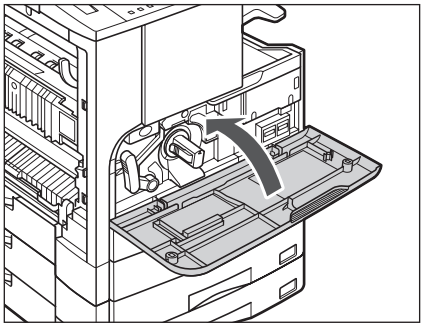

Close the front cover.

CAUTION

When closing the front cover, be careful not to get your fingers caught, as this may result in personal injury.

11

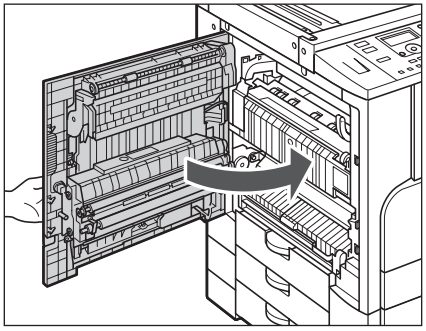

Place your hand where the hand symbol (☜) is located on the left cover of the main unit, and then gently close the left cover until it clicks into place in the closed position.

CAUTION

When closing the left cover, be careful not to get your fingers caught, as this may result in personal injury.

Affixing the Counter Label for Service Technician

1 **Open the front cover and check the counters located on the right side.**

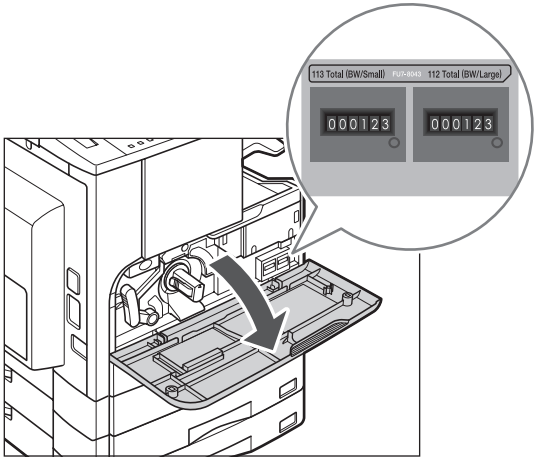

2 **Enter the date and counter value in the drum counter label.**

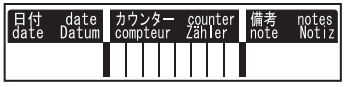

3 **Affix the counter label on the drum unit.**

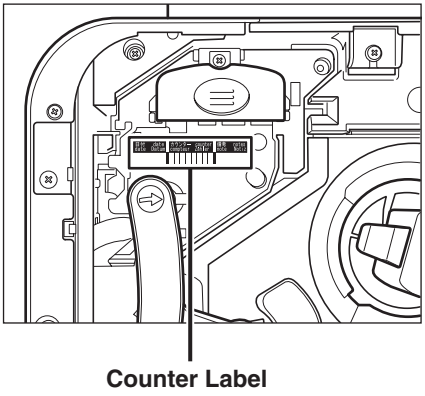

Counter Label

4 **Close the front cover.**

Replacing the Staple Cartridge

When the optional Finisher-U2 runs out of staples and the staple cartridge needs replacing, the following message appears on the standby display. Follow the procedure below to replace the staple cartridge.

```
Out of staples
Replace staple cart.
 Density: Auto
 ImgQual.: Text
 2-Sided: Off
```

NOTE

We recommend that you order staple cartridges from your local authorized Canon dealer before your stock runs out.

1

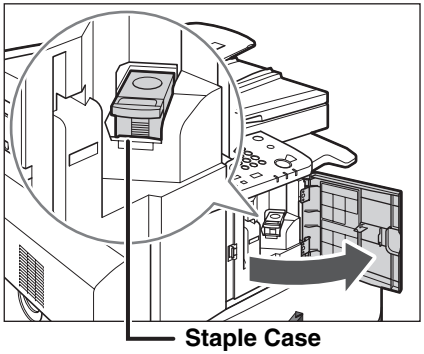

Open the front cover of the finisher.

2

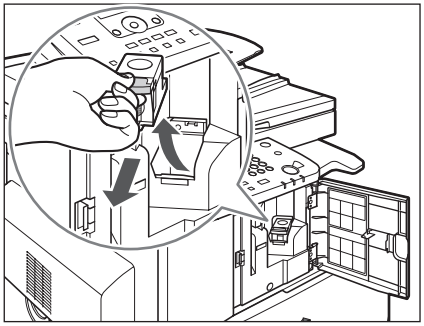

Lift and pull out the staple case, holding it by its green tab.

3 Press the area indicated by PUSH, and then pull out the empty staple cartridge.

Hold the staple case, as shown below, and pull out the staple cartridge.

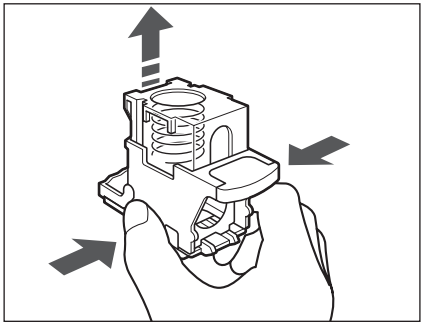

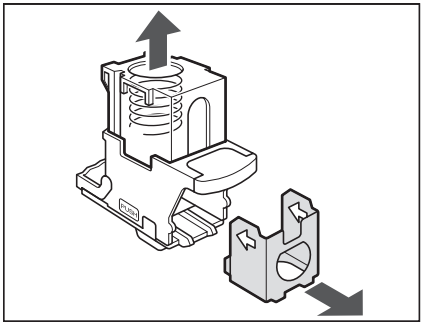

4 Insert the new staple cartridge.

Press the spring-loaded case down until it clicks into place.

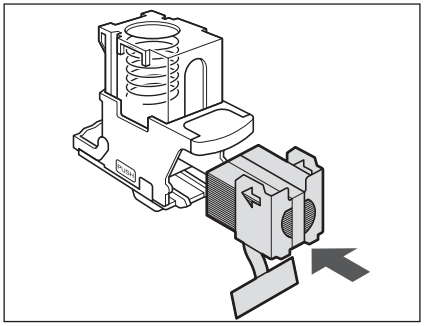

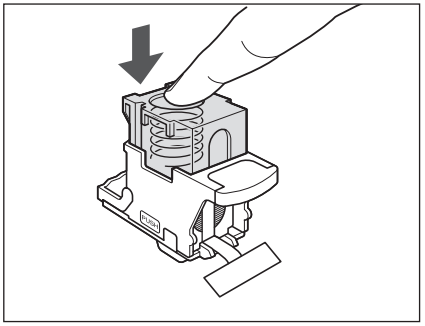

IMPORTANT

- Use only staple cartridges designed for use with this machine.
- Do not remove the seal that holds the staples together before you place the staple cartridge into the staple case.

NOTE

Only one staple cartridge can be inserted at a time.

5

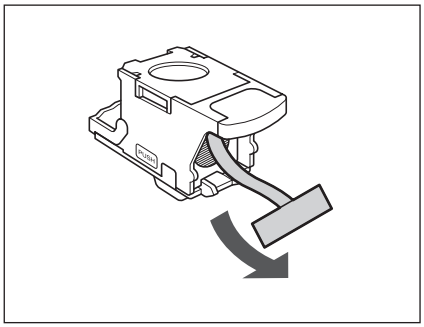

Remove the seal holding the staples together, by pulling it straight out, and then down.

IMPORTANT

Make sure that you pull the seal straight out, and then down. If you pull it out at an angle, it may tear.

6

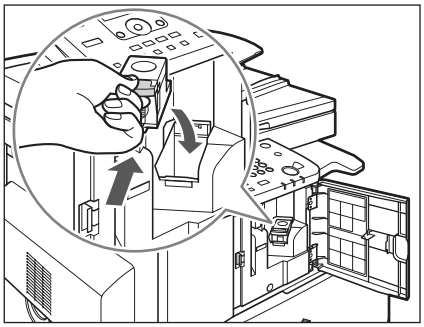

Gently push the staple case into the finisher, until it is securely in place.

7

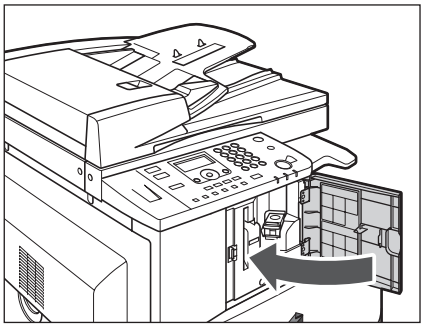

Close the front cover of the finisher.

CAUTION

When closing the front cover of the finisher, be careful not to get your fingers caught, as this may result in personal injury.

NOTE

If there are no staples ready for stapling after the cover is closed, the stapler unit automatically performs a “dry” stapling operation to reposition the staples.

Routine Cleaning

If the original is not copied clearly, clean the following parts of the machine.

- Platen glass
- Underside of the feeder/platen cover
- Feeder scanning area and rollers

For high-quality printouts, we recommend that you clean these parts regularly.

WARNING

- **When cleaning the machine, first turn OFF the main power switch, then disconnect the power cord. Failure to observe these steps may result in a fire or electrical shock.**
- **Do not use alcohol, benzene, paint thinner, or other solvents for cleaning. Doing so may damage the plastic parts.**
- **Disconnect the power cord from the power outlet regularly, and clean the area around the base of the power plug's metal pins and the power outlet with a dry cloth to ensure that all dust and grime is removed. If the power cord is connected for a long period of time in a damp, dusty, or smoky location, dust can build up around the power plug and become damp. This may cause a short circuit and result in a fire.**

IMPORTANT

- Do not dampen the cloth too much, as excess water may damage the machine.
- If the main power switch is turned OFF, all jobs waiting in the print queue will be erased.

Platen Glass and Cover

Clean the platen glass and the underside of the feeder/platen cover following the procedure below.

WARNING

When cleaning the machine, first turn OFF the main power switch and disconnect the power cord. Failure to observe these steps may result in a fire or electrical shock.

IMPORTANT

If the platen glass or the underside of the feeder/platen cover is dirty, the original may not be scanned clearly.

1 Clean the platen glass and the underside of the feeder/platen cover with a cloth dampened with water, and wipe them with a soft and dry cloth.

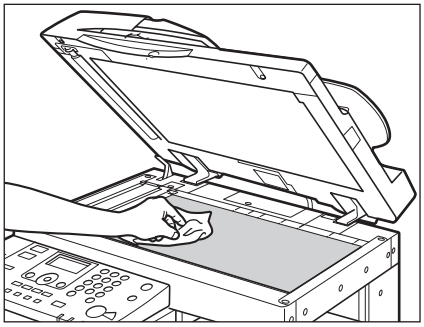

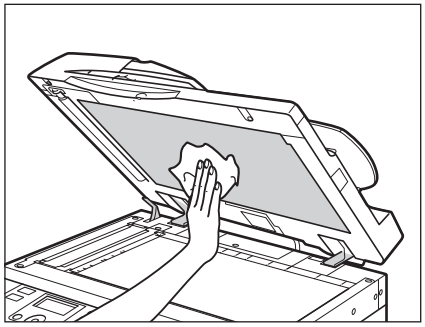

IMPORTANT

Do not dampen the cloth too much, as excess water may damage the machine.

Manual Feeder Cleaning

If your originals have black streaks or appear dirty after copying them using the feeder, this may be caused by pencil writing rubbing off the originals and onto the roller. Perform this feeder cleaning procedure to clean the feeder scanning area, film, and roller.

WARNING

When cleaning the machine, first turn OFF the main power switch and disconnect the power cord. Failure to observe these steps may result in a fire or electrical shock.

IMPORTANT

- Do not dampen the cloth too much, as excess water may damage the machine.
- If the feeder scanning area is dirty, it may result in a paper jam or smudged or dirty prints.
- Clean the roller while spinning it with your hand.

NOTE

This procedure is necessary only if the optional feeder (DADF-P2) is attached.

1 **Open the feeder cover.**

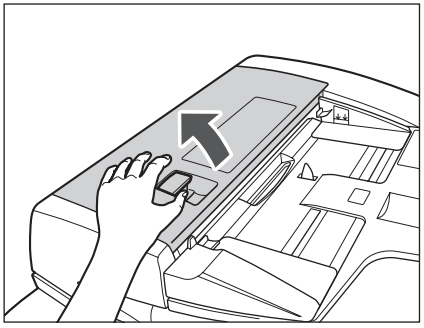

2 **Clean the rollers (a total of three places) inside the feeder cover with a cloth dampened with water. Then wipe the area with a soft, dry cloth.**

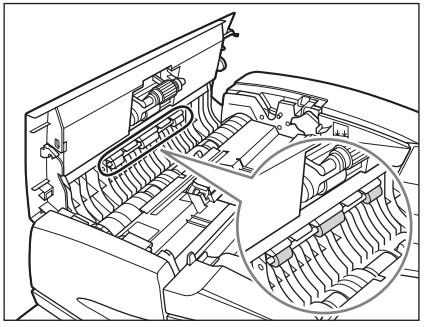

3

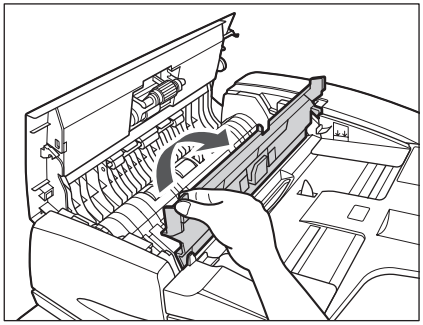

Open the inner cover, holding it by its front tab.

4

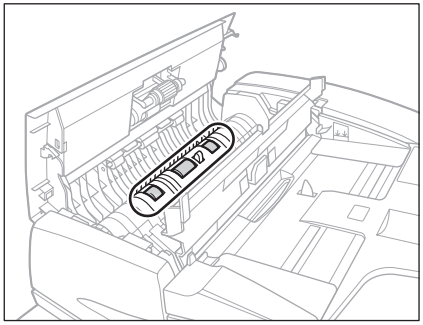

Clean the rollers (a total of three places) inside the inner cover with a cloth dampened with water. Then wipe the area with a soft, dry cloth.

5

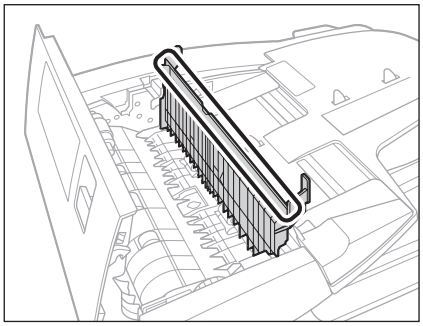

Clean the transparent plastic part of the inner cover with a cloth dampened with water. Then wipe the area with a soft, dry cloth.

6

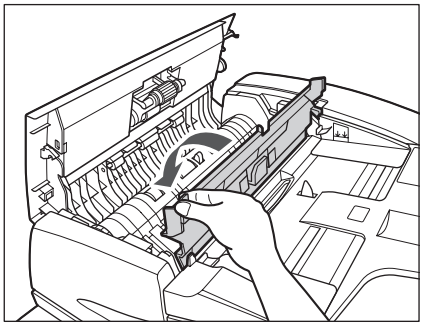

Close the inner cover.

CAUTION

When closing the inner cover, be careful not to get your fingers caught, as this may result in personal injury.

7 Close the feeder cover.

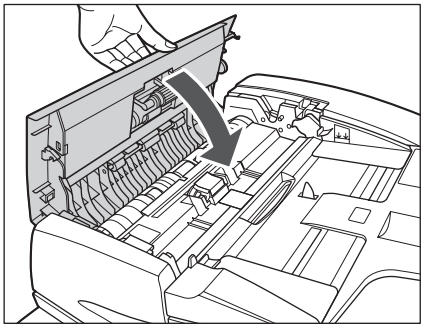

CAUTION

When closing the feeder cover, be careful not to get your fingers caught, as this may result in personal injury.

8 Lift the feeder.

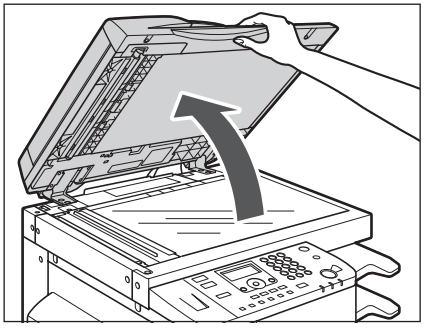

9 Clean the feeder scanning area (the left side of the platen glass) and the document feeding roller, with a cloth dampened with water. Then, wipe the area with a soft, dry cloth.

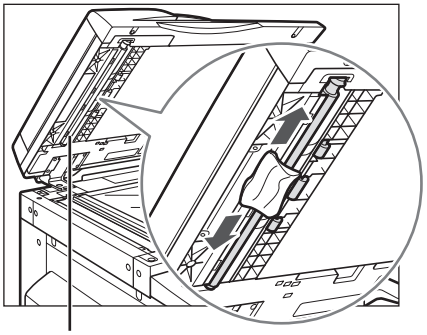

Document Feeding Roller

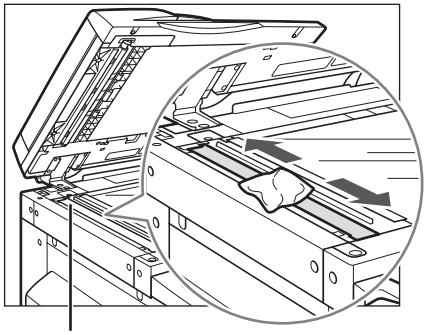

Feeder Scanning Area

10 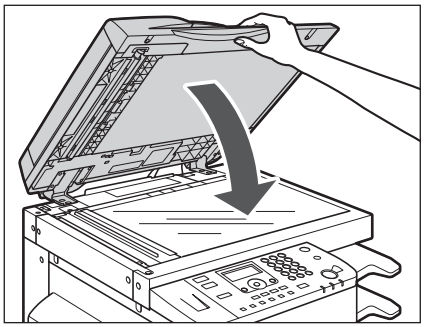

Close the feeder.

CAUTION

When closing the feeder, be careful not to get your fingers caught, as this may result in personal injury.

Automatic Feeder Cleaning

If your originals have black streaks or appear dirty after scanning them through the optional feeder, clean the rollers of the feeder by repeatedly feeding blank sheets of paper through it.

NOTE

- This procedure is necessary only if the optional Feeder (DADF-P2) is attached.
- It takes approximately 20 seconds to clean the feeder.

1 **Press (Additional Functions).**

The Additional Functions menu appears.

2

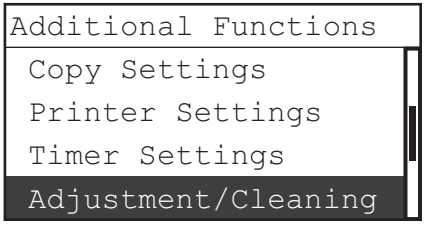

Use [▼] or [▲] to select <Adjustment/Cleaning> → press [OK].

The Adjustment/Cleaning menu appears.

3

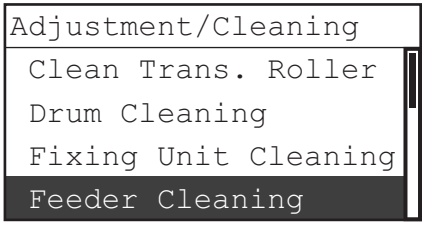

Use [▼] or [▲] to select <Feeder Cleaning> → press [OK].

4 **Place 5 sheets of blank paper into the feeder.**

Make sure that you fan the sheets of paper well.

Use A4 paper (60 g/m^2 to 80 g/m^2).

5

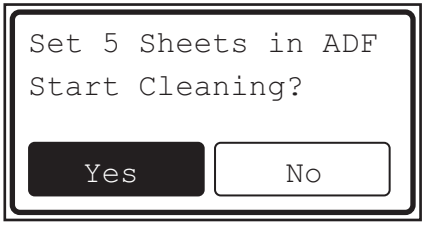

Use [◀] or [▶] to select <Yes> → press [OK].

The machine starts cleaning the feeder.

After the cleaning is completed, the screen returns to the Standby display. The feeder is clean. Try scanning again.

Transcription Roller Cleaning

If the back side of printed paper is smudged, the transcription roller in the main unit may be dirty. If this happens, use the Transcription Roller Cleaning function to clean the transcription roller.

1 **Press (Additional Functions) → use [▼] or [▲] to select <Adjustment/Cleaning> → press [OK].**

For help, see the screen shots in step 2 of "Automatic Feeder Cleaning," on p. 6-29.

The Adjustment/Cleaning menu appears.

2

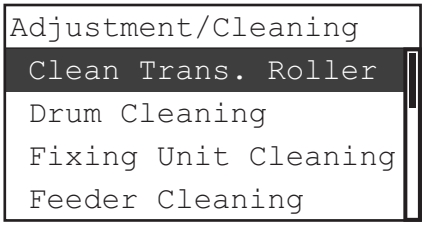

Use [▼] or [▲] to select <Clean Trans. Roller> → press [OK].

The <Start Cleaning?> display appears.

3



Use [◀] or [▶] to select <Yes> → press [OK].

The machine starts cleaning the transcription roller.

After the cleaning is completed, the screen returns to the Standby display.

Drum Cleaning

If print quality decreases, the drum in the main unit may be dirty. If this happens, use the Drum Cleaning function to clean the drum.

1 Press (Additional Functions) → use [▼] or [▲] to select <Adjustment/Cleaning> → press [OK].

For help, see the screen shots in step 2 of “Automatic Feeder Cleaning,” on p. 6-29.

The Adjustment/Cleaning menu appears.

2

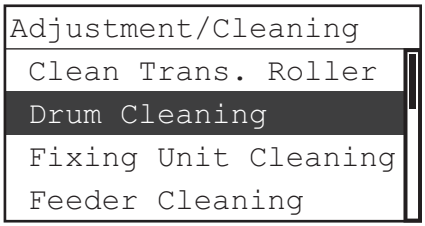

Use [▼] or [▲] to select <Drum Cleaning> → press [OK].

The <Start Cleaning?> display appears.

3



Use [◀] or [▶] to select <Yes> → press [OK].

The machine starts cleaning the drum.

After the cleaning is completed, the display returns to the Standby display.

Fixing Unit Cleaning

If black streaks appear on the printed page, the fixing unit may be dirty. Use the Fixing Unit Cleaning function to print the cleaning pattern on A4 paper to clean the Fixing Unit. You should also use the Fixing Unit Cleaning function every time the toner cartridge is replaced.

IMPORTANT

The cleaning pattern can be printed only on A4 paper.

NOTE

Before cleaning the fixing unit, make sure that the paper size and type for <Stand. Stack Bypass> are set to ‘A4’ and ‘Plain’. To check or change the current settings, follow step 1 of the procedure below.

1 **Press (Additional Functions) → use [▼] or [▲] to select <Common Settings> → press [OK] → use [▼] or [▲] to select <Stand. Stack Bypass> → press [OK].**

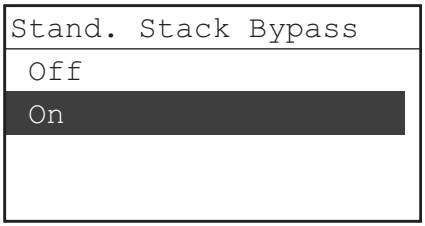

❑ Use [▼] or [▲] to select <On> → press [OK].



❑ Use [▼] or [▲] to select the paper size → press [OK].

Select <A4>.

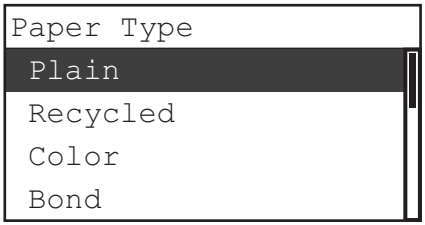

❑ Use [▼] or [▲] to select the paper type → press [OK].

Select <Plain>.

2 **Press (Reset) to return to the Standby display.**

3 **Press (Additional Functions) → use [▼] or [▲] to select <Adjustment/Cleaning> → press [OK].**

4

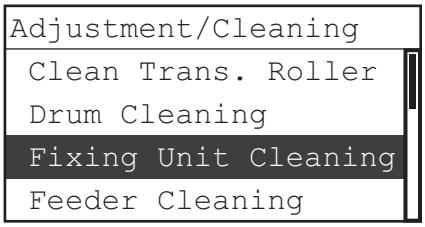

Use [▼] or [▲] to select <Fixing Unit Cleaning> → press [OK].

The <Start Cleaning?> display appears.

5



Use [◀] or [▶] to select <Yes> → press [OK].

The message <A cleaning page will be printed> appears.

6



Press [OK].

Make sure that A4 paper is loaded in a drawer.

Printing the cleaning page starts.

7

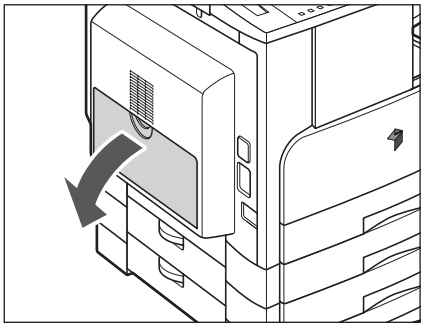

Open the stack bypass.

8

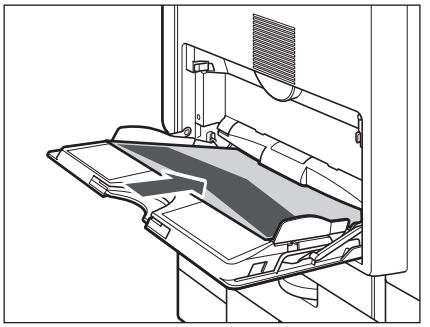

Load the cleaning page with the printed side facing up, inserting the white edge into the stack bypass first.

9

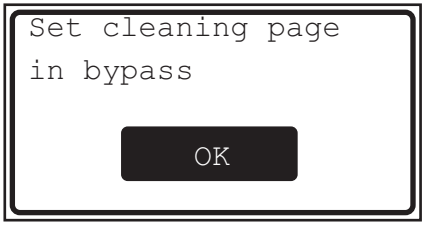

Press [OK].

Cleaning starts.

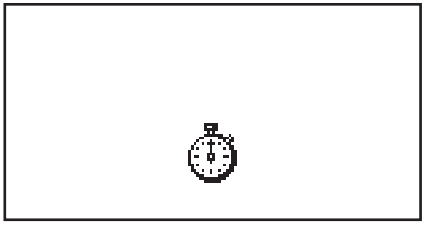

While the cleaning is in progress, the display on the left appears.

When cleaning is complete, the LCD display returns to that on step 5.

Discard the used cleaning page.

NOTE

- Cleaning the fixing unit takes approximately 100 seconds.
- The cleaning process cannot be canceled. Please wait until it is completed.
- If the cleaning page jams while cleaning, the error indicator flashes. Press (Stop) and remove the jammed cleaning page.

10 Repeat steps 5 to 6.

Printing another cleaning page starts.

11

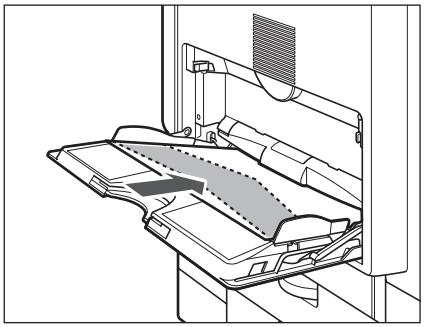

Load the new cleaning page with the printed side facing down, inserting the white edge into the stack bypass first.

12 Repeat step 9.

The LCD display returns to that on step 5.

13



Use [◀] or [▶] to select <No> → press [OK] to return to the <Additional Functions> menu.

To return to the standby display, press (Reset).

Discard the used cleaning page.

NOTE

If you want to set the <Standard Stack Bypass> 'Off', or change the paper size and type settings, return to step 1 to clear or change the settings you have made for the cleaning.

Offset Roller Cleaning

When the offset rollers become dirty, the accuracy of paper alignment deteriorates. Perform offset roller cleaning once a month to maintain the accuracy.

WARNING

When cleaning the machine, first turn OFF the main power switch and disconnect the power cord. Failure to observe these steps may result in a fire or electrical shock.

NOTE

If either the optional Inner 2 Way Tray-E2 or Additional Finisher Tray-C1 is attached, it is recommended that you clean the roller after printing to the top tray.

1 **Lift the rollers slightly, and use a damp cloth to wipe the surface of the rollers while rotating them.**

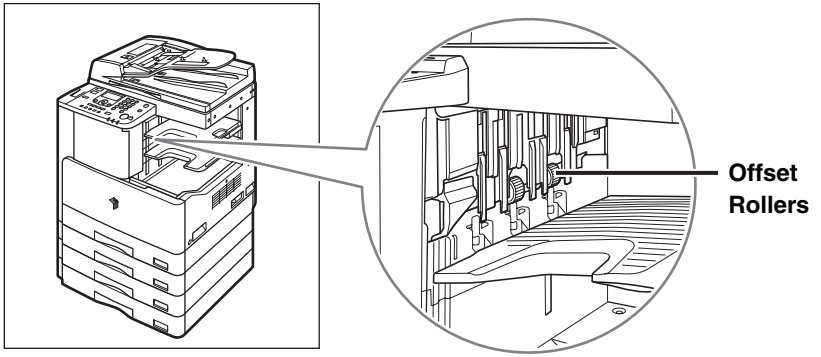

2 **Wait approximately three minutes for the rollers to dry before performing operations, or wipe the roller surface dry with a soft cloth.**

Consumables

The following consumables are available from Canon. For more information, contact your local authorized Canon dealer.

We recommend that you order paper stock and toner from your local authorized Canon dealer before your stock runs out.

CAUTION

Keep toner and other consumables out of the reach of small children. If these items are ingested, consult a physician immediately.

Paper Stock

In addition to plain paper (A4, A3, and A5), recycled paper, color paper, transparencies (recommended for this machine), labels, and other types of paper stock are available. For more information, contact your local authorized Canon dealer.

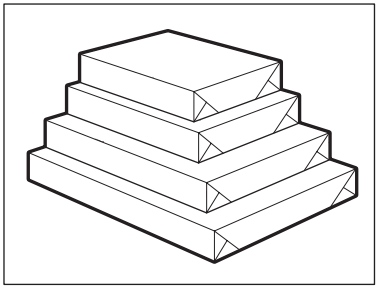

CAUTION

Do not store paper in places exposed to open flames, as this may cause the paper to ignite, resulting in burns or a fire.

IMPORTANT

To prevent moisture build-up, tightly wrap any remaining paper in its original package for storage.

NOTE

- For high-quality printouts, use paper recommended by Canon.
- Some commercially available paper types are not suited for this machine. Contact your local authorized Canon dealer when you need to purchase paper.

Toner

If a message prompting you to replace the toner cartridge appears on the LCD display, replace the toner cartridge with a new one.
Use only toner cartridges intended for use with this machine.

For optimum print quality, using Canon genuine toner is recommended.

Product Name	Supported Canon Genuine Toner
imageRUNNER 2422/2420	Canon C-EXV 14 Black Toner

WARNING

- **Do not burn or throw used toner cartridges into open flames, as this may cause the toner remaining inside the cartridges to ignite, resulting in burns or a fire.**
- **Do not store toner cartridges in places exposed to open flames, as this may cause the toner to ignite and result in burns or a fire.**
- **If you accidentally spill or scatter toner, carefully gather the toner particles together or wipe them up with a soft, damp cloth in a way that prevents inhalation.**
  Never use a vacuum cleaner that does not have safeguards against dust explosions to clean up spilled toner. Doing so may cause a malfunction in the vacuum cleaner, or result in a dust explosion due to static discharge.

CAUTION

Keep toner and other consumables out of the reach of small children. If these items are ingested, consult a physician immediately.

IMPORTANT

- Store toner cartridges in a cool location, away from direct sunlight. The recommended storage conditions are:
  - Temperature below 30 °C, and humidity below 80%.
- Do not store the cartridges in a vertical position.

Be careful of counterfeit toners

Please be aware that there are counterfeit Canon toners in the marketplace. Use of counterfeit toner may result in poor print quality or machine performance. Canon is not responsible for any malfunction, accident or damage caused by the use of counterfeit toner.

For more information, see http://www.canon.com/counterfeit.

Genuine Supplies

Canon has developed and manufactured Toner, Parts, and Supplies specifically for use in this machine. For optimal print quality and for optimal machine performance and productivity, we recommend that you use Genuine Canon Toner, Parts, and Supplies. Contact your Canon Authorized Dealer or Service Provider for Genuine Canon Supplies.



Troubleshooting

CHAPTER 7

This chapter describes what to do in response to paper jams in the main unit or optional units, and error messages.

When Paper Jams Occur Frequently 7-2

Clearing Paper Jams 7-3

- Clearing Paper Jams with On-Screen Instructions 7-3
- Fixing Unit 7-5
- Paper Drawer 1 7-8
- Paper Drawers 2, 3, and 4 7-12
- Stack Bypass 7-16
- Duplex Unit-A1 (Optional) 7-17
- Feeder (DADF-P2) (Optional) 7-19
- Finisher-U2 (Optional) 7-23
- Inner 2 Way Tray-E2 (Optional) 7-25

Clearing Staple Jams 7-28

- Finisher-U2 (Optional) 7-28

List of Error Messages 7-31

- Self-Diagnostic Display 7-31

Service Call Message 7-37

- Contacting Your Local Authorized Canon Dealer 7-37

When Paper Jams Occur Frequently

If paper jams occur frequently, even though there is no apparent problem with the machine, either one of the following two reasons may be the cause. Follow the instructions described below to reduce the frequency of paper jams.

■ **There are torn pieces of paper left inside the machine.**

Pulling jammed paper out of the machine by force may leave parts of the paper torn inside, leading to frequent paper jams. If paper tears while you are trying to remove jammed paper from the machine, make sure that you remove all of the torn pieces.

■ **The paper size detecting lever is set incorrectly.**

Make sure that the paper size detecting lever located on the left side of a paper drawer matches the size of the paper loaded in the paper drawer. If the paper size detecting lever is set incorrectly, paper jams may occur more frequently. (See “Adjusting a Paper Drawer to Hold a Different Paper Size,” on p. 6-6.)

Clearing Paper Jams

Clearing Paper Jams with On-Screen Instructions

If a paper jam occurs, the display below appears. It is the first page of the On-Screen Instructions that help you clear the paper jam. The On-Screen Instructions show you how to clear the paper jam step by step. You can proceed to the next step by pressing **[▶]** or return to the previous step by pressing **[◀]**.

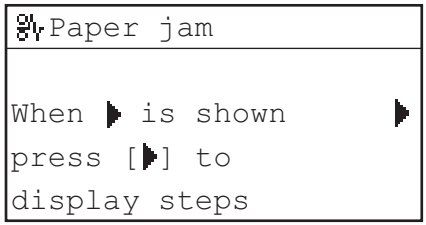

⚠ WARNING

There are some areas inside the machine which are subject to high-voltages. When removing jammed paper or when inspecting the inside of the machine, do not allow necklaces, bracelets, or other metal objects to touch the inside of the machine, as this may result in burns or electrical shock.

⚠ CAUTION

- **When removing jammed originals or paper, take care not to cut your hands on the edges of the original or paper.**
- **When removing paper which has become jammed inside the machine, take care not to cut your hands or injure yourself on the parts on the inside of the machine. If you cannot remove the paper, please contact your local authorized Canon dealer.**
- **When removing paper which has become jammed inside the machine, take care not to allow the toner on the jammed paper to come into contact with your hands or clothing, as this will dirty your hands or clothing. If they become dirty, wash them immediately with cold water. Washing with warm water may set the toner and make it impossible to remove the toner stains.**
- **When removing paper which has become jammed inside the machine, remove the jammed paper gently to prevent the toner on the paper from scattering and getting into your eyes or mouth. If the toner gets into your eyes or mouth, wash immediately with cold water and immediately consult a physician.**

- **The fixing unit and its surroundings inside the machine may become hot during use. When removing jammed paper or when inspecting the inside of the machine, do not touch the fixing unit and its surroundings, as this may result in burns or electrical shock.**
- **After clearing all paper jams, remove your hands from the machine immediately. Even if the machine is not in operation, your hands, hair, or clothing may get caught in the feed rollers, which could result in personal injury or damage if the machine suddenly starts printing.**

IMPORTANT

If the machine's power is turned OFF after there is a paper jam, detection of paper jams in the paper drawers is not possible after the power is turned back ON. Clear paper jams before turning the power OFF.

NOTE

- Some areas that the On-Screen instruction indicates may not actually have any jammed paper. If you cannot find any jammed paper where the machine indicates, check other locations of the machine.
- Page numbers of the On-Screen Instructions, which actually appear on the lower right corner of the screen, are not shown in this manual because they may vary depending on the paper jam conditions.

1 Press [▶] to proceed to the next page of the On-Screen Instruction.

2 Remove the jammed paper by following the instruction.

If the jammed paper tears while being removed, be sure to remove any remaining pieces from the inside of the machine.

3 Press [▶] to proceed to the next step when you have done the step the instruction indicated.

To return to the previous step and retry it, press [◀].

4 After you have cleared all the paper jams, be sure to return all the levers and covers to their original positions.

When all the steps are completed and return all the levers and covers to their original positions, the LCD display returns to the Standby display.

If there is any paper that still needs to be removed, another On-Screen Instruction appears on the LCD display.

Once you have removed all of the jammed paper in locations other than the optional feeder, printing or copying resumes.

IMPORTANT

If a paper jam occurs in the feeder, you cannot continue operating the machine. Follow the procedure to remove the jammed paper. (See “Feeder (DADF-P2) (Optional),” on p. 7-19.)

NOTE

You do not have to re-enter the number of copies or prints, even if you are printing multiple sets. The machine automatically recalculates the number of copies or prints to make based on the number of sheets that have jammed.

Fixing Unit

If a paper jam occurs in the fixing unit, follow the procedure described below to remove the jammed paper.

1 Press the button on the left cover of the main unit, and open the left cover.

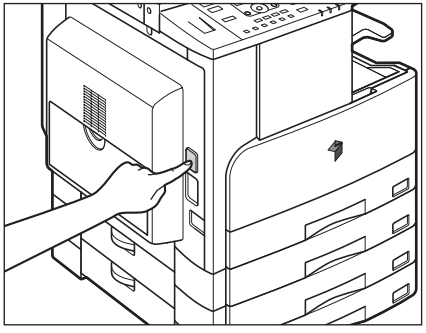

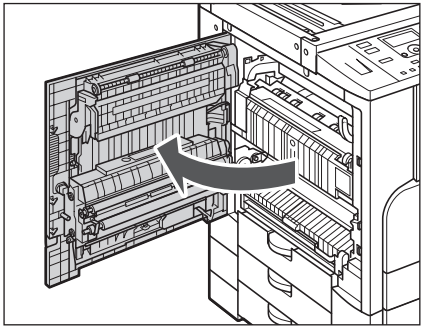

2 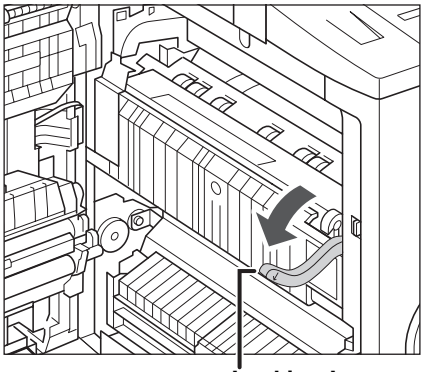

Push down the green locking lever.

CAUTION

The parts located around the exit slot guide and the fixing unit are subject to high temperatures. When removing jammed paper, take care not to touch anything in this area except the lever.

3 **Use the green tab to lift up the exit slot cover and remove any jammed paper.**

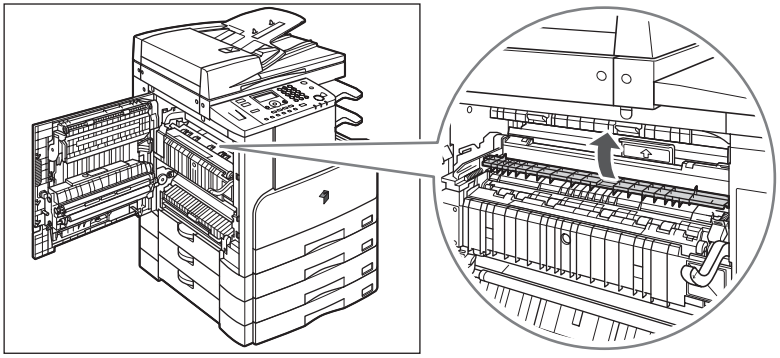

4 **While holding down the lever on the right corner of the fixing unit, open the upper cover of the fixing unit and remove any jammed paper.**



5

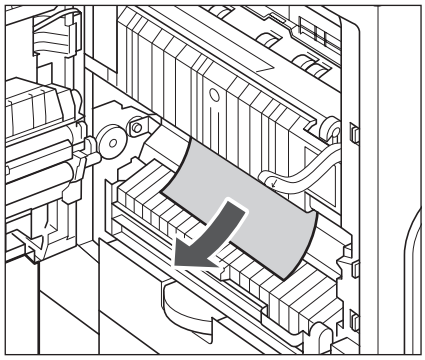

Remove any jammed paper that is protruding from the lower part of the fixing unit.

CAUTION

The parts inside the fixing unit are subject to high temperatures. When removing jammed paper, take care not to touch anything in this area, except the upper cover.

6

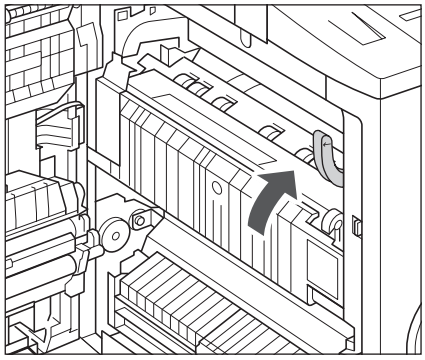

Return the green locking lever to its original position.

7

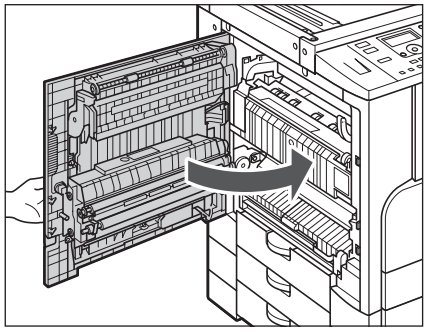

Place your hand where the hand symbol (☜) is located on the left cover of the main unit, and then gently close the left cover until it clicks into place in the closed position.

CAUTION

When closing the left cover, be careful not to get your fingers caught, as this may result in personal injury.

Paper Drawer 1

If a paper jam occurs inside paper drawer 1, follow the procedure described below to remove the jammed paper.

1

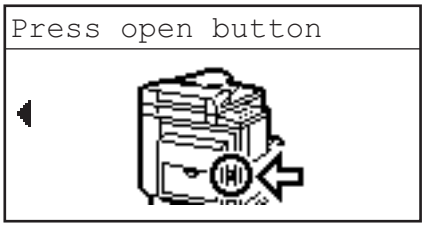

Press the button on the left cover of the main unit, and open the left cover.

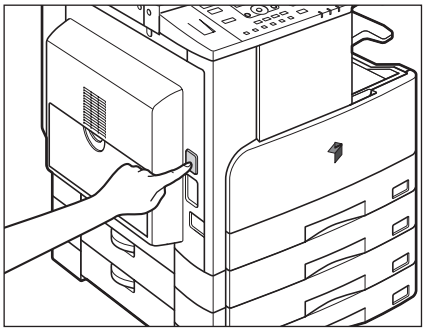

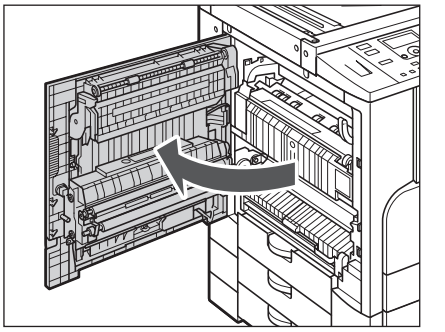

2

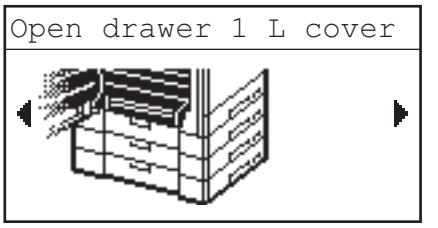

Open the paper drawer's left cover.

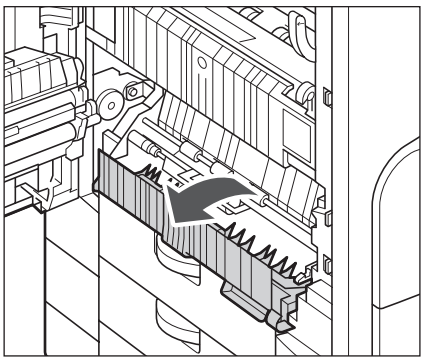

3 Remove jammed paper

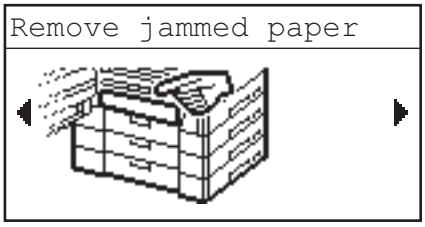

Remove any jammed paper.

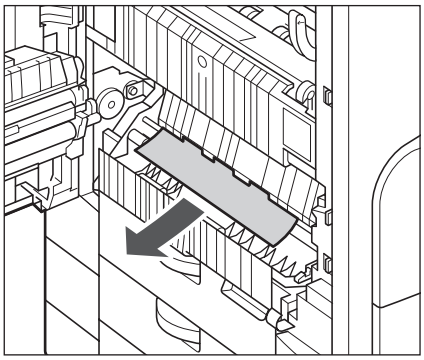

4 Open drawer 1

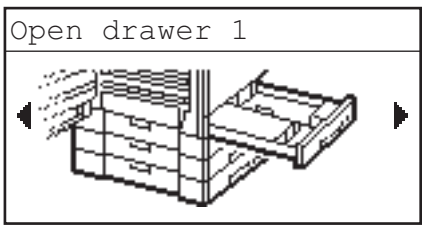

Grip the handle, and pull out the paper drawer until it stops.

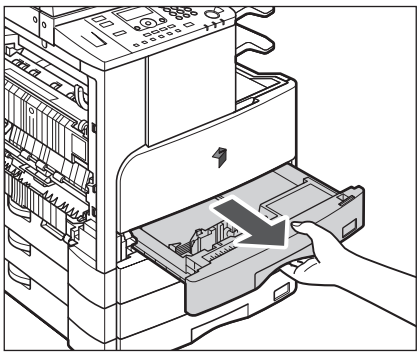

5

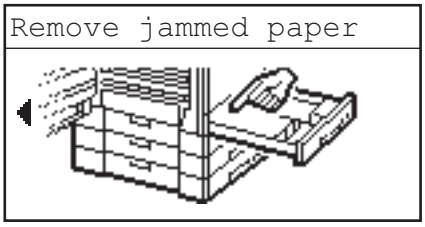

Remove any jammed paper.

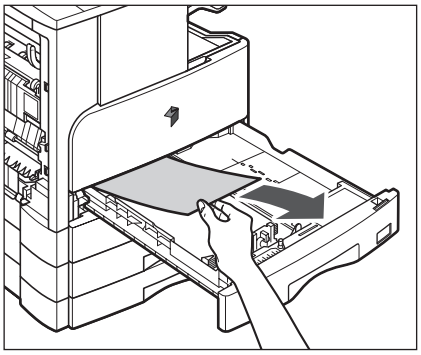

6

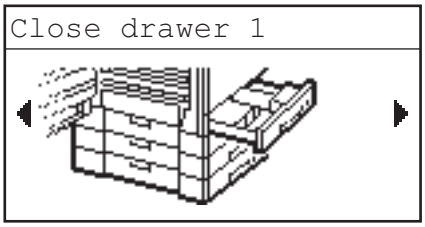

Gently push the paper drawer back into the machine until it clicks.

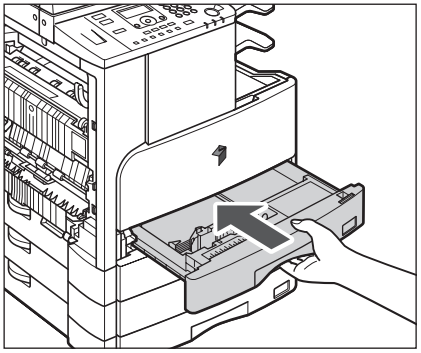

CAUTION

When returning the paper drawer to its original position, be careful not to get your fingers caught, as this may result in personal injury.

7

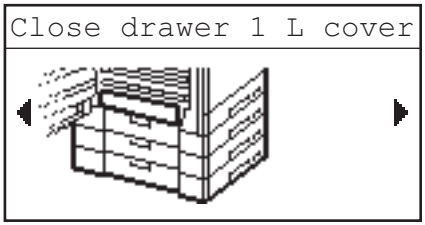

Close the paper drawer's left cover.

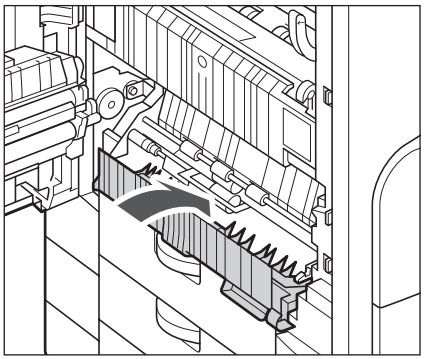

CAUTION

When closing the paper drawer's left cover, be careful not to get your fingers caught, as this may result in personal injury.

8

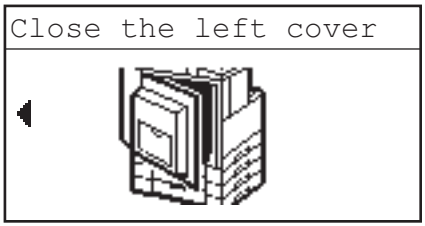

Place your hand where the hand symbol (☜) is located on the left cover of the main unit, and then gently close the left cover until it clicks into place in the closed position.

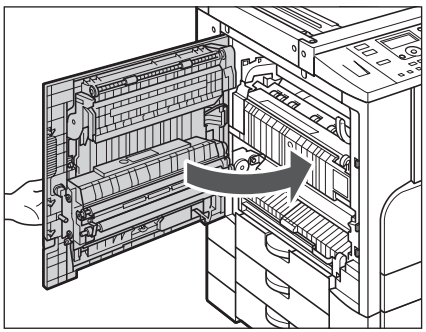

CAUTION

When closing the left cover, be careful not to get your fingers caught, as this may result in personal injury.

Paper Drawers 2, 3, and 4

If a paper jam occurs inside the optional paper drawers 2, 3, and 4, follow the procedure described below to remove the jammed paper.

NOTE

- Paper Drawer 2 can be added by attaching the optional Cassette Feeding Module-J1 or -K1.
- Paper Drawer 3 (and 4) can be added by attaching the optional Cassette Feeding Module-K1.
- The On-Screen Instruction screens in this procedure are for paper drawer 2. Procedure for paper drawer 3 and 4 is the same as that for paper drawer 2.

1

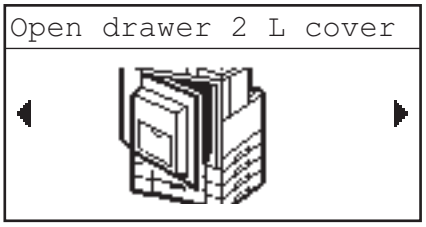

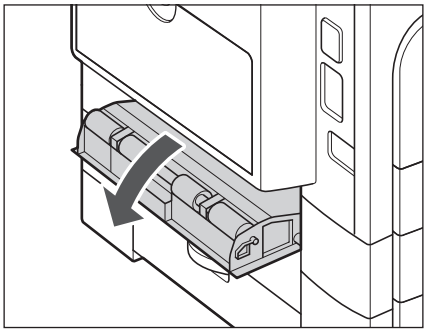

Open the paper drawer's left cover.

2 Remove any jammed paper.

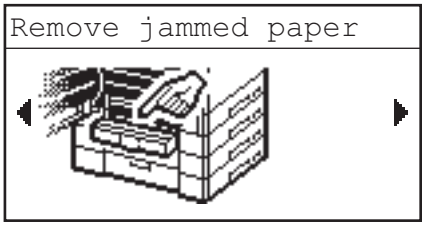

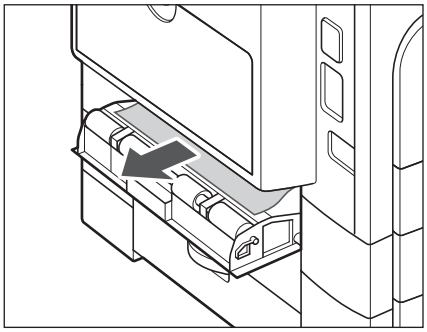

3 Grip the handle, and pull out the paper drawer until it stops.

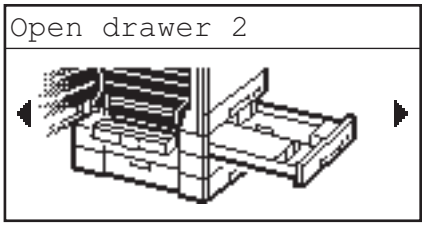

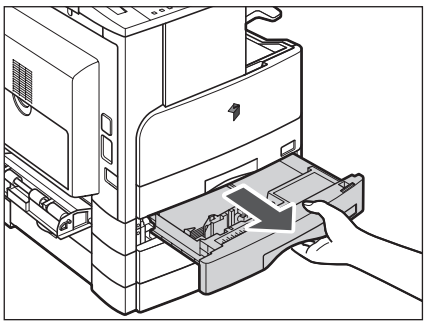

4

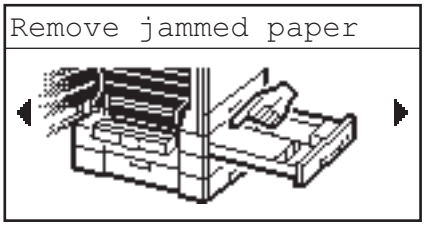

Remove any jammed paper.

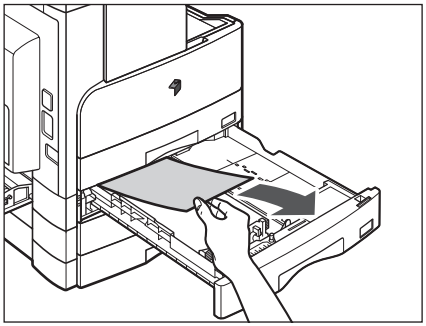

5

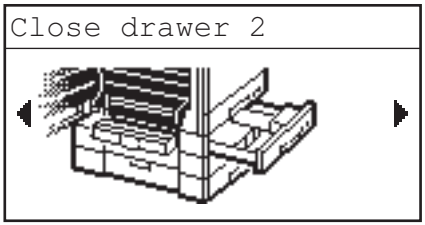

Gently push the paper drawer back into the machine until it clicks.

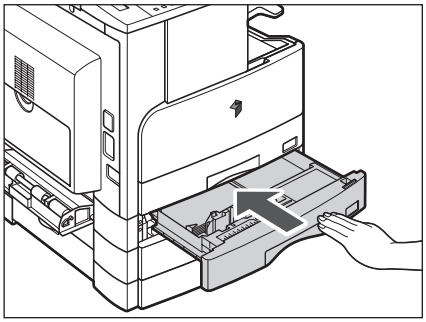

CAUTION

When returning the paper drawer to its original position, be careful not to get your fingers caught, as this may result in personal injury.

6

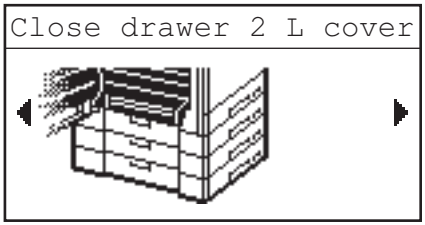

Close the paper drawer's left cover.

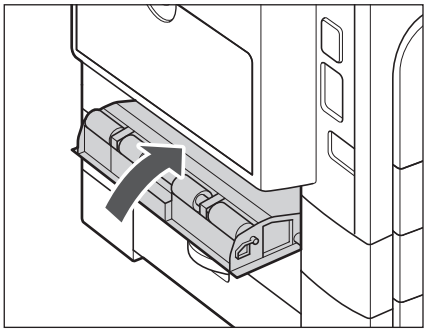

CAUTION

When closing the paper drawer's left cover, be careful not to get your fingers caught, as this may result in personal injury.

Stack Bypass

If a paper jam occurs in the stack bypass, follow the procedure below to remove the jammed paper.

1 Remove all paper from the stack bypass.

2



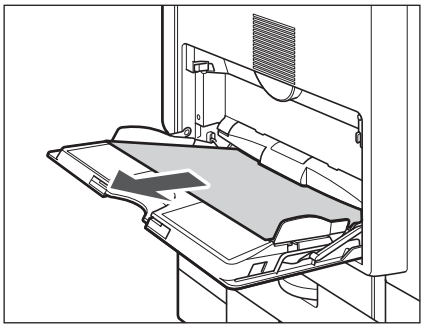

Remove any jammed paper.

If you cannot remove the jammed paper, follow the procedure described in “Fixing Unit,” on p. 7-5.

Duplex Unit-A1 (Optional)

If a paper jam occurs inside the Duplex Unit-A1, follow the procedure described below to remove the jammed paper.

1

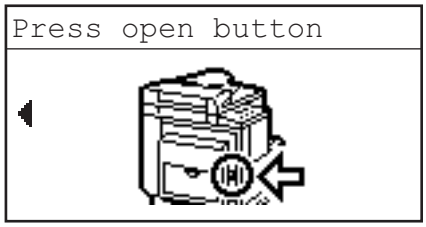

Press the button on the left cover of the main unit, and open the left cover.

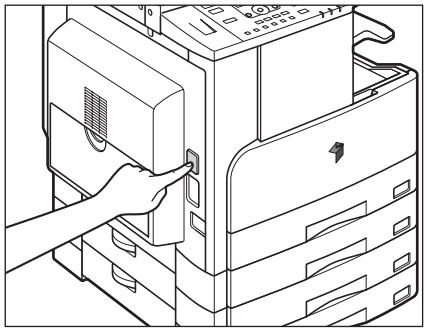

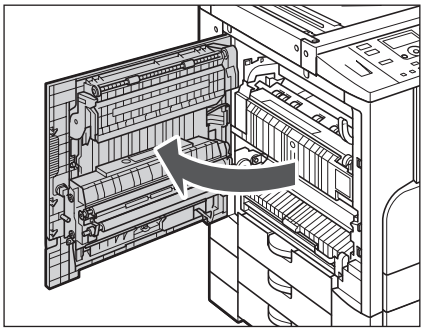

2

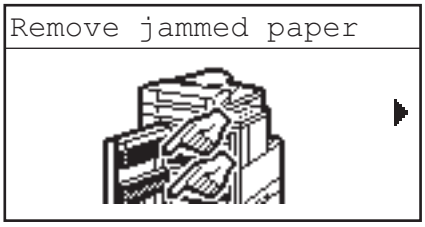

Remove any jammed paper that is protruding from the upper and lower parts of the duplex unit.

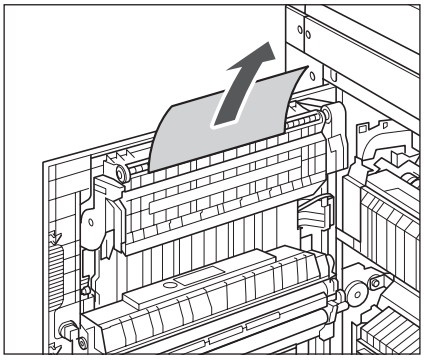

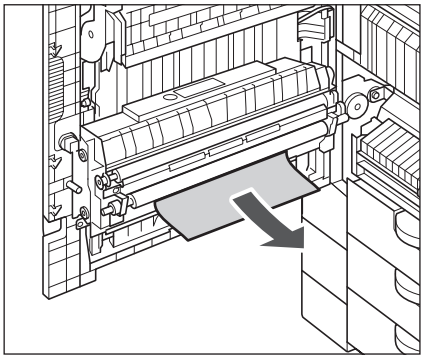

CAUTION

Some parts of the Duplex Unit-A1 are subject to high temperatures. When removing jammed paper, take care not to touch anything in this unit.

NOTE

When removing the jammed paper from the bottom of the duplex unit, pull the jammed paper obliquely downward. Do not pull the jammed paper vertically downward.

3

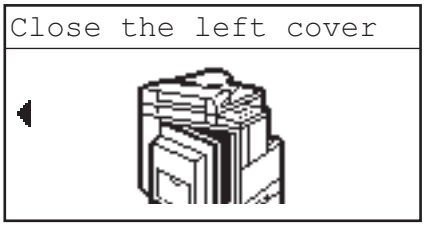

Place your hand where the hand symbol (☜) is located on the left cover of the main unit, and then gently close the left cover until it clicks into place in the closed position.

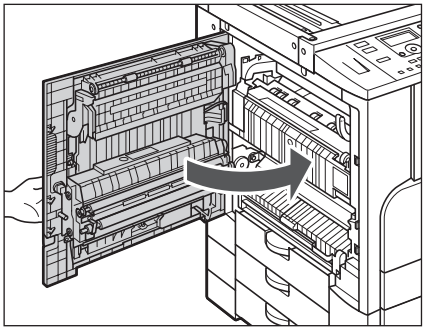

CAUTION

When closing the left cover, be careful not to get your fingers caught, as this may result in personal injury.

Feeder (DADF-P2) (Optional)

If a paper jam occurs in the feeder, follow the procedure described below to remove the jammed paper.

1



Open the feeder cover.

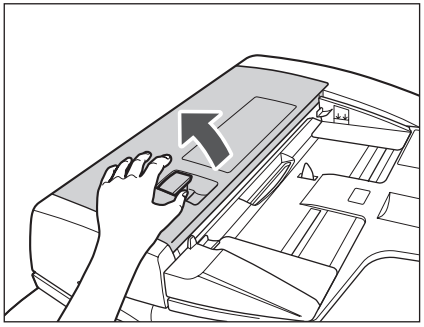

2



Open the inner cover, holding it by its front tab.

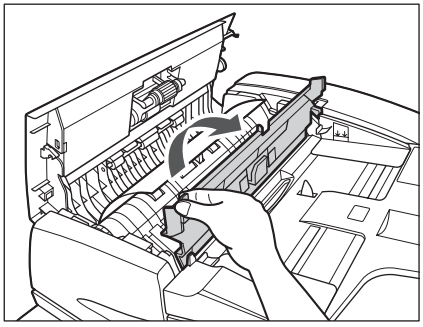

3

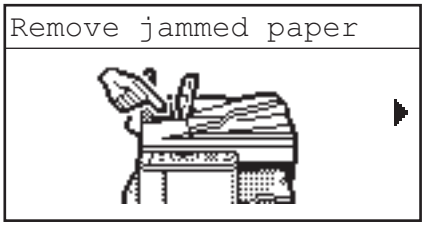

Remove any jammed originals.

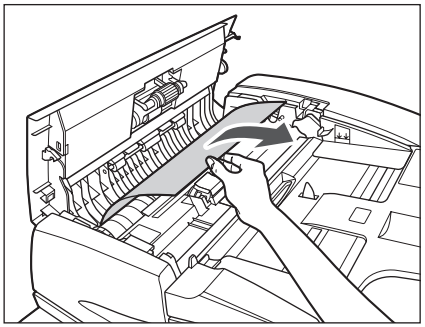

IMPORTANT
Do not pull the original forcibly, because it may tear.

4

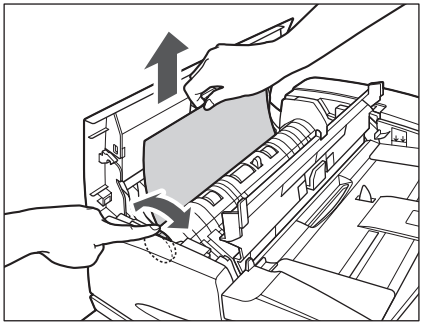

Turn the feed dial, and remove any jammed originals.

5



Close the inner cover.

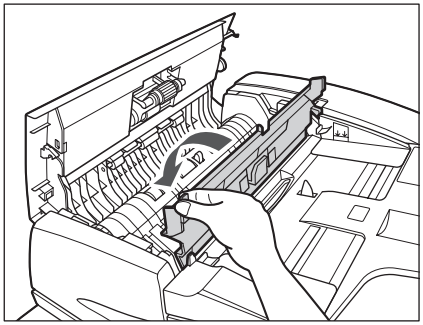

CAUTION

When closing the inner cover, be careful not to get your fingers caught, as this may result in personal injury.

6

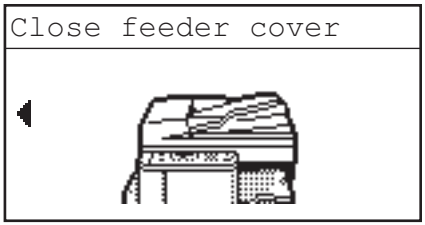

Close the feeder cover.

If you cannot remove the original, proceed to step 7.

If you have removed the original, the procedure is complete.

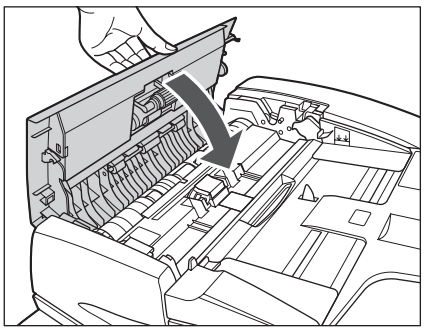

CAUTION

When closing the feeder cover, be careful not to get your fingers caught, as this may result in personal injury.

7

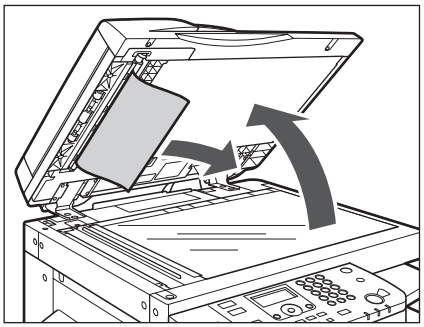

Lift the feeder, and remove any jammed originals.

8

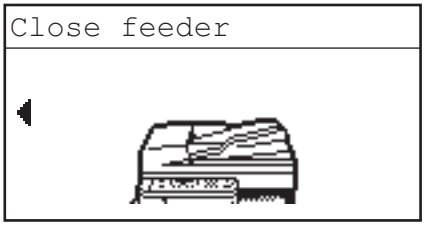

Close the feeder.

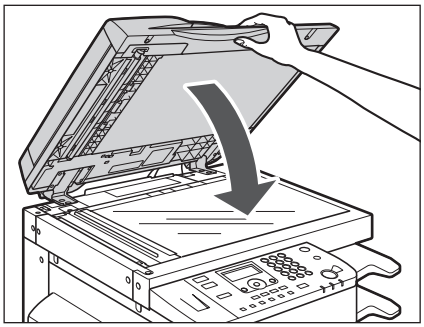

CAUTION

When closing the feeder, be careful not to get your fingers caught, as this may result in personal injury.

Finisher-U2 (Optional)

If a paper jam occurs when using the finisher, follow the procedure described below to remove the jammed paper.

1

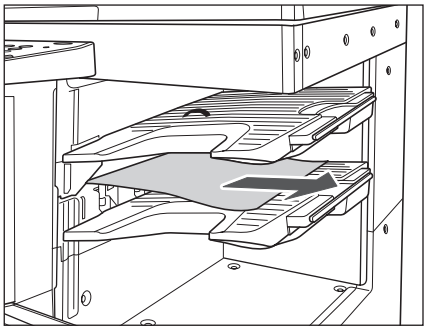

If you see any jammed paper near the paper output area, remove it.

If the jammed paper was successfully removed, further steps are unnecessary.

If you cannot remove the jammed paper, proceed to step 2.

IMPORTANT

Do not attempt to pull out the jammed paper by force. This may damage the machine.

2 Press the button on the left cover of the main unit, and open the left cover.

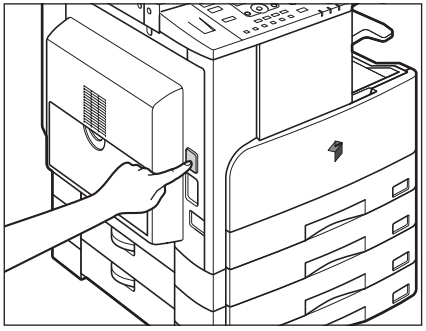

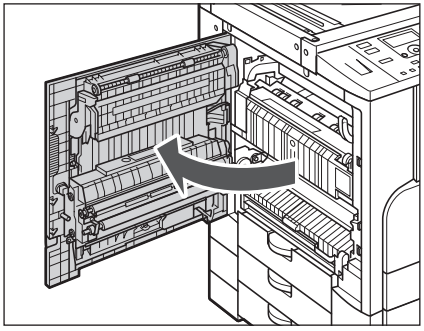

3

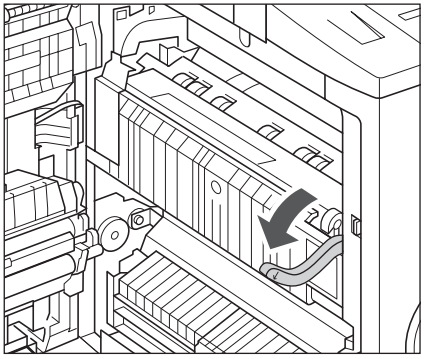

Push down the green locking lever.

CAUTION

The parts located around the exit slot guide and the fixing unit are subject to high temperatures. When removing jammed paper, take care not to touch anything in this area except the lever.

4 **Use the green tab to lift up the upper cover of the fixing unit.**

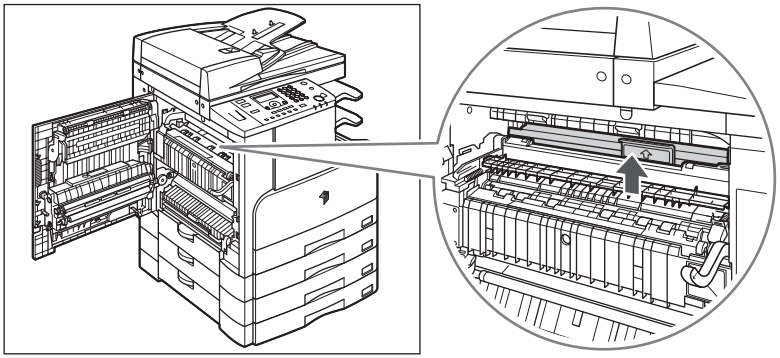

5 **Remove any jammed paper that is protruding from the finisher.**

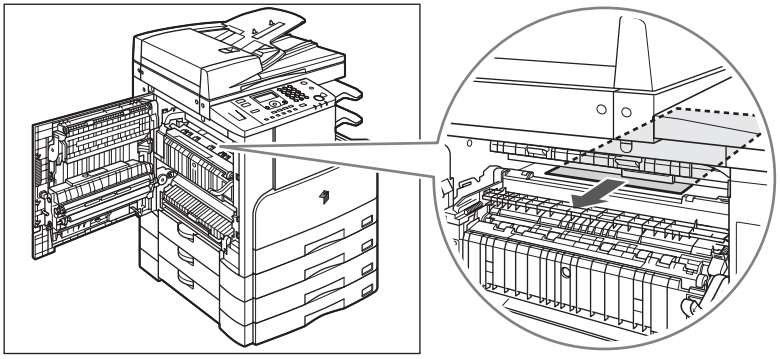

CAUTION

Be careful not to touch the inside of the machine because some parts can get very hot.

6

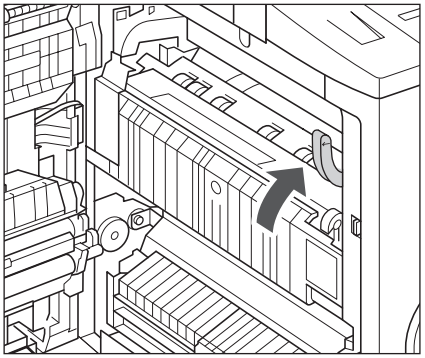

Return the green locking lever to its original position.

7

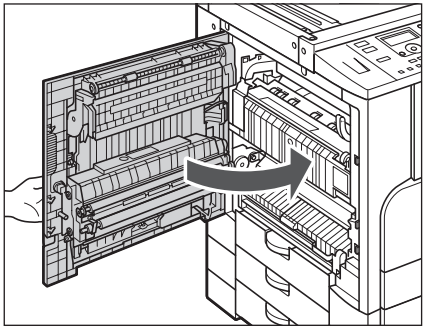

Place your hand where the hand symbol (☞) is located on the left cover of the main unit, and then gently close the left cover until it clicks into place in the closed position.

⚠ CAUTION

When closing the left cover, be careful not to get your fingers caught, as this may result in personal injury.

Inner 2 Way Tray-E2 (Optional)

If a paper jam occurs in the Inner 2 Way Tray-E2, follow the procedure described below to remove the jammed paper.

1

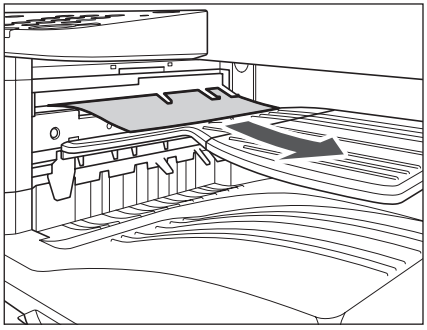

If you see any jammed paper near the paper output area, remove it.

If the jammed paper was successfully removed, further steps are unnecessary.

If you cannot remove the jammed paper, proceed to step 2.

IMPORTANT

Do not attempt to pull out the jammed paper by force. This may damage the machine.

2 **Press the button on the left cover of the main unit, and open the left cover.**

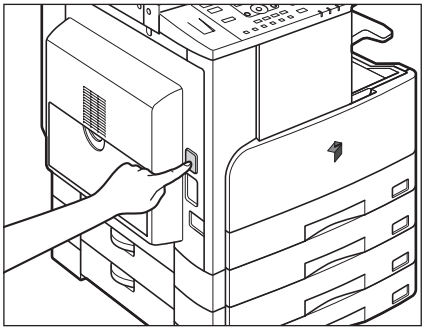

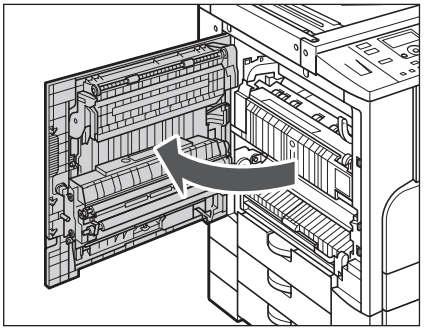

3 **Push down the green locking lever.**

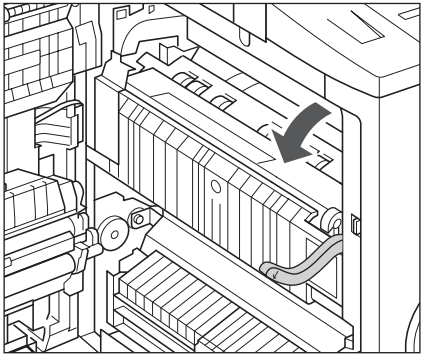

CAUTION

The parts located around the exit slot guide and the fixing unit are subject to high temperature. When removing jammed paper, take care not to touch anything in this area except the lever.

4 **Holding the green handle, lift the inner guide.**

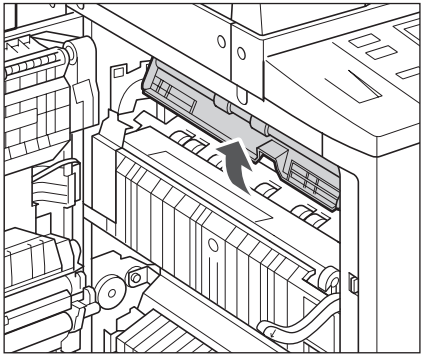

5

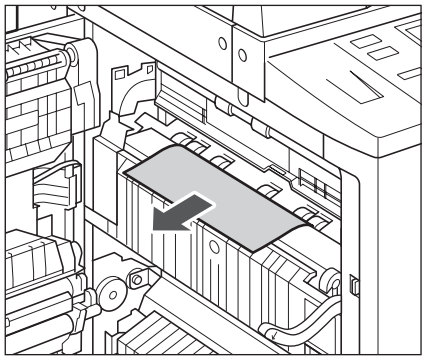

Remove any jammed paper.

CAUTION

Be careful not to touch the inside of the machine because some parts can get very hot.

6

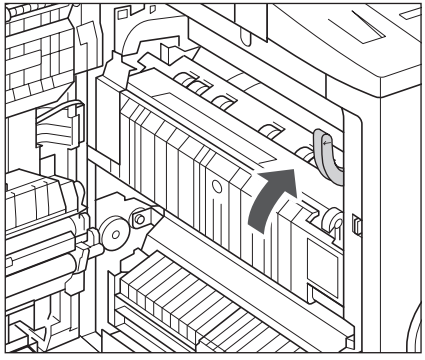

Return the green locking lever to its original position.

7

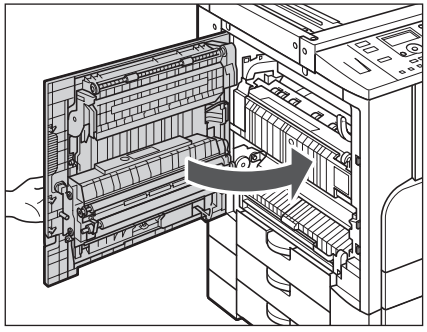

Place your hand where the hand symbol (☜) is located on the left cover of the main unit, and then gently close the left cover until it clicks into place in the closed position.

CAUTION

When closing the left cover, be careful not to get your fingers caught, as this may result in personal injury.

Clearing Staple Jams

If a staple jam occurs, the following display appears. follow the procedure described below or the On-Screen Instructions to remove the jammed staples.

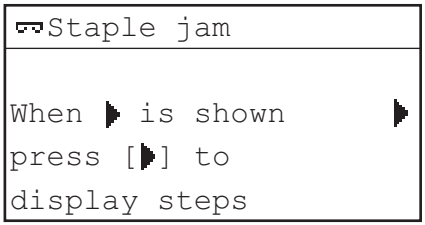

Finisher-U2 (Optional)

If the machine does not staple even though you have set the staple mode, staple jams may have occurred in the optional Finisher-U2. Follow the procedure described below to remove the jammed staples.

1 **Open the front cover of the finisher.**

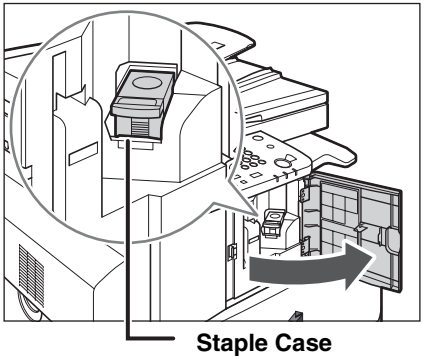

2 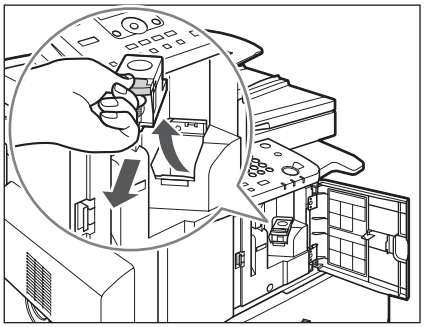

Lift and pull out the staple case, holding it by its green tab.

3 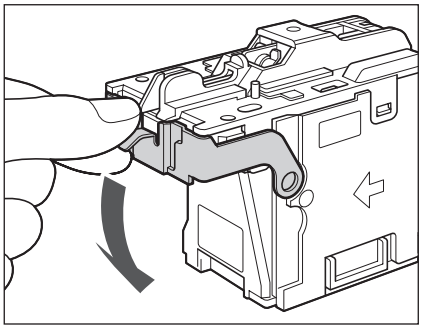

Push down the tab of the staple case.

4 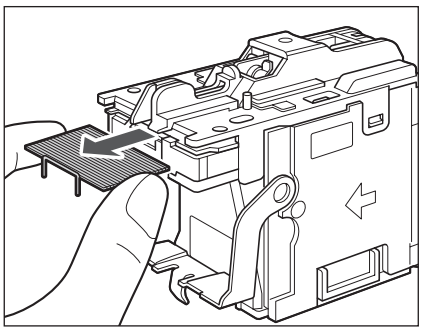

Remove all of the staples that slide from the staple case.

5 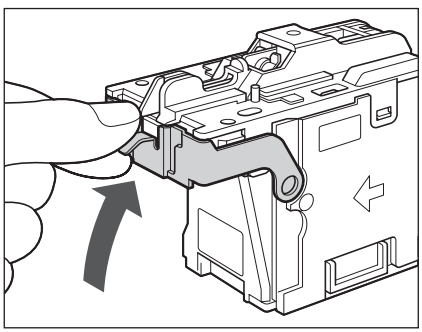

Return the tab of the staple case to its original position.

6

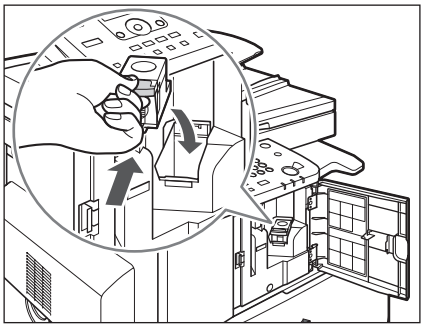

Gently push the staple case into the finisher, until it is securely in place.

7

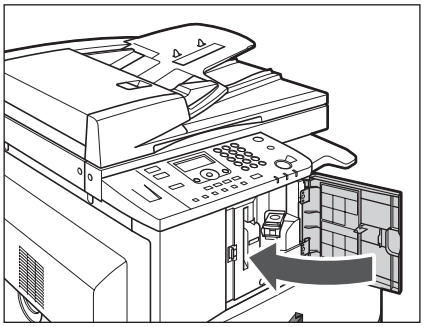

Close the front cover of the finisher.

CAUTION

When closing the front cover of the finisher, be careful not to get your fingers caught, as this may result in personal injury.

NOTE

If there are no staples ready for stapling after the cover is closed, the stapler unit automatically performs a “dry” stapling operation to reposition the staples.

List of Error Messages

This section explains the various messages that appear on the LCD display, along with possible causes and remedies.

Self-Diagnostic Display

If the machine displays a self-diagnostic error message, follow the instructions on the LCD display.

Self-diagnostic (error) messages appear on the LCD display in the following cases:

- Scanning or printing cannot be performed because of an operational error.
- You need to make a decision or take some action during scanning, copying, or printing.
- You need to make a decision or take some action while browsing the network.

Cannot staple/Reduce output pages

Cause The machine cannot staple the printouts because too many sheets of paper have been printed out.

Remedy The printouts are simply collated without stapling. If necessary, reduce the number of pages in the document and print again.

Cannot use 2-Sided/Change paper size

Cause When making two-sided copies, one of the following paper sizes has been selected: A5 or Free Size.

Remedy Load the paper vertically into the stack bypass to make two-sided copies.

Cannot use 2-Sided/Change paper type

Cause When making two-sided copies, one of the following paper types has been selected: Envelopes, Labels, Heavy Paper 2, Heavy Paper 3, Bond, or Transparency.

Remedy Select one of the following paper types to make two-sided copies: Plain, Color, Recycled, or Heavy Paper 1.

Check document

Cause A paper jam may have occurred in the feeder.

Remedy Remove the jammed document.

Data error/Repairing data

Cause The machine may have trouble.

Remedy Contact your local authorized Canon dealer if the problem persists.

Document too long

Cause The original that you are trying to copy is too long for the feeder.

Remedy Scan the original on the platen glass.

Drawer 2 cover open/Close cover

Cause The left cover of Paper Drawer 2 is open.

Remedy Close the paper drawer's left cover.

Drawer 3 cover open/Close cover

Cause The left cover of Paper Drawer 3 is open.

Remedy Close the paper drawer's left cover.

Drawer 4 cover open/Close cover

Cause The left cover of Paper Drawer 4 is open.

Remedy Close the paper drawer's left cover.

Drum is not set/Insert the drum

Cause The drum unit has not been installed.

Remedy Install the drum unit. (See "Replacing the Drum Unit," on p. 6-16)

Exxx*

Cause An error has occurred in the machine.

Remedy Turn OFF the main power, wait for more than 10 seconds, then turn it ON again. If this does not solve the problem, disconnect the machine and contact your local authorized Canon dealer. (See “Service Call Message,” on p. 7-37.)
* xxx stands for a number.

Feeder cover open/Close cover

Cause The feeder cover is open.

Remedy Close the feeder cover.

Finisher cover open/Close cover

Cause The front cover of the finisher is open.

Remedy Close the front cover of the finisher.

Frnt/Left cover open/Close cover

Cause One or more covers are open.

Remedy Close all of the covers.

Load correct paper

Cause 1 The paper size detected automatically by the paper drawer does not match the actual paper size.

Remedy 1 Make sure that the paper size loaded in the paper drawer matches the paper size set for the drawer.

Remedy 2 Set the size for the paper drawer to match the paper you want to load into the drawer.

Cause 2 The paper size selected for the stack bypass in the Stand. Stack Bypass (Standard Stack Bypass) menu does not match the paper size loaded in the stack bypass.

Remedy 1 Load the correct paper size into the stack bypass.

Remedy 2 Set the paper size for the stack bypass to match the paper you want to load into the stack bypass.

Load paper

Cause The paper drawer is out of paper, or not inserted correctly.

Remedy 1 Load paper.

Remedy 2 Insert the paper drawer as far as it will go.

Memory full

Cause The machine's memory is full of scanned documents.

Remedy Divide the original into smaller batches and scan them one by one.

No appropriate size

Cause <Auto> is selected when copying, but paper of the appropriate size is not loaded in the paper drawer nor in the stack bypass.

Remedy 1 Select the desired paper size.

Remedy 2 Set the copy ratio to match the desired paper size. If you press (Start) while this message is displayed, the paper with the smallest margin is selected automatically, and printing starts.

Not connected/Check cable

Cause The network cable connection has some problem.

Remedy Make sure that the network cable is properly connected.

Out of staples/Replace staple cart.

Cause There are only a few staples remaining in the staple cartridge.

Remedy Replace the staple cartridge. (See "Replacing the Staple Cartridge," on p. 6-21.)

Out of toner

Cause The toner cartridge has run out of toner.

Remedy Replace the toner cartridge. (See "Replacing the Toner," on p. 6-10.)

Output tray full/Remove paper

Cause The output tray is full of paper.

Remedy Remove the prints from the output trays.

Over page limit/Press OK key

Cause — The machine is set to restrict printing, and the set page limit for printing has been reached.

Remedy — From the Dept. ID Management (Department ID Management) menu in the System Settings menu, open the Limit Settings menu and change the maximum number of pages that can be printed.

Paper jam

Cause 1 — An original jam or paper jam has occurred.

Remedy — Remove the jammed paper from the machine. (See “Clearing Paper Jams,” on p. 7-3.)

Cause 2 — A cover has been opened during printing.

Remedy — Open the cover again and check if there is any jammed paper. Clear the jammed paper, if any, and close the cover. The message disappears, and printing resumes.

Platen glass dirty/Clean platen glass

Cause — The feeder’s scanning area is dirty.

Remedy — Clean the feeder’s scanning area. (See “Manual Feeder Cleaning,” on p. 6-26.)

Restart the machine./If problem persists,/call service rep.

Cause — An error has occurred.

Remedy — Contact your local authorized Canon dealer. (See “Contacting Your Local Authorized Canon Dealer,” on p. 7-37.)

Set doc. on glass

Cause — The original has been placed in the feeder and a mode that cannot be used with the feeder, such as the 2-Page Separation mode, has been selected.

Remedy — Place the original on the platen glass.

Staple jam

Cause — A staple jam may have occurred in the Finisher-U2.

Remedy — Check if a staple jam has occurred. (See “Clearing Staple Jams,” on p. 7-28.)

This func. requires Optional equipment.

Cause The SCAN key has been pressed when the machine is not equipped with the optional network kit.

Remedy To make the scanning function available, the optional network kit is required.

This size cannot be stapled

Cause The machine cannot staple the printouts because the selected paper size is unavailable for stapling.

Remedy Use the suitable paper size for stapling. (See Chapter 2, “Advanced Operations,” in the *Copying Guide*.)

This size cannot be offset

Cause The machine cannot offset the printouts because the selected paper size is unavailable for offset copying.

Remedy Use the suitable paper size for offset copying. (See Chapter 2, “Advanced Operations,” in the *Copying Guide*.)

Toner low/Prepare new toner

Cause Toner is running out.

Remedy Rock the toner cartridge to redistribute the toner evenly inside the cartridge. If the message persists, install a new cartridge.

Tray A full/Remove paper

Cause Tray A is full of paper.

Remedy Remove the prints from Tray A. (See “Inner 2 Way Tray-E2,” on p. 5-10.)

Tray B full/Remove paper

Cause Tray B is full of paper.

Remedy Remove the prints from Tray B. (See “Inner 2 Way Tray-E2,” on p. 5-10.)

Waste toner full/Prepare drum

Cause Waste toner is full in the drum.

Remedy Replace the drum unit. (See “Replacing the Drum Unit,” on p. 6-16)

Service Call Message

If the machine malfunctions, a service call message appears on the LCD display.

Examples: E000, E100

Contacting Your Local Authorized Canon Dealer

If a service call message appears on the LCD display, follow the procedure described below to solve the problem.

WARNING

Do not connect or disconnect the power cord with wet hands, as this may result in electrical shock.

CAUTION

Always grasp the power plug portion when disconnecting the power cord. Pulling on the cord may expose or snap the core wire or otherwise damage the power cord. If the power cord is damaged, this could cause current to leak, resulting in a fire or electrical shock.

IMPORTANT

If the main power switch is turned OFF, all jobs waiting in the memory will be erased.

1

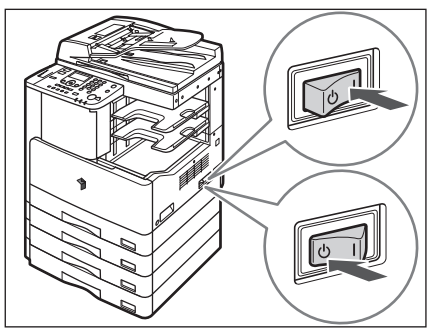

Turn the main power switch OFF. Wait at least 10 seconds before turning the main power switch back ON.

2

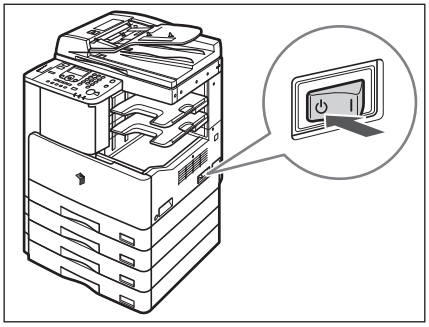

If the machine still does not operate normally, follow the procedure below, and contact your local authorized Canon dealer.

- ❑ Turn OFF the main power.
- ❑ Disconnect the power cord from the wall outlet.

NOTE

When contacting your local authorized Canon dealer, have the following information available:

- Model name
- Problem and status of the machine
- Service call message on the LCD display

Appendix

8
CHAPTER

This chapter provides the specifications of the main unit and the optional equipment, and other useful information.

Additional Functions Settings Table 8-2

Sample Reports 8-7

- Department ID List 8-7
- User's Data List 8-7

Specifications 8-8

- Main Unit 8-8
- Feeder (DADF-P2) 8-10
- Cassette Feeding Module-J1 8-11
- Cassette Feeding Module-K1 8-11
- Finisher-U2 8-12
- Duplex Unit-A1 8-13
- Inner 2 Way Tray-E2 8-13

Relationship between Original Orientation and Preprinted Paper Output Chart 8-14

Multifunctional Operations 8-16

Available Paper Stock 8-17

Index 8-19

Additional Functions Settings Table

The tables below lists the settings that can be selected or stored from the Additional Functions menu. Some functions can only be used when optional equipment is attached. For more information on the Copy, Printer, and Network Settings, see the following guides:

- Copy Settings: *Copying Guide*
- Printer Settings: *UFR II Printer Guide*
- Network Settings: *Network Guide*

■ Audible Tones

Additional Functions	Settings	Applicable Page
Entry Tone	Off, **On**	p. 3-3
Error Tone	Off, **On**	
Scan Done Tone	Off, On, **For Error Only**	
Print Done Tone	Off, On, **For Error Only**	

The default settings are indicated in bold.

■ Common Settings

Additional Functions	Settings	Applicable Page
Initial Function	**Copy**, Scan	p. 3-5
Contrast	-2 to +2; **±0**	p. 3-6
Invert Screen Colors	**Off**, On	p. 3-7
Auto Clear Setting	**Initial Function**, Selected Function	p. 3-8
Toner Save Mode	**Off**, Low, High	p. 3-9
Printer Density	-4 to +4; **±0**	p. 3-10

The default settings are indicated in bold.

■ Common Settings Continued

Additional Functions	Settings	Applicable Page
Auto Drawer Select	Copy: Stack Bypass: **Off**, On Drawer 1: Off, **On** Drawer 2*: Off, **On** Drawer 3*: Off, **On** Drawer 4*: Off, **On** Printer: Drawer 1: Off, **On** Drawer 2*: Off, **On** Drawer 3*: Off, **On** Drawer 4*: Off, **On** Other: Stack Bypass: **Off**, On Drawer 1: Off, **On** Drawer 2*: Off, **On** Drawer 3*: Off, **On** Drawer 4*: Off, **On**	p. 3-11
Register Paper Type	Drawer 1: **Plain**, Recycled, Color, Bond, Heavy Paper 1 Drawer 2*: **Plain**, Recycled, Color, Bond, Heavy Paper 1 Drawer 3*: **Plain**, Recycled, Color, Bond, Heavy Paper 1 Drawer 4*: **Plain**, Recycled, Color, Bond, Heavy Paper 1	p. 3-13
Tray Designation*	Tray A: Copy: Off, **On** Printer: Off, **On** Other: Off, **On** Tray B: Copy: Off, **On** Printer: Off, **On** Other: Off, **On**	p. 3-15

The default settings are indicated in bold.
* Indicates items that are available only when the appropriate optional equipment is attached to the machine.

■ Common Settings Continued

Additional Functions	Settings	Applicable Page
Stand. Stack Bypass.	**Off**, On: Paper Size: **A4**, A4R, A3, A5, A5R, B4, B5, B5R, Custom Size, COM10, Monarch, DL, ISO-C5, ISO-B5, LTR, LTRR, LGL, STMT, STMTR, EXEC, 11 × 17 Paper Type: **Plain**, Recycled, Color, Bond, Heavy Paper 1, Heavy Paper 2, Heavy Paper 3, Transparency, Labels	p. 3-17
Paper Feed Switch	Stack Bypass: **Speed Priority**, Print Side Drawer 1: **Speed Priority**, Print Side Drawer 2*: **Speed Priority**, Print Side Drawer 3*: **Speed Priority**, Print Side Drawer 4*: **Speed Priority**, Print Side	p. 3-20
Language Switch	Bulgarian, Catalan, Croatian, Czech, Danish, Dutch, **English**, Estonian, Finnish, French, German, Greek, Hungarian, Italian, Norwegian, Polish, Portuguese, Romanian, Russian, Slovak, Slovene, Spanish, Swedish, Turkish	p. 3-22
Dirty Feeder Error*	Off, **On**	p. 3-23
Remote Scan Compress*	High Ratio, **Normal**, Low Ratio	p. 3-24
Remote Scan Gamma*	Gamma 1.0, Gamma 1.4, **Gamma 1.8**, Gamma 2.2	p. 3-26
Inch/Millimeter Switch	**mm**, inch	p. 3-27
Paper Size Group	AB, inch, **A**	p. 3-28
Initialize Common	Select <Yes> or <No>.	p. 3-29

The default settings are indicated in bold.
* Indicates items that are available only when the appropriate optional equipment is attached to the machine.

■ Copy Settings

See the *Copying Guide*.

■ Printer Settings

See the *UFR II Printer Guide*.

■ Timer Settings

Additional Functions	Settings	Applicable Page
Auto Sleep Time*	Off, **On** (3 to 30 minutes; **5 min** in one minute increments)	p. 3-30
Auto Clear Time	Off, **On** (1 to 9 minutes; **2 min** in one minute increments)	p. 3-31
Auto Shutdown Time	Off, **On** (1 to 8 hours; **4 hr** in one hour increments)	p. 3-33

The default settings are indicated in bold.
* It is recommended to use the factory-installed settings for this item.

■ Adjustment/Cleaning

Additional Functions	Settings	Applicable Page
Clean Trans. Roller	Select <Yes> or <No>.	p. 6-30
Drum Cleaning	Select <Yes> or <No>.	p. 6-31
Fixing Unit Cleaning	Select <Yes> or <No>.	p. 6-31
Feeder Cleaning*	Select <Yes> or <No>.	p. 6-29
Bond Sp. Processing	**Off**, On	p. 3-35
Special Mode M	Low, **Standard**, High	p. 3-36
Special Mode N	**Off**, On	p. 3-37
Special Mode O	Stack Bypass: **Off**, On Drawer: **Off**, On	p. 3-38
Special Mode P	**Off**, On	p. 3-40
Special Mode S	**Off**, Speed Priority 1, Speed Priority 2	p. 3-41
Rotate Collate Adj.	**Speed Priority 1**, Speed Priority 2, Image Priority	p. 3-42
Dirty Feeder Adj.*	Off, **On**	p. 3-43

The default settings are indicated in bold.
* Indicates items that appear only when the appropriate optional equipment is attached to the machine.

■ Report Settings

Additional Functions	Settings	Applicable Page
Print List	User's Data List: Select <Yes> or <No>.	p. 3-44

■ System Settings

Additional Functions	Settings	Applicable Page
System Manager Set.	System Manager ID, System Manager	p. 4-2
Device Info Settings	Device Name, Location	p. 4-6
Dept. ID Management	**Off**, On: Reg./Edit Dept. ID: Department ID, Password, Limit Settings, Erase Page Totals: View Page Totals, Clear All Totals, Print List Allow Unkn. ID Print*: Off, **On** Allow Unkn. ID Scan*: Off, **On**	p. 4-8
User ID Management*	**Off**, On	p. 4-30
Network Settings*	TCP/IP Settings, SNMP Settings, Ethernet Driver, Startup Time Set.	See the *Network Guide*.
Remote UI On/Off*	Off, **On**	p. 4-32
Job Log Display	Off, **On**	p. 4-34
Use USB Device	Off, **On**	p. 4-36
Update Firmware	This function is only used when the firmware needs to be updated.	-

The default settings are indicated in bold.
* Indicates items that are available only when the appropriate optional equipment is attached to the machine.

Sample Reports

Department ID List

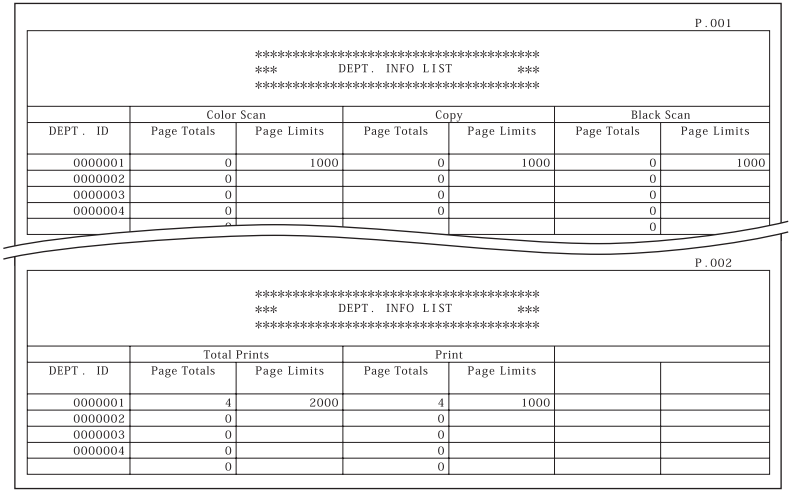

P.001

****
*** DEPT. INFO LIST ***
****

	Color Scan		Copy		Black Scan	
DEPT. ID	Page Totals	Page Limits	Page Totals	Page Limits	Page Totals	Page Limits
0000001	0	1000	0	1000	0	1000
0000002	0		0		0	
0000003	0		0		0	
0000004	0		0		0	
	0				0	

P.002

****
*** DEPT. INFO LIST ***
****

	Total Prints		Print			
DEPT. ID	Page Totals	Page Limits	Page Totals	Page Limits		
0000001	4	2000	4	1000		
0000002	0		0			
0000003	0		0			
0000004	0		0			
	0		0			

User's Data List

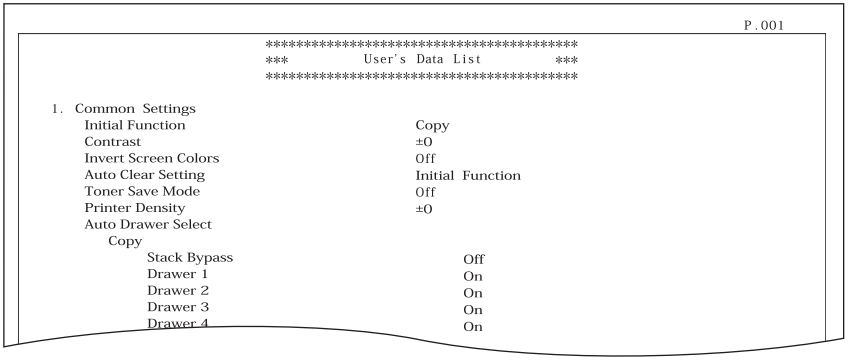

P.001

****
*** User's Data List ***
****

1. Common Settings
   - Initial Function: Copy
   - Contrast: ±0
   - Invert Screen Colors: Off
   - Auto Clear Setting: Initial Function
   - Toner Save Mode: Off
   - Printer Density: ±0
   - Auto Drawer Select
     - Copy
       - Stack Bypass: Off
       - Drawer 1: On
       - Drawer 2: On
       - Drawer 3: On
       - Drawer 4: On

Specifications

Specifications are subject to change without notice for product improvement or future release.

Main Unit

Item	Specification
Name	Canon imageRUNNER 2422/2420
Type	Desktop
Platen Type	Stationary
Photoconductive Material	OPC (Organic Photo Conductor)
Copying System	Indirect electrostatic copying
Developing System	Single component dry toner projection development system
Fixing System	On-demand Fusing
Resolution	Reading 600 × 600 dpi Printing 600 × 600 dpi
Number of Tones	256
Acceptable Paper Stock	Paper Drawers: 64 g/m^2 to 90 g/m^2 Plain, Recycled, Color (64 g/m^2 to 80 g/m^2), Bond (75 g/m^2 to 90 g/m^2), Heavy Paper 1 (81 g/m^2 to 90 g/m^2) Stack Bypass: 64 g/m^2 to 128 g/m^2 Plain, Recycled, Color (64 g/m^2 to 80 g/m^2), Bond (75 g/m^2 to 90 g/m^2), Heavy Paper 1 (81 g/m^2 to 90 g/m^2), Heavy Paper 2 (91 g/m^2 to 105 g/m^2), Heavy Paper 3 (106 g/m^2 to 128 g/m^2), Transparencies, Labels, Envelopes (ISO-B5, ISO-C5, COM10, DL, Monarch)
Acceptable Originals	Sheet, Book, 3-dimensional objects (Up to approx. 40 mm or 2 kg)
Maximum Original Size	A3

Item	Specification
Paper Sizes	Paper Drawers: A4, A4R, A3, A5 Stack Bypass: A4, A4R, A3, A5, A5R Irregular size (95 mm × 148 mm to 297 mm × 432 mm), Envelopes (ISO-B5, ISO-C5, COM10, DL, Monarch)
Margin Areas (one-sided or two-sided printing)	Top Margin: 3.0 mm or less* Left and Right Margins: 3.0 mm or less* Bottom Margins: 5.0 mm or less * A 5 mm margin is applied as default for print jobs.
Warm-Up Time	When the main power is turned ON: 13 seconds or less When the machine wakes from the Sleep mode: 1 second or less (Temperature: 20 °C) Warm-up time may vary depending on the condition and environment around the machine.
First Copy Time	Using the platen glass: 7.9 seconds or less (A4, direct, paper drawer 1)
Copy Speed (Except when paper is fed from the stack bypass)	Sheets per minute imageRUNNER 2422 Direct A4 22 A4R 11 A3 11 A5 23 imageRUNNER 2420 Direct A4 20 A4R 11 A3 10 A5 23
Magnification	Direct 1:1 (±0.5%) Reduction 1:0.70 (A3 → A4) 1:0.50 (A3 → A5) 1:0.25 (MIN.) Enlargement 1:1.41 (A4 → A3) 1:2.00 (A5 → A3) 1:4.00 (MAX.)
Paper Feeding System	Paper Drawers: 250 sheets per drawer (80 g/m^2) Stack Bypass: 80 sheets (A4/A4R/A5/A5R, 80 g/m^2) 50 sheets (A3, 80 g/m^2) 50 sheets (Transparencies; Heavy Paper 2, 91 g/m^2 to 105 g/m^2) 35 sheets (A4/A4R/A3, 106 g/m^2 to 128 g/m^2) 10 envelopes 1 sheet (Labels)

Item	Specification
Output Orientation	Face down
Density Control	Automatic or manual (9 levels)
Multiple Copies	1 to 99 sheets
Power Source	220 - 240 V AC, 50/60 Hz, 2.7 A
Power Consumption	Maximum power consumption: Approx. 1.373 kW When the machine is in the Sleep mode: 4.5 W When the main power switch is turned OFF: 0.1 W or less
Dimensions (W × D × H)	622 mm × 638 mm × 580.4 mm (one drawer with a platen cover attached) 622 mm × 676 mm × 672 mm (one drawer with a feeder attached)
Installation Space (W × D)	1,247 mm* × 1,249 mm (the optional Finisher-U2 and Document Tray-J1 attached.) * The width is 1,018 mm when no options are attached.
Weight	Approx. 37.9 kg (one drawer with a platen cover attached) Approx. 43.9 kg (one drawer with a feeder attached)

Feeder (DADF-P2)

Item	Specification
Type	Automatic Document Feeder
Originals	A4, A4R, A3, A5, A5R
Original Paper Weights	52 g/m^2 to 105 g/m^2 (One-page scanning for 37 g/m^2 to 52 g/m^2 and 105 g/m^2 to 128 g/m^2)
Original Tray Capacity	A4/A4R/A5/A5R: 50 sheets (80 g/m^2) A3: 25 sheets (80 g/m^2)
Original Replacement Speed	20 sheets/minute (A4)
Power Source	From main unit
Power Consumption	Approx. 26 W max.
Dimensions (W × D × H)	565 mm × 489.4 mm × 122 mm
Weight	Approx. 7.0 kg

Cassette Feeding Module-J1

Item	Specification
Paper Sizes	A4, A4R, A3, A5
Paper Capacity	250 sheets × 1 drawer (80 g/m^2)
Power Source	From main unit
Power Consumption	Approx. 4 W max.
Dimensions (W × D × H)	580.3 mm × 569.3 mm × 116.8 mm
Weight	Approx. 6.0 kg

Cassette Feeding Module-K1

Item	Specification
Paper Sizes	A4, A4R, A3, A5
Paper Capacity	250 sheets × 2 drawers (80 g/m^2)
Power Source	From main unit
Power Consumption	Approx. 14 W max.
Dimensions (W × D × H)	580.3 mm × 569.3 mm × 201.8 mm
Weight	Approx. 12.0 kg

Finisher-U2

Item	Specification
Paper	64 g/m^2 to 128 g/m^2
Capacity Per Tray	Standard type Non-collate A4/A5/A5R: 770 sheets or 100 mm A4R/A3: 380 sheets or 50 mm Collate mode A4: 770 sheets or 100 mm A4R/A3: 380 sheets or 50 mm Staple mode A4: 30 sets or 100 mm A4R/A3: 30 sets or 50 mm Additional Finisher Tray-C1 is attached Non-collate A4/A5/A5R: 200 sheets or 26 mm A4R/A3: 150 sheets or 13 mm Collate mode A4: 200 sheets or 26 mm A4R/A3: 150 sheets or 13 mm Staple mode A4: 30 sets or 26 mm A4R/A3: 30 sets or 13 mm
Max. Stapling Capacity/ Available Staple Size	A4: 50 sheets (64 g/m^2 to 80 g/m^2) A4R/A3: 30 sheets (64 g/m^2 to 80 g/m^2) * Corner Staple only
Available Staple Size	A4, A4R, A3
Available Offset Size	A4, A4R, A3
Power Source	From main unit
Power Consumption	Approx. 46 W max.
Dimensions (W × D × H)	460 mm × 520 mm × 300 mm
Installation Space (W × D)	1,065 mm × 755 mm (when the stack bypass and the auxiliary tray of the Additional Finisher Tray-C1 are extended)
Weight	Approx. 10 kg

Duplex Unit-A1

Item	Specification
Paper Sizes	A4, A4R, A3, A5R
Paper Weight	64 g/m^2 to 90 g/m^2
Power Source	From main unit
Power Consumption	Approx. 21 W max.
Dimensions (W × D × H)	437.2 mm × 448 mm × 378.3 mm
Weight	Approx. 2.5 kg

Inner 2 Way Tray-E2

Item	Specification
Capacity	Tray A: A4: 100 sheets (80 g/m^2) Other Sizes: 50 sheets (80 g/m^2) Tray B: A4: 250 sheets (80 g/m^2) Other Sizes: 100 sheets (80 g/m^2)
Power Source	From main unit
Power Consumption	Approx. 5 W max.
Dimensions (W × D × H)	485.5 mm × 451 mm × 151.2 mm
Installation Space (W × D)	Incorporated in the main unit
Weight	Approx. 1.5 kg

Relationship between Original Orientation and Preprinted Paper Output Chart

Please use this chart when printing on preprinted paper (i.e., paper with logos).

IMPORTANT

Do not load the following types of paper into the paper drawers, as this may cause paper jams:

- Paper on which color images have been copied (Do not copy on the reverse side either).

NOTE

If you want to copy on the back side of preprinted paper, place the side you want to copy on:

- face up when using a paper drawer
- face down when using the stack bypass

■ If You Want to Set the Staple Mode:

Original/Paper Orientation, Settings \ Staple Position / Output Example		Corner: Top Left A4	Corner: Top Left A4R	Corner: Top Left A3
Preprinted Paper	Orientation in paper drawer Preprinted side: Face up		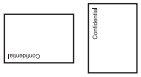	
	Orientation in stack bypass Preprinted side: Face down		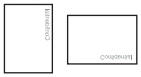	
Original	Orientation on the platen glass Original side: Face down	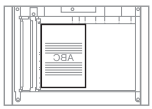	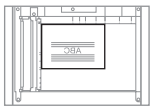	
	Orientation in the feeder Original side: Face up	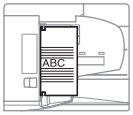	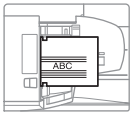	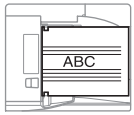
Auto Orientation Setting		Either On or Off	Either On or Off (Set to 'On' when paper orientation in the stack bypass/paper drawer is vertical.)	Either On or Off

■ If You Do Not Want to Set the Staple Mode:

Original/ Paper Orientation, Settings \ Output Example		A4	A4R	A3
Preprinted Paper	Orientation in paper drawer Preprinted side: Face up		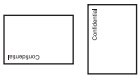	
	Orientation in stack bypass Preprinted side: Face down		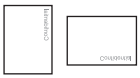	
Original	Orientation on the platen glass Original side: Face down	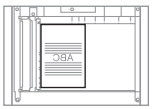	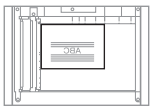	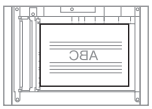
	Orientation in the feeder Original side: Face up	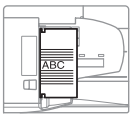	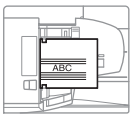	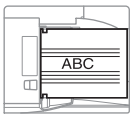
Auto Orientation Setting		Either On or Off	Either On or Off (Set to 'On' when paper orientation in the stack bypass/paper drawer is vertical.)	Either On or Off

Multifunctional Operations

The imageRUNNER 2422/2420 offers the user multiple functions, such as printing, scanning, and copying, which can be used together. The following table provides you with the details of multifunctional operations.

■ How to read the table

The table below indicates the availability of the operations listed in the horizontal rows when the operations listed in the vertical columns are already being performed.

Example:

When copying is in progress, you can scan originals for a copy job.

NOTE

The machine's performance may be affected if image processing, such as compression, enlargement/reduction, or rotation, are being carried out when the machine receives print data.

■ Status Description

Print:

•Copy: A copy job is being printed.

•Print Data: A print or report job is being printed via a network or the USB port.

Scan:

•Copy: A copy job is being scanned.

√: Available N/A: Not Available

Current Jobs \ Next Jobs		Print		Scan
		Copy	Print Data	Copy
Print	Copy	N/A	N/A	√
	Print Data	N/A	N/A	√
Scan	Copy	N/A	N/A	N/A

Available Paper Stock

The paper types that can be used with this machine are shown below. The paper type loaded in each paper drawer can be displayed if you register that information in the machine beforehand. (See "Identifying the Type of Paper in a Paper Source," on p. 3-13.)

✓: Available N/A: Not Available

Paper Type	Paper Source	
	Paper Drawer (64 g/m^2 to 90 g/m^2)	Stack Bypass (64 g/m^2 to 128 g/m^2)
Plain[*1]	✓	✓
Recycled[*1]	✓	✓
Color[*1]	✓	✓
Bond[*2]	✓	✓
Heavy Paper 1[*3]	✓	✓
Heavy Paper 2[*4]	N/A	✓
Heavy Paper 3[*5]	N/A	✓
Transparency[*6]	N/A	✓
Envelopes	N/A	✓
Labels	N/A	✓

*1 From 64 g/m^2 to 80 g/m^2.

*2 From 75 g/m^2 to 90 g/m^2.

*3 From 81 g/m^2 to 90 g/m^2.

*4 From 91 g/m^2 to 105 g/m^2.

*5 From 106 g/m^2 to 128 g/m^2.

*6 Use only A4 transparencies made especially for this machine.

IMPORTANT

When printing on the back side of printed paper, use Special Mode O to prevent paper jams. (See "Preventing Paper Jams when Printing on the Back Side of Printed Paper," on p. 3-38.)

✓: Available N/A: Not Available

Paper Size		Width × Length	Paper Source		
			Paper Drawer 1	Paper Drawers 2, 3, 4	Stack Bypass
A4		297 mm × 210 mm	✓	✓	✓
A4R		210 mm × 297 mm	✓	✓	✓
A3		297 mm × 420 mm	✓	✓	✓
A5		210 mm × 148 mm	✓	✓	✓
A5R		148 mm × 210 mm	N/A	N/A	✓
Envelope	**COM10 (#10)**	104.7 mm × 241.3 mm	N/A	N/A	✓
	Monarch	98.4 mm × 190.5 mm	N/A	N/A	✓
	DL	110 mm × 220 mm	N/A	N/A	✓
	ISO-B5	176 mm × 250 mm	N/A	N/A	✓
	ISO-C5	162 mm × 229 mm	N/A	N/A	✓
Free Size		95 mm × 148 mm to 297 mm × 432 mm	N/A	N/A	✓

NOTE

- For instructions on loading paper, see the following sections:
  - Paper Drawers: “Loading Paper,” on p. 6-2
  - Stack Bypass: “Feeding Paper Using the Stack Bypass,” on p. 2-25
- Paper drawers 2, 3, and 4 are optional for the imageRUNNER 2422/2420.
- Chlorine-free paper can be used with this machine.

Index

Numerics

2-Page Separation Key, 1-13
2-Sided Key, 1-13
2-Sided Printing, 2-33

A

Abbreviations Used in This Manual, xiv
Additional Finisher Tray-C1, 5-6
Additional Functions
  Adjustment/Cleaning, 8-5
  Audible Tones, 8-2
  Common Settings, 8-2
  Copy Settings, 8-4
  Printer Settings, 8-5
  Report Settings, 8-6
  System Settings, 8-6
  Timer Settings, 8-5
Additional Functions Key, 1-12
Adjusting/Cleaning the Machine
  Adjusting Output Speed in the Rotate + Collate Mode, 3-42
  Adjusting the Machine, 3-35
  Adjustment/Cleaning, 8-5
  Automatic Feeder Cleaning, 6-29
  Feeder Smudge Adjustment, 3-43
  Improving Print Quality and Density, 3-36
  Manual Feeder Cleaning, 6-26
  Preventing Paper Curl Due to Paper Type, 3-40
  Preventing Paper Curl or Jams Caused by a High-humidity Environment, 3-37
  Preventing Paper Jams when Printing on the Back Side of Printed Paper, 3-38
  Reducing Wait Time for the Next Job, 3-41
  Setting the Fixing Mode for Bond Paper, 3-35
Audible Tones, 3-3
Auto Clear, 3-8
Auto Clear Time, 3-31
Auto Drawer Selection, 3-11
Auto Drawer Switching, 3-11
Auto Paper Selection, 3-11
Auto Shutdown Time, 3-33
Auto Sleep Time, 3-30
Auxiliary Tray, 2-27, 5-6
Available Combination of Options, 5-4
Available Features, xv

B

Back Key, 1-12
Bond Paper, 8-17

C

Canceling a Job, 2-39
Cassette Feeding Module
  Paper Drawer 1, 7-8
  Paper Drawers 2, 3, and 4, 7-12
Cassette Feeding Module-J1, 1-10
Cassette Feeding Module-K1, 1-10
Checking Job Status and Log, 2-37
Cleaning
  Automatic Feeder Cleaning, 6-29
  Drum Cleaning, 6-31
  Fixing Unit Cleaning, 6-31
  Manual Feeder Cleaning, 6-26
  Offset Roller Cleaning, 6-36
  Platen Glass and Cover, 6-25
  Routine Cleaning, 6-24
  Transcription Roller Cleaning, 6-30
Clear Key, 1-12
Clearing Page Totals, 4-25
Color Paper, 8-17

Common Settings
Auto Clear Setting, 3-8
Auto Drawer Select, 3-11
Dirty Feeder Error, 3-23
Inch/Millimeter, 3-27
Initial Function, 3-5
Initialize Common, 3-29
Language Switch, 3-22
Paper Feed Switch, 3-20
Paper Size Group, 3-28
Printer Density, 3-10
Register Paper Type, 3-13
Remote Scan Compress, 3-24
Remote Scan Gamma, 3-26
Stand. Stack Bypass, 3-17
Toner Save Mode, 3-9
Tray Designation, 3-15
Consumables
Paper Stock, 6-37
Toner, 6-38
Control Panel, 1-10, 1-12
Control Panel Power Switch, 1-12, 1-16
COPY Key, 1-12
Copy Ratio Key, 1-13
Copy Settings, 8-4
Copying, Definition of, xvii
Counter Information, 4-20
Counters, 1-11

D

Data Compression Ratio for Remote Scans, 3-24
Default Display after Auto Clear, 3-8
Default Settings, 3-29
Density Key, 1-13
Department ID, 2-10
Department ID Management, 2-10, 4-8, 4-9
Accepting Print Jobs with Unknown IDs, 4-26
Accepting Scan Jobs with Unknown IDs, 4-28
Changing or Erasing the Department ID, Password, and Page Limit, 4-17
Checking Counter Information, 4-20
Clearing Page Totals, 4-25
Printing Counter Information, 4-23
Registering the Department ID, Password, and Page Limit, 4-10
Device Information Settings, 4-6
Device Name, 4-6
Different Paper Size, 6-6
Different Size Originals Key, 1-13
Dirty Feeder Error Message Prompt, 3-23
Display language, 3-22
Drum Unit, 1-11, 6-16
Duplex Unit-A1, 1-11, 2-33
Clearing Paper Jams, 7-17
Specifications, 8-13

E

Entering a User ID and Password, 2-12
Entering Characters, 2-6
Entering the Department ID and Password, 2-10
Envelope, 2-26, 8-17
Error Indicator, 1-13
Error Messages, 7-31
External View, 1-9

F

Feeder (DADF-P2), 1-10, 2-14
Clearing Paper Jams, 7-19
Feeder Cover, 5-5
Original Output Area, 5-5
Original Supply Tray, 5-5
Slide Guides, 5-5
Specifications, 8-10
Feeder Cover, 5-5
Feeding Paper
Stack Bypass, 2-25
Finisher-U2
Additional Finisher Tray-C1, 5-6
Auxiliary Tray, 5-6
Clearing Paper Jams, 7-23
Clearing Staple Jams, 7-28
Finishing Modes, 5-7
Front Cover, 5-6
Output Tray, 5-6
Replacing the Staple Cartridge, 6-21

Specifications, 8-12
Finishing Key, 1-13
Finishing Modes, 5-7
Fixing Unit, 1-11
Clearing Paper Jams, 7-5
Frame Erase Key, 1-13
Free Size, 2-26
Front Cover, 5-6
Main Unit, 1-11

H

Handling Precautions, 1-7
Heavy Paper, 8-17

I

ID Key, 1-12
Illustrations Used in This Manual, xiii
Image Combination Key, 1-13
Image Quality Key, 1-13
Inch and Millimeter, 3-27
Initial Function, 3-5
Initial Function at Power ON, 3-5
Inner 2 Way Tray-E2
Clearing Paper Jams, 7-25
Specifications, 8-13
Tray A, 3-15, 5-10
Tray B, 3-15, 5-10
Installation
Installation Space, 1-5
Location and Handling, 1-2
Power Supply, 1-4
Precautions, 1-2
Internal View, 1-11

K

Keys and Buttons Used in This Manual, xiii

L

Labels, 8-17
Language Switch, 3-22
LCD display, 1-12
Left Cover
Main Unit, 1-11
Loading Paper, 6-2
Paper Drawers, 6-2
Location, 4-7

M

Main Power, 1-14
Main Power Indicator, 1-13
Main Power Switch, 1-10
Moving the Machine, 1-6
Multifunctional Operations, 8-16

N

Numeric Keys, 1-12

O

Offset + Collate, 5-9
Offset + Group, 5-9
Offset Roller Cleaning, 6-36
OK Key, 1-13
On-Screen Instruction, 7-3
Optional Equipment
Additional Finisher Tray-C1, 5-3
Cassette Feeding Module-J1, 5-3, 5-11, 8-11
Cassette Feeding Module-K1, 5-3, 5-11, 8-11
Document Tray-J1, 5-3
Duplex Unit-A1, 5-3
Feeder (DADF-P2), 5-3, 5-5
Finisher-U2, 5-3, 5-6
Inner 2 Way Tray-E2, 5-3, 5-10
Original Orientation, 8-14
Original Output Area, 5-5
Original Supply Tray, 5-5
Output Tray, 5-6

P

Page Totals, 4-25
Paper Drawer's Left Cover, 1-11
Paper Drawers, 1-10
  Adjusting a Paper Drawer to Hold a Different Paper Size, 6-6
  Clearing Paper Jams, 7-8, 7-12
  Loading Paper, 6-2
Paper Feed Switch, 3-20
Paper Jams
  Duplex Unit-A1, 7-17
  Feeder (DADF-P2), 7-19
  Finisher-U2, 7-23
  Fixing Unit, 7-5
  Inner 2 Way Tray-E2, 7-25
  Paper Drawer 1, 7-8
  Paper Drawers 2, 3, and 4, 7-12
  Reducing the Frequency of Paper Jams, 7-2
  Stack Bypass, 7-16
Paper Select Key, 1-13
Paper Size Group, 3-28
Paper Stock
  Available Paper Stock, 8-17
  Paper Size, 8-18
  Paper Type, 8-17
Parts and Functions of the Main Unit
  External View, 1-9
  Internal View, 1-11
Password, 2-10, 2-12
Plain Paper, 8-17
Platen Cover Type J, 1-10
Platen Glass, 1-11, 2-14, 2-16
Platen Glass and Cover, 6-25
Printer Density, 3-10
Printer Settings, 8-5
Printing, 2-33
Printing Counter Information, 4-23
Printing, Definition of, xvii
Processing/Data Indicator, 1-13

R

Recycled Paper, 8-17
Register Paper Type, 3-13
Remote Scan, 2-34
Remote UI, 4-32
Report Settings, 8-6
Reset Key, 1-12
Restoring Defaults, 3-29
Routine Cleaning, 6-24

S

Safety Instructions
  Consumables, xxxii
  Handling, xxvii
  Installation, xxv
  Maintenance and Inspections, xxx
  Other Warnings, xxxii
  Power Supply, xxvi
SCAN Key, 1-12
Scanning Area, 1-11
Scanning, Definition of, xvi
Service Call Message, 7-37
Setting the Gamma Value for Remote Scans, 3-26
Sleep Mode, 1-16
Slide Guides, 5-5
  Feeder, 2-19
  Stack Bypass, 2-27
Specifications
  Duplex Unit-A1, 8-13
  Feeder (DADF-P2), 8-10
  Finisher-U2, 8-12
  Inner 2 Way Tray-E2, 8-13
  Main Unit, 8-8
Stack Bypass, 1-10, 2-25
  Auxiliary Tray, 2-27
  Clearing Paper Jams, 7-16
  Slide Guides, 2-27
  Tray Extension, 2-27
Standard Paper for the Stack Bypass, 3-17
Standard Size, 2-26
Standby Display
  Copy Mode, 1-17
  Network Scan Mode, 1-17

Staple, 5-7
Start Key, 1-12
Stop Key, 1-12
Symbols Used in This Manual, xii
System Configuration, 5-2
System Manager ID, 4-2
System Manager's Name, 4-4
System Monitor, 2-37, 2-40
System Monitor Key, 1-12
System Password, 4-2
System Settings
  Dept. ID Management, 4-9
  Device Info Settings, 4-6
  Remote UI On/Off, 4-32
  System Manager, 4-4
  System Manager ID, 4-2
  System Manager Settings, 4-2
  System Password, 4-2
  Use USB Device, 4-36
  User ID Management, 4-30

T

Timer Settings
  Auto Clear Time, 3-31
  Auto Shutdown Time, 3-33
  Auto Sleep Time, 3-30
Tone Key, 1-12
Tone Settings, 3-3
Toner Cartridge, 1-11, 6-10
Toner Consumption, 3-9
Toner Save Mode, 3-9
Transparency, 8-17
Tray A, 3-15, 5-10
Tray B, 3-15, 5-10
Tray Designation, 3-15
Tray Extension, 2-27
Troubleshooting
  Clearing Paper Jams, 7-3
  Clearing Staple Jams, 7-28
  Error Messages, 7-31
  Service Call Message, 7-37
TWAIN, 2-34

U

Unknown ID, 4-26, 4-28
USB Interface Port, 4-36
Use USB Device, 4-36
User ID, 2-12, 4-30
User ID Management, 2-12, 4-30
User's Data List, 3-44

V

View Settings Key, 1-12

Canon

CANON INC.
30-2, Shimomaruko 3-chome, Ohta-ku, Tokyo 146-8501, Japan
CANON U.S.A., INC.
One Canon Plaza, Lake Success, NY 11042, U.S.A.
CANON CANADA INC.
6390 Dixie Road Mississauga, Ontario L5T 1P7, Canada
CANON EUROPA N.V.
Bovenkerkerweg 59-61 1185 XB Amstelveen, The Netherlands
(See http://www.canon-europe.com/ for details on your regional dealer)
CANON LATIN AMERICA, INC.
703 Waterford Way Suite 400 Miami, Florida 33126 U.S.A.
CANON AUSTRALIA PTY. LTD
1 Thomas Holt Drive, North Ryde, Sydney, N.S.W. 2113, Australia
CANON CHINA CO., LTD
15F Jinbao Building No.89 Jinbao Street, Dongcheng District, Beijing 100005, China
CANON SINGAPORE PTE. LTD.
1 HarbourFront Avenue #04-01 Keppel Bay Tower, Singapore 098632
CANON HONGKONG CO., LTD
19/F., The Metropolis Tower, 10 Metropolis Drive, Hunghom, Kowloon, Hong Kong

USRM2-1997-00
© CANON INC. 2012